Tektronix

# Service Manual

Tektronix

# VM700A
# Video Measurement Set

## 070-8165-00

**Warning**
The servicing instructions are for use by qualified personnel only. To avoid personal injury, do not perform any servicing unless you are qualified to do so. Refer to the Safety Summary prior to performing service.

**Please check for change information at the rear of this manual.**

First Printing July 1991
Revised May 1993

Copyright © 1991 Tektronix, Inc. All rights reserved. Printed in U.S.A. Tektronix products are covered by U.S. and foreign patents, issued and pending. Information in this publication supersedes that in all previously published material. Specification and price change privileges reserved.

TEKTRONIX, TEK, PLOT 10, TEKTEST, and SCOPE-MOBILE are registered trademarks.

For further information, contact: Tektronix, Inc., Corporate Offices, P.O. Box 1000, Wilsonville, OR 97070-1000. Phone: (503) 627–7111; TLX: 192825; TWX: (910) 467–8708; Cable: TEKWSGT.

Subsidiaries and distributors worldwide.

# WARRANTY

Tektronix warrants that this product that it manufactures and sells will be free from defects in materials and workmanship for a period of one (1) year from the date of shipment. If any such product proves defective during this warranty period, Tektronix, at its option either will repair the defective product without charge for parts and labor, or will provide a replacement in exchange for the defective product.

In order to obtain service under this warranty, Customer must notify Tektronix of the defect before the expiration of the warranty period and make suitable arrangements for the performance of service. Customer shall be responsible for packaging and shipping the defective product to the service center designated by Tektronix, with shipping charges prepaid. Tektronix shall pay for the return of the product to Customer if the shipment is to a location within the country in which the Tektronix service center is located. Customer shall be responsible for paying all shipping charges, duties, taxes, and any other charges for products returned to any other locations.

This warranty shall not apply to any defect, failure or damage caused by improper use or improper or inadequate maintenance and care. Tektronix shall not be obligated to furnish service under this warranty a) to repair damage resulting from attempts by personnel other than Tektronix representatives to install, repair or service the product; b) to repair damage resulting from improper use or connection to incompatible equipment; c) to service a product that has been modified or integrated with other products when the effect of such modification or integration increases the time or difficulty of servicing the product.

THIS WARRANTY IS GIVEN BY TEKTRONIX WITH RESPECT TO THIS PRODUCT IN LIEU OF ANY OTHER WARRANTIES, EXPRESS OR IMPLIED. TEKTRONIX AND ITS VENDORS DISCLAIM ANY IMPLIED WARRANTIES OF MERCHANTABILITY OR FITNESS FOR A PARTICULAR PURPOSE. TEKTRONIX' RESPONSIBILITY TO REPAIR OR REPLACE DEFECTIVE PRODUCTS IS THE SOLE AND EXCLUSIVE REMEDY PROVIDED TO THE CUSTOMER FOR BREACH OF THIS WARRANTY. TEKTRONIX AND ITS VENDORS WILL NOT BE LIABLE FOR ANY INDIRECT, SPECIAL, INCIDENTAL, OR CONSEQUENTIAL DAMAGES IRRESPECTIVE OF WHETHER TEKTRONIX OR THE VENDOR HAS ADVANCE NOTICE OF THE POSSIBILITY OF SUCH DAMAGES.

## STANDARDS COMPLIANCE

The VM700A complies with the following safety standards:

- Underwriters Laboratories: UL1244 – Second Edition–*Standard for Electrical and Electronic Measuring and Testing Equipment*
- Canadian Standards Association: C22.2 No. 231 Series-M89–*CSA Safety Requirements for Electrical and Electronic Measuring and Testing Equipment*
- American National Standard: ANSI/ISA-S82-1988–*Safety Standard for Electrical and Electronic Test, Measuring, Controlling and Related Equipment*
- International Standard: IEC 348–Second Edition–*Safety Requirements for Electronic Measuring Apparatus*

The VM700A complies with the following regulatory standards:

- U.S. EMI: FCC Rules, Part 15, Subpart J, Class A
- German EMI: VDE 0871.5 (Class B)–*Radio frequency Interference Suppression of Electrical Equipment and Systems*

## MANUFACTURER/IMPORTER CERTIFICATE

### Certificate of the Manufacturer/Importer

We hereby certify that the VM700A Video Measurement Set complies with the RF Interference Suppression requirements of Amtsbl.-Vfg 1046/1984.

The German Postal Service was notified that the equipment is being marketed.

The German Postal Service has the right to re-test the series and to verify that it complies.

TEKTRONIX

### Bescheinigung des Herstellers/Importeurs

Hiermit wird bescheinigt, daß der/die/das VM700A Video Measurement Set in Übereinstimmung mit den Bestimmungen der Amtsblatt-Verfügung 1046/1984 funkentstört ist.

Der Deutschen Bundespost wurde das Inverkehrbringen dieses Gerätes angezeigt und die Berechtigung zur Überprufüng der Serie auf Einhalten der Bestimmungen eingeräumt.

TEKTRONIX

### NOTICE to the User/Operator

The German Postal Service requires that Systems assembled by the operator/user of this instrument must also comply with Postal Regulation, Vfg. 1046/1984, Par. 2, Sect. 1.

### HINWEIS für den Benutzer/Betreiber:

Die vom Betreiber zusammengestellte Anlage, innerhalb derer dies Gerät eingesetzt wird, muß ebenfalls den Voraussetzungen nach Par. 2, Ziff. 1 der Vfg. 1046/1984 genugen.

### NOTICE to the User/Operator

The German Postal Service requires that this equipment, when used in a test setup, may only be operated if the requirements of Postal Regulation, Vfg. 1046/1984, Par. 2, Sect. 1.7.1 are complied with.

### HINWEIS für den Benutzer/Betreiber:

Dies Gerät darf in Meßaufbauten nur betrieben werden, wenn die Voraussetzungen des Par. 2, Ziff. 1.7.1 der Vfg. 1046/1984 eingehalten werden.

# PREFACE

This is a service manual for the VM700A video measurement set. The VM700A is a multi-function television test and measurement device that performs the functions of a waveform monitor, vector scope, automatic measurement set, and noise measurement set on acquired television signals. The user may select a display of numeric values to confirm the quality of the signal path, or may select graphic displays for more detailed analysis.

## CONTENTS OF THE MANUAL

This manual contains the following sections:

1. **Introduction** - Introduces the VM700A, describes its major features, and describes the contents of the manual.
2. **Controls and Connections** - Describes the VM700A front panel controls and rear panel connections.
3. **Maintenance and Replacement Procedures** - Customer service information and illustrated, step-by-step procedures for removing and replacing the field-replaceable assemblies of the VM700A.
4. **Verification and Adjustment**- Procedures for verifying the operation of the VM700A and adjustments to return the VM700A to specification after a board exchange.
5. **Theory of Operation** - Contains functional circuit descriptions of the VM700A's circuit boards to aid in understanding the instrument for servicing.
6. **Troubleshooting and Diagnostics** - Contains information to help you troubleshoot the VM700A and replace faulty circuit boards or other defective system components.
7. **Electrical Parts List** - The replaceable electrical parts are listed by assembly and circuit component number.
8. **Diagram and Circuit Board Illustrations** - Schematic diagrams and circuit board illustrations are supplied to assist in circuit repairs.
9. **Mechanical Parts List** - Exploded views and lists of the replaceable mechanical parts are provided to aid in locating a replacement part.

**Appendixes** - Contain information on internal jumper settings and instrument specifications.

Digitized by the Internet Archive
in 2025

https://archive.org/details/manualsplus_05315

# TABLE OF CONTENTS


Compliances ..... i
Preface ..... iii
Table of Contents ..... v
List of Figures ..... xiv
List of Tables ..... xv
Safety Summary ..... xvii

**Section 1 Introduction**
Automatic Video Measurements ..... 1-1
Digital Waveform/Vectorscope ..... 1-1
Graphic Displays of Measurements ..... 1-1
Picture Mode ..... 1-1
User-Programmable Functions ..... 1-1
Hardcopy ..... 1-2
Remote Operation ..... 1-2
White Phosphor CRT (Option 74) ..... 1-2

**Section 2 Controls and Connections**
Front Panel Controls ..... 2-1
- Touch Screen ..... 2-1
- Keypad ..... 2-1
  - Manual and Auto Operational Modes ..... 2-1
  - Freeze, Source Selection, and Average Functions ..... 2-2
  - Support Functions ..... 2-2
- Control Knob ..... 2-3
  - Display and Graticule Intensity Control ..... 2-3
  - Select Line ..... 2-3

Rear Panel and Connections ..... 2-3
Equipment/Signal Sources Required ..... 2-5

**Section 3 Maintenance and Replacement Procedures**
Introduction ..... 3-1
Preventive Maintenance ..... 3-1
- Tools Required ..... 3-1
- Cleaning ..... 3-1
  - The Touch Screen and the Front Bezel Air Filters ..... 3-2
- Visual Inspection ..... 3-2

Static-Sensitive Components ..... 3-2
Troubleshooting ..... 3-3
- Troubleshooting Aids ..... 3-4
  - Foldout Pages ..... 3-4
  - Parts Lists ..... 3-4
- Major Assembly Interconnection ..... 3-5
- General Troubleshooting Techniques ..... 3-5

Obtaining Replacement Parts . . . . . 3-6
Customer Services . . . . . 3-
Exchanging VM700A Modules . . . . . 3-6
Customer Service Outside the U.S. . . . . 3-8
Removing and replacing Instrument Cover Panels . . . . . 3-9
Tools Required . . . . . 3-9
Removing and Replacing a Cover Panel . . . . . 3-9
Locating the Major VM700A Components . . . . . 3-10
Removing and Replacing the CPU and EPROM/NVRAM Boards . . . . . 3-10
Tools Required . . . . . 3-10
Removing the Board . . . . . 3-10
Replacing the Board . . . . . 3-11
Removing and Replacing the Controller, Data Acquisition, and Display Memory boards . . . . . 3-12
Tools Required . . . . . 3-12
Gaining Access to the Right Side Cardcage . . . . . 3-12
Removing the Controller Board (A8) . . . . . 3-13
Replacing the Controller Board . . . . . 3-13
Removing the Data Acquisition Board (A7) . . . . . 3-14
Replacing the Data Acquisition Board . . . . . 3-14
Removing the Display Memory Board (A9) . . . . . 3-14
Replacing the Display Memory Board . . . . . 3-14
Replacing the Cardcage Retainer and Instrument Cover . . . . . 3-14
Removing and Replacing the Analog-Section Boards . . . . . 3-15
Tools Required . . . . . 3-
Removing and Replacing the Filter Switch Board (A4) . . . . . 3-15
Removing the Filter Switch Board . . . . . 3-15
Replacing the Filter Switch Board . . . . . 3-16
Removing and Replacing the Analog Input Board (A1) . . . . . 3-16
Removing the Analog Input Board . . . . . 3-16
Replacing the Analog Input Board . . . . . 3-17
Removing and Replacing the ADC Board (A3) . . . . . 3-17
Removing the ADC Board . . . . . 3-17
Replacing the ADC Board . . . . . 3-18
Removing and Replacing the Genlock Board (A2) . . . . . 3-19
Removing the Genlock Board . . . . . 3-19
Replacing the Genlock Board . . . . . 3-19
Removing and Replacing Plug-In Filter Modules . . . . . 3-19
Removing and Replacing Plug-In Filters on the Filter Switch Board . . . . . 3-20
Removing and Replacing Plug-In Filters on the ADC Board . . . . . 3-22
Removing and Replacing Display and Control Components . . . . . 3-23
Tools Required . . . . . 3-23
Removing and Replacing the CRT Bezel . . . . . 3-23
Removing and Replacing the ON/STDBY Switch . . . . . 3-24
Removing and Replacing the Keypad Board Assembly . . . . . 3-24
Removing and Replacing the CRT Touch Screen . . . . . 3-25
Removing and Replacing the CRT Assembly . . . . . 3-

Removing and Replacing Power, Interconnect, and Cooling components . . . . . 3-27
Tools Required . . . . . 3-27
Removing and Replacing the Power Supply . . . . . 3-28
Removing and Replacing the Main Interconnect Assembly . . . . . 3-29
Removing and Replacing the Cooling Fan . . . . . 3-30
VM700A Rack Mounting Instructions . . . . . 3-30
Unpackaging . . . . . 3-32
Power Requirements . . . . . 3-32
Changing the line voltage range and fuse . . . . . 3-32
Rack Mounting . . . . . 3-32
Mounting the Rack Slides . . . . . 3-33
Installation/Removal from the Rack . . . . . 3-35
Rack Adjustments . . . . . 3-35
Rack Slide Adjustments . . . . . 3-35
Rack Slide Maintenance . . . . . 3-35

**Section 4 Verification and Adjustment**

Introduction . . . . . 4-1
Power-Up Diagnostics . . . . . 4-1
Test Equipment Required . . . . . 4-1
System Verification Procedures . . . . . 4-3
Procedure 1: Measure Squarewave . . . . . 4-3
Procedure 2: Measure Sinewave . . . . . 4-4
Procedure 3: Measuring the Burst Frequency . . . . . 4-6
System Adjustment Procedures . . . . . 4-7
Procedure 1: Adjusting the Genlock Voltage-Controlled Oscillator (VCO) . . . . . 4-7
Procedure 2: Adjusting Filter Flatness . . . . . 4-10
Procedure 3: Adjusting the ADC Gain . . . . . 4-12
Procedure 4: Adjusting the Calibration DAC (CalDAC) . . . . . 4-12
Procedure 5: Adjusting the Display . . . . . 4-13
Extended Adjustment Procedure . . . . . 4-15
Procedure 1: Adjusting the Frequency Response . . . . . 4-15

**Section 5 Theory of Operation**

Introduction . . . . . 5-1
Overview of The VM700A System . . . . . 5-1
Analog Input Board (A1) . . . . . 5-1
Loop-Through Inputs and Input Buffers . . . . . 5-3
Mode Control . . . . . 5-3
Clamped Amplifiers . . . . . 5-3
Clamp and Bias Generator . . . . . 5-3
Channel Selection . . . . . 5-3
Differential Amplifier . . . . . 5-3
Dynamic Offset Generator and Offset Amplifier . . . . . 5-3
Variable Gain Amplifier . . . . . 5-3
Dither Generator and Dither Amplifier . . . . . 5-4

Static RAM ..... 5-29
16-Bit Counter ..... 5-
Address Latch ..... 5-29
Control Word Latch ..... 5-29
Dynamic Settings ..... 5-29
Dither Generator ..... 5-30
Address and Data Buffers ..... 5-30
Static RAM ..... 5-30
Output Latches and Analog Input Board Interface ..... 5-30
Display Memory Board (A9) ..... 5-31
Address Decoding ..... 5-31
Bus Buffers ..... 5-31
Video Display Generator ..... 5-31
Video Control Register ..... 5-31
Video Address Counter ..... 5-31
Video RAM Address Generator ..... 5-31
Video RAM Selector ..... 5-31
Video RAM ..... 5-31
Pixel Clock, Horizontal and Vertical Sync Generators ..... 5-33
Pixel Multiplexer ..... 5-33
Brightness Control DAC ..... 5-33
Video Output ..... 5-33
Centering Control ..... 5-33
Interrupt Generator ..... 5-
Dynamic RAM Controller ..... 5-33
20 MHz Clock ..... 5-33
Timing/Arbitration Logic ..... 5-34
Decoders/Drivers ..... 5-34
DSACK Generator ..... 5-34
System RAM ..... 5-34
Front Panel Controller ..... 5-34
68020 Interface ..... 5-34
68008 Microprocessor ..... 5-35
1 kHz Interrupt Clock ..... 5-35
Interrupt Controller/Address Decoder ..... 5-35
64K EPROM/8K RAM ..... 5-35
Buffers ..... 5-35
Integrate Timer ..... 5-35
Front Panel Board (A10A1) ..... 5-35
Address Decoder ..... 5-36
Status Port ..... 5-36
Configuration Register ..... 5-36
Control Knob Encoder ..... 5-36
Driver ..... 5-37
Synchronous Demodulator ..... 5-37
Integrator ..... 5
Overflow Detector ..... 5-37

A/D Converter ... 5-37
Multiplexer ... 5-37
Auto-Null Circuit ... 5-38
Touch-Screen Fundamentals ... 5-38
Keypad board (A10A2) ... 5-38
Control Knob ... 5-39
Pushbuttons ... 5-39
LEDs ... 5-39
Data Acquisition/CONTROLLER Board (A18) ... 5-40
Acquisition Introduction ... 5-40
Video Data and Clock Inputs ... 5-40
FIFO/Demultiplexor ... 5-40
Acquisition Control ... 5-42
Acquisition Clock ... 5-42
The Data Bus Interface ... 5-42
Data Acquisition Memory (Static RAM) ... 5-43
Min-Max ASIC ... 5-43
Controller Introduction ... 5-43
Bus Buffers ... 5-43
Controller ASIC ... 5-43
Address Decoding ... 5-43
Output Latches and Analog Input Board Interface ... 5-45
Clamp Counters ... 5-45
Status Counter ... 5-45
ECL-To-TTL Conversion ... 5-45
Data and Address Latches onto the BCD0-12 Bus ... 5-45
Trigger RAM ... 5-45
Sequencer (State Machine) ... 5-46
Sequencer Address and Data Buffers (U27, U8, and U22 – 25) ... 5-46
Address Register ... 5-46
Static RAM ... 5-46
16-Bit Counter ... 5-46
Dynamic Address Latch ... 5-46
Control Word Latch ... 5-46
Dynamic Settings ... 5-47
Dither Generator ... 5-47
Address and Data Buffers ... 5-47
Dynamic Static RAM ... 5-48
Output Latches and Analog Input Board Interface ... 5-48
Power Supply (A15) ... 5-49
Block Circuit Description ... 5-49
Input Power Rectifier ... 5-49
Housekeeping Power Supply ... 5-49
Figure 5-16. Simplified block diagram of the power supply ... 5-50
Inverter Switching Circuit ... 5-51
+12 V and 15 V Regulators ... 5-51
Alarm Sensing ... 5-51

Alarm Logic ..... 5-51
Fan Drive ..... 5-
Detailed Circuit Description ..... 5-52
Input Power Rectifier ..... 5-52
115V/230V Switching (S2) ..... 5-52
Pulse-Width Modulator and Control Circuits ..... 5-52
Power Switch Driver ..... 5-53
Inverter Switching Circuit ..... 5-53
Preregulator ..... 5-53
Current Sensing ..... 5-54
Inverter ..... 5-54
Secondary Rectifiers and Filtering ..... 5-54
+12 V and 15 V Regulators ..... 5-54
+12 V Regulator ..... 5-54
+ and –15 V Regulators ..... 5-55
Overcurrent Sensing ..... 5-55
Alarm Sensing ..... 5-55
LED Indicators ..... 5-55
Power Supply Supervisor ..... 5-55
Power Reset Comparator ..... 5-55
Overcurrent Comparators ..... 5-56
Fan Drive ..... 5-57
Alarm Logic ..... 5-58
Over Temperature Comparators ..... 5-
Shutdown Logic ..... 5-59
Overvoltage Indicator ..... 5-59
Overcurrent Comparator ..... 5-59
Introduction ..... 5-62
VM700A to GPIB Interface (diagram 1A19) ..... 5-63
Main Processor Address Buffers (U103, U104, U105, U106) ..... 5-63
IA Bus Buffers (U107, U108, U109) ..... 5-63
Block Select Switch (S100) and Identity Comparator (U100) ..... 5-63
VM Decoders (U110, U111) ..... 5-63
Window (U0505) ..... 5-64
DSACKCTL PAL (U115) ..... 5-64
VM Buffer Control (U126) ..... 5-64
Data Bus Buffer/Registers (U122, U123, U124, U125) ..... 5-65
Dual-Port Memory Controller and Interface (diagram 2A19) ..... 5-65
Dual-Port Read Address Selector (U131, U132, U133, U135) ..... 5-65
DRAMMAP (U601) ..... 5-65
Data Selector (U134) ..... 5-65
Mapped Addressing (U130) ..... 5-65
Decoder Latch (U602) ..... 5-65
DRAMCNTL (U138) ..... 5-66
DPAssist / PLCC (U507) ..... 5-66
Dual-Port Memory and Interprocessor Communication Register (diagram 3A19) ..... 5-
DRAM U142, U143, U144, U149, U145, U146, U147, U148) ..... 5-66

IPCOM Register U504 ..... 5-66
GPIB Processor and Dual-Port Memory Interface (diagram 4A19) ..... 5-67
GPIB Processor (U162) ..... 5-67
20 MHz Clock (Y502) ..... 5-67
Interrupt Control (U605) ..... 5-67
Forced Instruction Mode ..... 5-67
GPIB Buffer Control (U158) ..... 5-68
Decoding, Timing, Watchdog Timer, Reset & Halt Generation, and Control Register (diagram 5A19) 5-68
Decoding (U608, U607) ..... 5-68
Acknowledge and Watchdog Timer (U606) ..... 5-68
Watchdog Timer ..... 5-70
Acknowledge ..... 5-70
Control Register (U609) ..... 5-70
Reset/Request (U610) ..... 5-71
Reset ..... 5-71
Request ..... 5-71
GPIB Interface, System Clock, Debug RS-232, and Forced Instruction Buffers (diagram 6A19) ..... 5-71
GPIB Controller (U200, U203, U166A) ..... 5-72
DUART and RS-232 Debug (U611) ..... 5-72
Forced Instruction Buffers (U612, U613) ..... 5-72
GPIB Bus Interface and Filters (U199, U201, FL101 and FL102) ..... 5-72
GPIB Status LEDS (U207 and DS103 - DS107) ..... 5-72

**Section 6 Troubleshooting and Diagnostics**

Isolating Operational Faults ..... 6-1
Diagnostics ..... 6-6
Power-Up Diagnostics ..... 6-6
Bypassing the Power-Up Diagnostics ..... 6-7
Power Up Diagnostic Errors ..... 6-7
User-Selectable Diagnostics ..... 6-7
Diagnostics Selection File ..... 6-11
Running User-Selectable Diagnostics on Power-Up ..... 6-11
Bypassing User-Selectable Diagnostics on Power-Up ..... 6-12
Running Individual Diagnostics ..... 6-12
Running User-Selectable Diagnostics Continuously (DiagsLoop) ..... 6-13
The Diagnostic Errors File ..... 6-13
Auto Reset (Running All Diagnostics) ..... 6-13
Forcing Auto Reset ..... 6-13
Viewing Diagnostics Remotely via the RS-232C Serial Port ..... 6-14
Connecting a Terminal or PC ..... 6-14
Serial Port Signal Description ..... 6-15
Entering Debug Mode ..... 6-16
Running Diagnostics in Debug Mode ..... 6-17
Serial Port Setup for Low Level Diagnostics, Debug Mode ..... 6-18
Viewing Stored Diagnostic Information ..... 6-18
The Console File ..... 6-19
Troubleshooting the CPU Board ..... 6-19
Troubleshooting the Power Supply ..... 6-19

Isolating a Power Supply Fault . . . . . 6-20
Interpreting the Red Fault LEDs on the Power Supply . . . . . 6-
Troubleshooting the CRT Display . . . . . 6-21
Isolating a CRT Display Fault . . . . . 6-21

**Appendix A Default Jumper and Switch Settings**

**Appendix B Specifications**
Physical Characteristics . . . . . B-1
Power Requirements . . . . . B-1
Environmental . . . . . B-1
Measurement Specifications . . . . . B-1
Measure Mode . . . . . B-1
Bar Line Time . . . . . B-1
Bounce . . . . . B-2
Burst Frequency . . . . . B-2
Chrominance to Luminance . . . . . B-2
Chrominance Noise . . . . . B-2
Chrominance Non–Linearity . . . . . B-2
Color Bar . . . . . B-3
Differential Gain and Phase . . . . . B-3
Frequency Response and Group Delay . . . . . B-3
Horizontal Blanking . . . . . B-3
Horizontal Timing . . . . . B-
Incidental Carrier Phase Modulation . . . . . B-
Jitter . . . . . B-4
K–Factor . . . . . B-4
Line Frequency . . . . . B-4
Luminance Non–Linearity . . . . . B-5
Multiburst . . . . . B-5
Noise Spectrum . . . . . B-5
SCH Phase . . . . . B-5
Vertical Blanking . . . . . B-5
Auto Mode . . . . . B-6
Line Blanking Timing Measurements . . . . . B-6
Field Blanking Timing Measurements . . . . . B-6
Other Timing Measurements . . . . . B-6
Amplitude and Phase Measurements . . . . . B-7
Frequency Response Measurements . . . . . B-8
Waveform Distortion Measurements . . . . . B-8
Low Frequency Error . . . . . B-8
Noise Measurements . . . . . B-9
Incidental Carrier Phase Modulation (ICPM) . . . . . B-9
NTSC Measurement Specifications . . . . . B-10
Bar Line Time . . . . . B-10
Bounce . . . . . B-1
Burst Frequency . . . . . B-
Chrominance–to–Luminance Gain and Delay . . . . . B-10

Chrominance Frequency Response . . . . . B-11
Chrominance Noise . . . . . B-11
Chrominance Non–Linearity . . . . . B-11
Color Bar . . . . . B-11
SMPTE Color Bar Nominal Values . . . . . B-11
Differential Gain and Phase . . . . . B-12
Frequency Response and Group Delay . . . . . B-12
Horizontal Blanking . . . . . B-12
Horizontal Timing . . . . . B-12
Incedental Carrier Phase Modulation . . . . . B-13
Jitter . . . . . B-13
K–Factor . . . . . B-13
Line Frequency . . . . . B-13
Luminance Non–Linearity . . . . . B-13
Multiburst . . . . . B-14
Noise Spectrum . . . . . B-14
SCH Phase . . . . . B-14
Vertical Blanking . . . . . B-14
Auto Mode Measurements . . . . . B-15
RS–170A Horizontal Blanking Interval Timing Measurements . . . . . B-15
RS–170A Vertical Blanking Interval . . . . . B-15
FCC Horizontal Blanking Interval Timing Measurements . . . . . B-15
FCC Vertical Blanking Interval Timing Measurements . . . . . B-16
Amplitude and Phase Measurements . . . . . B-16
Frequency Response Measurements . . . . . B-17
Incidental Carrier Phase Modulation . . . . . B-17
Color Bar Measurements . . . . . B-17
Out–of–Service Measurements . . . . . B-17
Waveform Distortion Measurements . . . . . B-18
VIRS Measurements . . . . . B-18
Signal–to–Noise Ratio Measurements . . . . . B-19

**Section 7 Electrical Replaceable Parts List**

**Section 8 Diagrams and Circuit Board Illustrations**

**Section 9 Mechanical Replaceable Parts List**

**Change Page**

## LIST OF FIGURES


2-1. The VM700A Front Panel ..... 2-1
2-2. VM700A Rear Panel ..... 2-4

3-1. Removing a cover panel ..... 3-9
3-2. Major components of the VM700A ..... 3-10
3-3. Removing the cardcage center support ..... 3-11
3-4. Installing a board in the cardcage ..... 3-12
3-5. Loosening the screws on the right cardcage retainer ..... 3-13
3-6. Disconnecting the power bus cable ..... 3-15
3-7. Removing the attachment screws from the analog input board's signal input connector plate ..... 3-17
3-8. Disconnecting the shielded cable at J765 ..... 3-18
3-9. Plug in filter modules on early filter switch boards ..... 3-20
3-10. Plug in filter modules on later filter switch boards ..... 3-21
3-11. Filter modules on the ADC board ..... 3-22
3-12. Locating the bezel retaining screws ..... 3-23
3-13. Removing the retaining screws from the keypad board ..... 3-24
3-14. Orienting connector J933 for installation on the keypad board ..... 3-25
3-15. Removing the CRT assembly retaining screws ..... 3-27
3-16. Removing the power supply retaining screws ..... 3-29
3-17. Removing the retaining screws for the main interconnect board assembly from inside the left cardcage ..... 3-3
3-18. Construction of rack slides ..... 3-33
3-19. Rail Detail for mounting rack slides ..... 3-34
3-20. Mounting stationary rack sections ..... 3-34
3-21. Installing and removing the VM700A from the rack ..... 3-35

4-1. Adjustment locations ..... 4-9
4-2. Display monitor centering adjustments ..... 4-14
4-3. Example gain-phase analyzer flatness waveforms for the VM700A ..... 4-17

5-1. Analog input board (A1) block diagram ..... 5-2
5-2. Genlock board (A2) block diagram ..... 5-6
5-3. ADC board (A3) block diagram ..... 5-11
5-4. Filter switch board (A4) block diagram ..... 5-14
5-5. CPU board block diagram ..... 5-16
5-6. EPROM/NVRAM board block diagram ..... 5-20
5-7. Data acquisition board block diagram ..... 5-22
5-8. Controller board block diagram ..... 5-26
5-9. Dither generator's 64-step dither waveform ..... 5-30
5-10. Display memory board block diagram ..... 5-32
5-11. Front panel board block diagram ..... 5-36
5-12. Keypad board (A10A2) block diagram ..... 5-39
5-13. Aquisition circuitry block diagram ..... 5-4
5-14. Controller section block diagram ..... 5-4
5-15. Dither generator's 64-step dither waveform ..... 5-47

5-16. Simplified block diagram of the power supply . . . . . 5-50
5-17. PWR FAIL and PWR RESET timing . . . . . 5-56
5-18. Fan drive voltage versus temperature . . . . . 5-58
5-19. Simplified block diagram of the VM700A . . . . . 5-58
5-20. GPIB board location in the VM700A . . . . . 5-62
5-21. GPIB board address space allocation as seeen by the GPIB processor . . . . . 5-69
5-22. GPIB board address space allocation as seeen by the VM700A processor . . . . . 5-70
5-23. GPIB rear panel arrangement . . . . . 5-73

6-1. DIP Switch Settings on Early and Late EPROM/NVRAM Boards . . . . . 6-4
6-2. Power Up Diagnostics Selection Display . . . . . 6-11
6-3. VM700A Rear Panel . . . . . 6-14
6-4. Debug Mode Display Viewed from a Terminal or PC . . . . . 6-17

## LIST OF TABLES

3-1. Static Susceptability . . . . . 3-3
3-2. Sold or Exchanged VM700A Modules . . . . . 3-7

4-1. Test Equipment Required for Verification and Adjustment . . . . . 4-2

5-1. CPU switch functions . . . . . 5-16

6-1. VM700A Symptoms and Corrective Actions . . . . . 6-2
6-2. VM700A Power-Up Diagnostics . . . . . 6-7
6-3. User-Selectable Diagnostics . . . . . 6-8
6-4. Typical RS-232C Cable Wiring . . . . . 6-15
6-5. A5 CPU Board Jumper Settings . . . . . 6-18

A-1. VM700A Factory Default Jumper and Switch Settings . . . . . A-1

# OPERATORS SAFETY SUMMARY

*The general safety information in this part of the summary is for both operating and servicing personnel. Specific warnings and cautions will be found throughout the manual where they apply, but may not appear in this summary.*

## TERMS

### In This Manual

**CAUTION** statements identify conditions or practices that could result in damage to the equipment or other property.

**WARNING** statements identify conditions or practices that could result in personal injury or loss of life.

### As Marked on Equipment

**CAUTION** indicates a personal injury hazard not immediately accessible as one reads the marking, or a hazard to property, including the equipment itself. Refer to the manual for information.

**DANGER** indicates a personal injury hazard immediately accessible as one reads the marking.

Protective ground (earth) terminal.

## SAFETY INFORMATION

**Use the Proper Power Source**. This product is intended to operate from a power source that will not apply more than 250 V rms between the supply conductors or between either supply conductor and ground. A protective-ground connection by way of the grounding conductor in the power cord is essential for safe operation.

**Ground the Product**. This product is grounded through the grounding conductor of the power module power cord. To avoid electrical shock, plug the power cord into a properly wired receptacle before connecting to the product input or output terminals. A protective-ground connection by way of the grounding conductor in the power module power cord is essential for safe operation.

**Danger May Arise From Loss of Ground**. Upon loss of the protective-ground connection, all accessible conductive parts (including knobs and controls that may appear to be insulating) can render an electric shock.

**Use the Proper Fuse**. To avoid fire hazard, use only the fuse of correct type, voltage rating, and current rating as specified in the parts list for your product. Refer fuse replacement to qualified service personnel.

**Do Not Operate in Explosive Atmospheres**. To avoid explosion, do not operate this product in an explosive atmosphere.

**Do Not Remove Covers.** To avoid personal injury, do not remove the product covers or panels. Do not operate the product without the covers and panels properly installed.

# SERVICING SAFETY SUMMARY

*For Qualified Service Personnel only. Refer also to the preceding Operators Safety Summary.*

**Do Not Service Alone.** Do not perform internal service or adjustment of this product unless another person capable of rendering first aid and resuscitation is present.

**Use Care When Servicing With Power On.** Dangerous voltages exist at several points in this product. To avoid personal injury, do not touch exposed connections or components while power is on. Disconnect power before removing protective panels, soldering, or replacing components.

**Use the Proper Power Source.** This product is intended to operate from a power source that will not apply more than 250 V rms between the supply conductors or between either supply conductor and ground. A protective-ground connection by way of the grounding conductor in the power cord is essential for safe operation.

# Section 1
# INTRODUCTION

The VM700A Video Measurement Set is a multi-function television test and measurement device with an easy to use interface. The VM700A performs the functions of a waveform monitor, vectorscope, automatic measurement set, and a noise measurement set on acquired television signals. Signals can be broadcast or from test equipment. The user may select numeric value displays to confirm signal path quality, or graphic displays for more detailed analysis.

The VM700A can be operated directly using the front panel or remotely using one of the RS-232C ports on the rear panel.

## AUTOMATIC VIDEO MEASUREMENTS

The VM700A's Auto mode makes standardized video measurements automatically, including those specified in the RS-250B/EIA-250C, NTC-7, and RS-170A video signal standards. These measurements can be compared with user-selectable limits. The VM700A generates a caution or alarm message when a measurement falls outside the selected limits. Reports can be formatted and printed at user-scheduled times.

## DIGITAL WAVEFORM/VECTORSCOPE

For detailed waveform analysis, you may display the actual signal and take additional measurements manually. In Waveform mode, cursors are available to aid in measuring time, frequency, and amplitude. These cursors allow precise location of 10, 50, and 90 percent points on any transition.

You may expand the waveform display around any vertical or horizontal point. Since the data is digitized, the display remains bright at all expansion factors. The axes automatically expand with the waveform, so all units are correct as displayed.

The Vector mode provides the normal vectorscope display. The vectors may be rotated or expanded, with the rotation angle and gain values displayed numerically on the screen.

A unique "Find Colorbars" feature searches all video for colorbars and displays the vectors it finds. Select Line in both Waveform and Vector modes can be used to quickly specify any line for display or automatic measurement if the proper signal type is being measured.

## GRAPHIC DISPLAYS OF MEASUREMENTS

Measure mode provides graphic displays of measurements such as noise spectrum, group delay, and K-factor, for adjustment or closer analysis of the measurement. Most measurements can be made relative to a stored reference to minimize or eliminate signal source errors. Most measurements have averaging to reduce the effects of random noise.

## PICTURE MODE

You may quickly verify the signal source using the picture mode display and select any line on the picture for viewing in the waveform or vector displays.

## USER-PROGRAMMABLE FUNCTIONS

You can define a sequence of operations as a new function. For example, the measurements to be made on a transmitter demodulator video output could be identified with a function labeled DEMOD. A user would select this function to make all measurements and provide a printout.

## HARDCOPY

All information on screen may be printed on printer supporting PostScript[1] or 24-pin Epson[2] graphics via the standard RS-232C interface. Automatic measurement results can be printed on most ASCII printers using the same interface.

## REMOTE OPERATION

The VM700A can be operated from a remote terminal via its RS-232C ports to monitor unattended transmission systems, or to put systems under computer control.

## WHITE PHOSPHOR CRT (OPTION 74)

This option proivides a display module with a white phosphor CRT instead of the standard green phoshor when a new insrument is ordered with Option 74 from the factory. All the display module adjustments are the same as those for the standard CRT.

---

1 PostScript is a registered trademark of Adobe Systems, Inc.

2 Epson is a registered trademark of Epson Corp.

# Section 2
# CONTROLS AND CONNECTIONS

This section describes the VM700A front panel controls and rear panel connections. The VM700A can be operated directly using the front panel or remotely using one of the RS-232C ports on the rear panel.

## FRONT PANEL CONTROLS

The front panel (shown in Figure 2-1) consists of a touch screen and a 20-button keypad with a control knob.

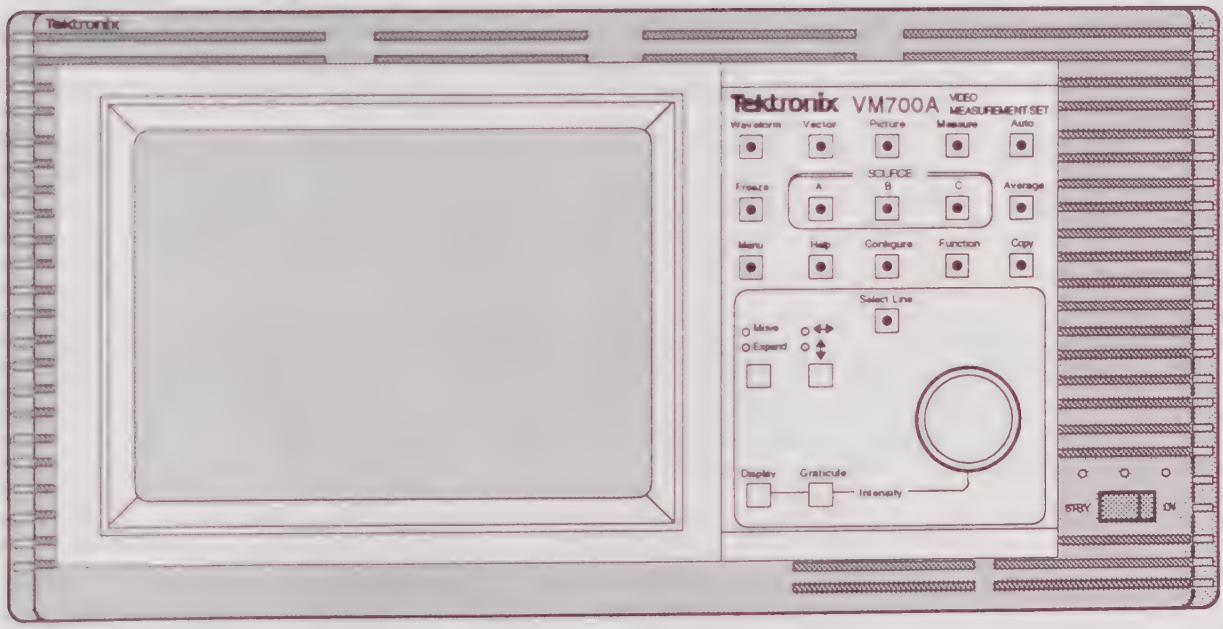


**Figure 2-1. The VM700A front panel.**

### Touch Screen

The display (CRT) area of the VM700A features a touch screen for input. The touch screen displays input waveform signals, the digital vectorscope, a low-quality television picture of the input signal, graphic measurement displays, and automatic measurement results. Most of these modes include the line number of the video line being displayed. Many operations are performed by touching softkeys (shown as labeled rectangles) at the bottom of the touch screen. Other areas of the screen may display currently selected measurement parameters. When applicable, selection values are changed by rotating the large control knob.

### Keypad

The keypad contains three five-button rows, plus an additional five buttons associated with the control knob.

#### Manual and Auto Operational Modes

The top row of buttons controls the operational modes (i.e., the major functions). The VM700A has five operational modes: four manual modes and Auto mode. The VM700A operates in one of these

modes whenever it is powered on. The manual modes are Waveform, Vector, Picture, and Measure. The power-on default mode is Waveform.

The manual modes perform the specified operation and provide a graphic display with digital readouts and status information. Auto mode makes measurements automatically and provides a tabular listing of the measurement results. Reporting of measurement results can be performed in either mode. Parameters such as clamping, sync source, and the displayed line (system line) are common for all the manual modes of operation. However, *manual mode parameters do not carry over to Auto mode.* Parameters for both Auto mode and the manual modes are set through the directory and file structure accessed through the Configure button.

### Freeze, Source Selection, and Average Functions

The second row in the keypad contains the Freeze button, the input channel selection buttons (grouped as SOURCE A, B, and C), and the Average button.

| | |
|---|---|
| Freeze | When you select Freeze, acquisition of the signal is halted. The display can be moved, expanded or contracted, as described below under Control Knob, but the display is not updated. |
| Source Selection | For all operational modes, one of the input sources is always selected. For some of the manual modes, an input source can be inverted. In Waveform and Vector modes, an inverted source can be the sole input or it can be added to another input. In Measure mode, an inverted source can only be added to another source.<br><br>To invert a single source, press and hold the source button approximately one second, until the instrument beeps. When a source is inverted, the LED on the source button flashes. To invert a second source and add it to another, press and hold the normal source and while holding it, quickly press and release the inverted source. The LED on the inverted source will flash. |
| Average | The Average button enables uncorrelated or random noise reduction on the signal in Waveform and Vector modes and averaging of the signal in Measure mode. The amount of noise reduction (up to 30.10 dB) is set with the Noise softkeys. The number of averages (up to 256) is set with the Average Num softkeys. |

### Support Functions

The third row in the keypad contains support functions: Menu, Help, Configure, Function, and Copy. All of these functions except Copy are toggled on and off, either by pressing the button twice (i.e., turned on by pressing once, and off by pressing again), or by selecting a different operational mode in the top row.

| | |
|---|---|
| Menu | The Menu button displays a menu of softkeys across the bottom of the touch screen. In some cases, touching a softkey displays a further submenu of softkeys. |
| Help | Pressing the Help button activates the Help function. When Help is activated, pressing a button or selecting a softkey displays a brief explanation of that button's softkey and function. When the Help function is active, all buttons and softkeys except Help lose their normal function and the LED on the Help button flashes. Pressing the Help button a second time turns off the Help function. |
| Configure and Function | The Configure and Function buttons and their uses are described in the user documentation. |

Copy

The Copy button sends a copy of the display (in user-selectable 24-pin Epson or PostScript format) to the VM700A's print spooler to queue for printing. The LED in the Copy button flashes as long as the copy remains in the spooler. To delete the copy from the spooler, press the Configure button while the Copy LED is flashing and select the Cancel Copy softkey. This softkey only appears when a copy is pending in the spooler. To print the spooled copy, a suitable printer must be attached to one of the VM700A's serial ports.

## Control Knob

The action of the control knob depends on its assignment for the current mode of operation. For example, in Waveform mode, rotating the control knob affects horizontal or vertical movement of the display or horizontal or vertical expansion of the display, depending on the selections of the Move/Expand button and the "left/right/up/down" button. In Auto mode, rotating the control knob scrolls through the list of measurements. When a user-configurable parameter is selected for changing, the control knob is rotated to make the change. The specific functions of the control knob in each mode are described in the relevant sections of the user documentation.

### Display and Graticule Intensity Control

To change the intensity of either the display or the graticule, hold down the appropriate button (Display or Graticule), and rotate the control knob.

### Select Line

The Select Line button changes the function of the control knob from the default Move/Expand action to line selection. The LED in the Select Line button is on when Select Line is active. To scroll through the field line by line, press the Select Line button and rotate the control knob. Depending on the operational mode, a menu of softkeys may also appear. The Select Line softkeys and the specific control knob functions are described in the relevant sections of the user documentation.

# REAR PANEL AND CONNECTIONS

The rear panel (shown in Figure 2-2) includes the line voltage and switching module, line voltage selector, fuse holder, a cooling fan, the signal input connectors, and the data ports.

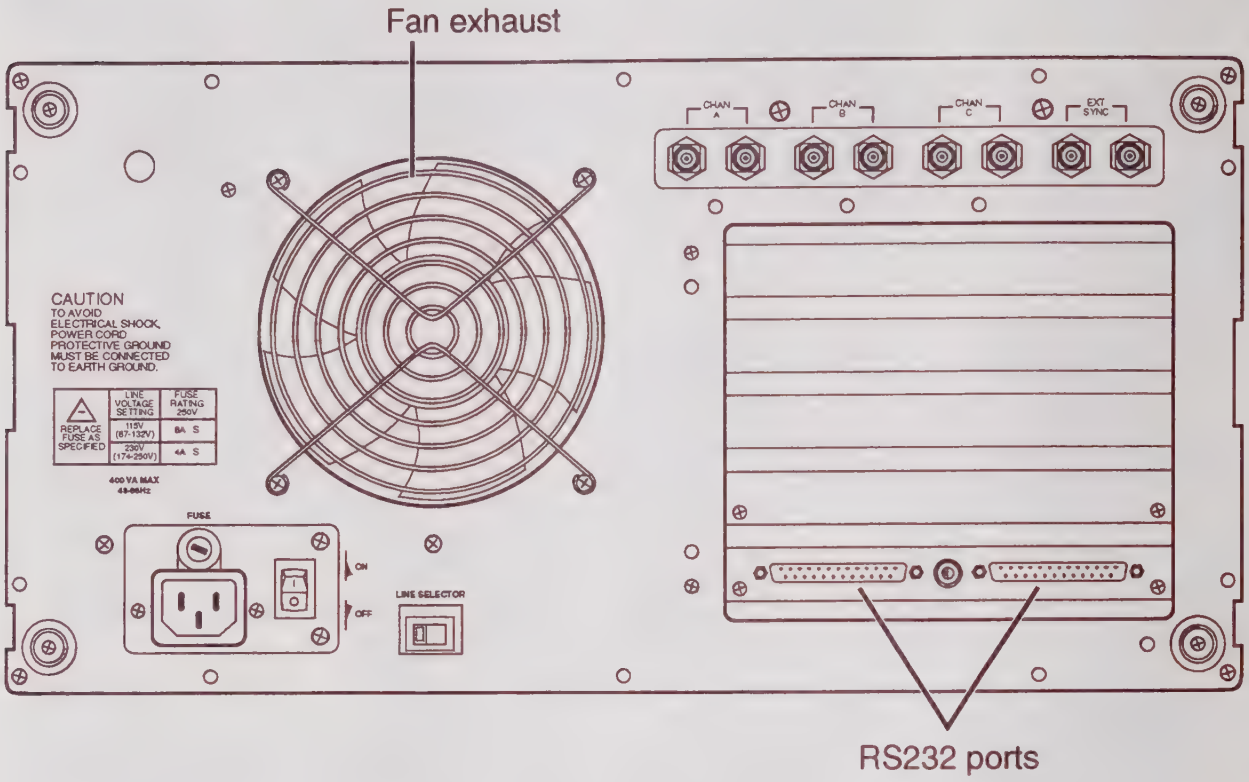


**Figure 2-2. VM700A Rear Panel.**

The following paragraphs briefly describe each of the rear panel features.

| | |
|---|---|
| Line voltage and switching module | Includes the connector and filter for line input voltage, the line fuse, and the main power switch. |
| Line voltage selector | Selects either 115 or 230 VAC line input voltage. |

**CAUTION**

*If you intend to operate the VM700A from a line voltage other than the voltage configured at the factory, you must replace the installed fuse with a fuse of the correct rating. See the label on the VM700A rear panel for fuse rating information. Operating the VM700A with the wrong fuse can result in severe damage.*

| | |
|---|---|
| Exhaust fan | Circulates air to internal components. |
| Signal inputs[1] | Connections for Channel A, B, and C signal inputs to the VM 700A. |
| External sync | Allows connecting the VM700A to an external sync source. |

[1] The signal inputs and the external sync connector are loop-through connections that must be terminated in 75Ω when they are not used.

| | |
|---|---|
| RS-232 ports | Connect the VM700A to a printer for printing displayed data, screens, and logging information. The RS 232 ports also enable the VM700A to be accessed remotely via a terminal or a PC. VM700A remote access configuration and commands are discussed in the user documentation. |

## EQUIPMENT/SIGNAL SOURCES REQUIRED

Most measurements supported by the VM700A are performed on the television signal. The signals may be either off-the-air broadcast or looped-through programming signals. For testing the VM700A, the signal source may be provided by an appropriate test signal generator. In most cases, the VM700A needs a video signal in a specific format (NTSC or PAL) to perform a meaningful measurement.

The VM700A's sampling clock may also be driven from an external sync source. In Waveform mode, any signal can be displayed as long as it can be phase locked to the external sync source.

## WARNING

THE FOLLOWING SERVICING INSTRUCTIONS ARE FOR USE BY QUALIFIED PERSONNEL ONLY. TO AVOID PERSONAL INJURY, DO NOT PERFORM ANY SERVICING OTHER THAN THAT CONTAINED IN OPERATING INSTRUCTIONS UNLESS YOU ARE QUALIFIED TO DO SO. REFER TO OPERATORS SAFETY SUMMARY AND SERVICE SAFETY SUMMARY PRIOR TO PERFORMING ANY SERVICE.

# Section 3
# MAINTENANCE AND REPLACEMENT PROCEDURES

## INTRODUCTION

This section contains general procedures for the care and maintenance of the VM700A. It also describes how to remove and replace circuit boards and other components and how to obtain customer services when you need them. The material in this section is designed to guide you through board and module replacement, but not component repair. If the instrument does not function properly, troubleshooting and corrective measures should be taken immediately to prevent additional problems.

### *CAUTION*

*The following procedures should be performed only by qualified service personnel. Performing these procedures incorrectly could damage the instrument. Refer all repair and replacement procedures to a qualified service technician.*

## PREVENTIVE MAINTENANCE

Preventive maintenance consists of cleaning, visual inspection, performance checking, and, if needed, readjustment. The VM700A requires little periodic maintenance. The preventive maintenance schedule established for the instrument should be based on the environment in which it is operated and the amount of use. Under average conditions, scheduled preventive maintenance should be performed every 12 months of operation.

### *CAUTION*

*Cleaning and general care of the VM700A should be performed only when the instrument is powered off and the power cord removed from electrical mains.*

### Tools Required

- Clean, non-abrasive cloth.
- Non-abrasive liquid glass cleaner.
- Isopropyl alcohol.
- Static free vacuum cleaner with small brush attachment.

### Cleaning

The instrument should be cleaned often enough to prevent dust or dirt from accumulating. Dirt acts as a thermal insulating blanket that prevents effective heat dissipation, and can provide high-resistance electrical leakage paths between conductors or components in a humid environment.

Exterior — Clean the dust from the outside of the instrument by wiping with a soft cloth. You may use a brush to remove dust from around the selector buttons, knobs, and connectors. Hardened dirt may be removed with a cloth dampened in water that contains a mild detergent or non-abrasive glass cleaner. Abrasive cleaners should not be used.

CRT — Clean the crt touch screen with a soft, lint-free cloth dampened with glass cleaner.

Interior — Use low-pressure dry air to remove accumulated dust and dirt (high-velocity air can damage some parts). Hardened dirt or grease may be removed with a cotton swab or pipe cleaner dampened with isopropyl alcohol. Abrasive cleaners should not be used. If the circuit board assemblies must be removed for cleaning, follow the instructions in the removal and replacement procedures of this section.

After cleaning, allow the interior to thoroughly dry before applying power to the instrument.

***CAUTION***

*Do not allow water to get inside any enclosed assembly or component. Do not clean any plastic materials with organic cleaning solvents, such as benzene, toluene, xylene, acetone, or similar compounds, because they may damage the plastic.*

### The Touch Screen and the Front Bezel Air Filters

When the touch screen of the VM700A becomes dirty through normal use, clean it by carefully applying a small quantity of glass cleaner and wiping the screen dry with the clean, non-abrasive cloth.

At regular intervals, inspect the front bezel air filters for accumulated dust.

***NOTE***

*You can better see the filters through the air intake slots if you shine a bright light on the front of the instrument.*

When you see accumulated dust on the front bezel air filters, carefully vacuum the front of the instrument to remove it.

## Visual Inspection

After cleaning, carefully check the instrument for defective connections, damaged parts, and improperly seated transistors, integrated circuits, or circuit boards. The remedy for most visible defects is obvious; however, if heat-damaged parts are discovered, determine the cause of overheating before replacing the damaged part, to prevent additional damage.

Periodic checks of the transistors and integrated circuits are not recommended.

## STATIC-SENSITIVE COMPONENTS

This instrument contains electrical components that are susceptible to damage from static discharge. Static voltages 1 kV to 30 kV are common in unprotected environments. Table 3-1 shows the relative static discharge susceptibility of various semiconductor classes.

Observe the following precautions to avoid damage:

1. Minimize handling of static-sensitive components.
2. Transport and store static-sensitive components or assemblies in their original containers, on a metal rail, or on conductive foam. Label any package that contains static-sensitive components or assemblies.

**Table 3-1**
**Static Susceptibility**

| Relative Susceptibility Levels[1] | Voltage |
|---|---|
| MOS and CMOS | 100 - 500 V |
| ECL | 200 - 500 V |
| Schottky Signal Diodes | 250 V |
| Schottky TTL | 500 V |
| HF Bipolar Transistors | 400 - 600 V |
| JFETs | 600 - 800 V |
| Linear microcircuits | 400 - 1,000 V (est.) |
| Low-Power Schottky TTL | 900 V |
| TTL | 1,200 V |

3. Discharge the static voltage from your body, by wearing a wrist grounding strap, while handling these components. Servicing static-sensitive assemblies or components should be done only at a static-free work station by qualified personnel.
4. Nothing capable of generating or holding a static charge should be allowed on the work station surface.
5. Keep the component leads shorted together whenever possible.
6. Pick up the components by the body, never by the leads.
7. Do not slide the components over any surface.
8. Avoid handling components in areas that have a floor or work surface covering capable of generating a static charge.
9. Use a soldering iron that is connected to earth ground.
10. Use only special anti-static, suction, or wick-type desoldering tools.

## TROUBLESHOOTING

The material contained here is general and is not intended to cover specific cases. Note that the manual itself is considered a troubleshooting aid, and as such a brief discussion of its contents is in order.

### Troubleshooting Aids

#### Foldout Pages

The foldout pages at the back of the manual contain information that is useful in troubleshooting the instrument. Schematic diagrams and circuit board illustrations are found there.

**Diagrams** - Schematic diagrams are the most often used troubleshooting aids. The circuit number and electrical value of each component is shown on the diagram. The first page has definitions of the symbology used on the schematic diagrams. Refer to the Replaceable Electrical Parts list for a complete description of each component. Circuits that are mounted on circuit boards or assemblies are enclosed in a border, with the name and assembly number shown on the border.

[1] Voltage equivalent for levels (voltage discharged from a 100 pF capacitor through a 100 Ω resistance.

**NOTE**

*Check the Change Information section in the rear of the manual for corrections and modifications to the instrument and the manual.*

**Board Illustrations** - Electrical components, connectors, and test points are identified on circuit board illustrations, which are located on the back of a preceding schematic diagram. Circuit boards are grid numbered, with the lowest number in the upper left corner; highest number in the lower right.

**Parts Locating Charts** - The schematic diagrams and circuit board illustrations are assigned location grids, and a parts locating chart (for each schematic diagram) gives grid locations of components on the schematic and the circuit board.

**Assembly and Circuit Numbering** - The circuit board assemblies are assigned assembly numbers. Fig. 3-2 shows the circuit board assembly locations for this instrument.

### Parts Lists

There are two separate parts lists in this manual. The Replaceable Electrical Parts List precedes the schematic diagrams and circuit board illustrations. The Replaceable Mechanical Parts List, accompanied by exploded view drawings, follows the schematic diagrams and circuit board illustrations.

**Replaceable Electrical Parts List** - This list is arranged by assembly number. The list begins with the part numbers for the major assemblies (etched circuit boards). Each circuit board is identified by an A# (Assembly Number).

The circuit numbers of the individual components in the parts list is made up by combining the assembly number with the individual circuit number.

EXAMPLE: R117 on Assembly (circuit board) A3 would be listed in the Replaceable Electrical Parts List as A3R117.

**NOTE**

*Always consult the parts list for part numbers and descriptions when ordering replacement parts. Some parts may have been replaced or have a different part number in an individual instrument. Also check the "Change Information" at the back of the manual for the most recent changes.*

**Replaceable Mechanical Parts List**- This list is arranged so that it corresponds to the exploded view drawing for major instrument components.

## Major Assembly Interconnection

Signals and power supply voltages are passed through the instrument by a system of interconnecting cables. The connector holders on these cables have numbers that identify terminal connectors; numerals used are from 2 up. A triangular key symbol is used to identify pin 1 on the circuit board to assist in aligning the correct pins on the mating connector.

## General Troubleshooting Techniques

The following procedure is designed to assist in isolating problems, which in turn expedites repairs and minimizes down time.

1. Ensure that the malfunction actually exists. This is done by running the diagnostics to ensure that the instrument is operating as intended by Tektronix. The diagnostics are described in the diagnostics section of this manual.
2. Determine and evaluate all trouble symptoms. This is accomplished by isolating the problem to a general area such as an assembly.

***CAUTION***

*Use extreme care when probing with meter leads or probes, because of the high component density and limited access within the instrument. The inadvertent movement of leads or a probe could cause a short circuit or transient voltage capable of destroying components.*

3. Determine the nature of the problem. Attempt to make the determination of whether the instrument is out of calibration or if there has been a component failure. Once the type of failure has been determined, identify the functional area most likely at fault.
4. Visually inspect the suspect assembly for obvious defects. Most commonly these will be broken or loose components, improperly seated components, overheated or burned components, chafed insulation, etc. In the case of overheated components, determine the cause of overheating and correct the cause before re-applying power.
5. Use successive electrical checks to locate the source of the problem. At times it may be necessary to change a calibration adjustment to determine if a circuit is operational, but since this can destroy instrument calibration, care should be exercised. Before changing an adjustment, note its position so that it can be returned to its original setting.
6. Determine the extent of the repair. If the necessary repair is complex, it may be advisable to contact your local Tektronix field office or representative before continuing. Repair of the VM700A generally consists of replacing defective modules. If the repair is minor, see the parts list for replacement information.
7. Remove defective modules and exchange them with the factory. If repair requires replacing a circuit board or other assembly, the removal and replacement procedures for the assemblies can be found in the section *Maintenance and Replacement Procedures*. Refer also the section *If You Need Customer Services* for information on exchanging defective modules with the factory.

## CORRECTIVE MAINTENANCE

**NOTE**

*No user repair should be attempted during the warranty period.*

### Obtaining Replacement Parts

Replacement parts are available through the local Tektronix, Inc. field office or representative.

Changes to Tektronix instruments are sometimes made to accommodate improved components, as they become available, and to improve circuit performance. The VM700A also accommodates various firmware versions that either add new measurements or made improvements to existing measurements. Therefore, it is important to include the following information when ordering parts:

1. Part Number
2. Instrument Type or Number
3. Serial Number
4. Firmware Options installed and Version Numbers.

If a part has been replaced with a new or improved part, the new part will be shipped (if it is a direct replacement). If the part is not directly replaceable, the local Tektronix field office or representative will contact the customer concerning any changes. After any repair, circuit readjustment may be required.

Servicing the VM700A Video Measurement Set consists of isolating faults by performing diagnostic and troubleshooting functions and then replacing defective modules. For information on troubleshooting the VM700A, see Diagnostics and Troubleshooting.

Table 3-2 lists the VM700A modules that may be exchanged. Refer to the VM700A *Replaceable Electrical Parts Lists* in this manual for the part numbers of VM700A exchange modules and other parts. Refer to the *Replaceable Electrical Parts Lists* of the Option 40/41 Service manual for Option 40/41 part numbers.

**NOTE**

*Module service and exchange should be performed only by qualified service personnel.*

## CUSTOMER SERVICES

For service, parts, module exchange, returns, or technical support, call the VM700A Hotline between 8:00 am and 5:00 pm Pacific Time, Monday through Friday at this phone number:

**(503) 627-1700**

VM700A Hotline personnel will direct your inquiry to the proper support group.

### Exchanging VM700A Modules

If you call for a VM700A module exchange, you must supply the instrument serial number, the firmware version number (accessed by pressing the Configure button), and the module's complete part number to ensure receiving the correct replacement. If the module you request is in stock, it will usually be sent to you the same day.

**Table 3-2**
**Exchanged VM700A Modules**

| Assembly Number | Module |
|---|---|
| A1 | Analog Input assembly |
| A2 | Genlock board |
| A3 | ADC board |
| A4 | Filter switch board (with filters) |
| A5 | CPU board |
| A6 | EPROM board |
| A7 | Data acquisition board |
| A8 | Controller board |
| A9 | Display Memory board |
| A10 | Front Panel assembly |
| A12 (Option 40/41) | Audio Processor board |
| A13 (Option 40) | Analog Input board |
| A14A1 | CRT Display assembly |
| A15 | Power supply |
| A17 (Option 41) | 6 Balanced Input board |
| A18 | Data Acquisition/Controller board |
| A19 (Option 48) | GPIB board |

After you receive the replacement module, the faulty module must be returned immediately to Tektronix via prepaid common-carrier freight. Use the packaging material from the replacement module and the furnished shipping label to prepare the faulty module for shipment. Ship the faulty module to:

**Tektronix Inc.**
Television Service Module Exchange Center
Tektronix Howard Vollum Park M/S 58-725
Beaverton, Oregon 97077-0001

Tektronix charges a standard fee for each out-of-warranty module exchanged. This fee will be quoted when you request the exchange module. If the faulty module is not received at the above address within 30 days of your request of an operating exchange module, the full catalog price of the module will be invoiced.

Your module is not eligible for exchange if:

1. The module is damaged during repair attempts by personnel other than Tektronix Representatives.
2. The module is damaged through improper use or connection to incompatible equipment.

3. The module has been modified by the customer.
4. The module has been modified to the customer's specifications by Tektronix.

In these cases Tektronix invoices the full catalog price of a replacement module. Call your local Tektronix field office for further information.

## Customer Service Outside the U.S.

Customers outside the United States should contact their local Tektronix sales subsidiary or distributor for details on servicing the VM700A.

## REMOVING AND REPLACING INSTRUMENT COVER PANELS

Most VM700A circuit boards may be accessed for servicing by first removing three sheet-metal panels that cover the top and two sides of the instrument. Removing the keypad board assembly (and other display and control components) from the front of the instrument also requires removing the instrument's bottom cover panel.

The four cover panels are positioned with slotted corner extrusions and fastened with screws to the instrument rear panel. Removing each cover panel requires removing its fastening screws on the rear panel and sliding the panel toward the rear of the instrument and off the tracks. Replacing each cover panel is the reverse of the removal procedure.

Use the following procedures to remove and replace the VM700A cover panels.

### Tools Required

Pozidriv® screwdriver, 1X.

### Removing and Replacing a Cover Panel

**WARNING**

*This instrument contains hazardous voltages. Before removing instrument covers or performing disassembly/reassembly procedures, always shut off instrument power at the rear-panel switch and disconnect the power cord from electrical mains. Failure to do this may result in dangerous electrical shock.*

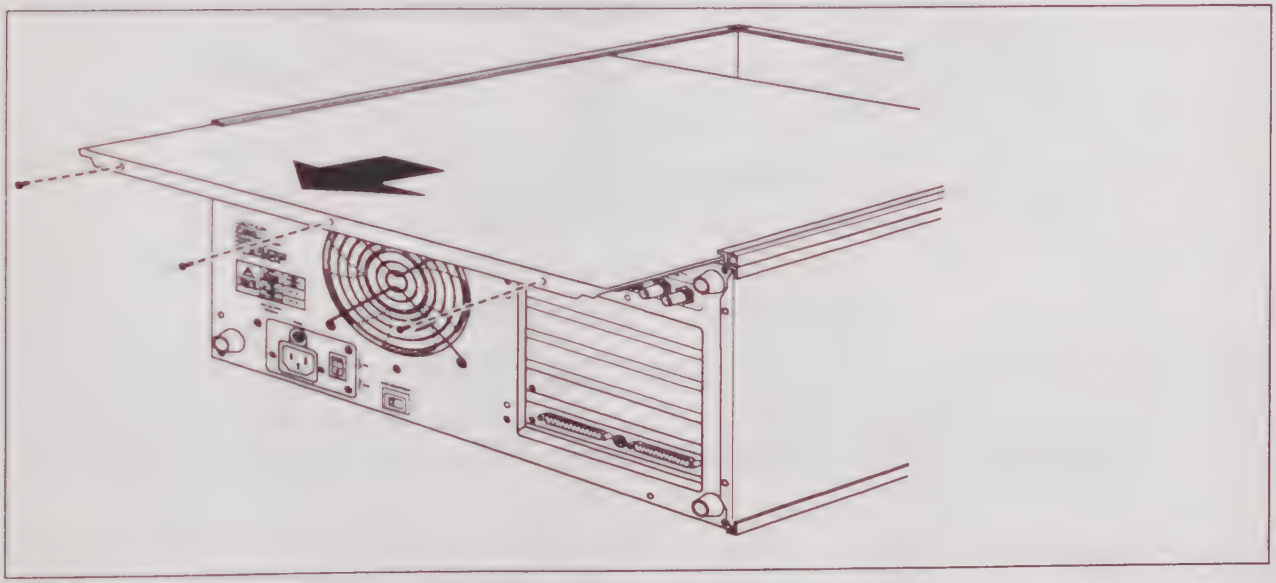

**Figure 3-1. Removing a cover panel.**

1. Remove the screws at the rear edge of the instrument cover panel.
2. Remove the panel by sliding it carefully to the rear of the instrument and off its tracks (see Figure 3-1).
3. Set the panel aside.

Replace the cover panel by guiding it onto its tracks, sliding it all the way to the front of the instrument, and installing the screws.

## LOCATING THE MAJOR VM700A COMPONENTS

As you face the front of the VM700A (in its operating position), the CPU (A5) and EPROM/NVRAM (A6) boards are located in the left-side cardcage. The controller (A8), data acquisition (A7), and display memory (A9) boards are located in the right-side cardcage. The analog section boards (analog input A1, genlock A2, ADC A3, and filter switch A4) are mounted, with screws and standoffs, on a bulkhead under the top cover panel (see Figure 3-2).

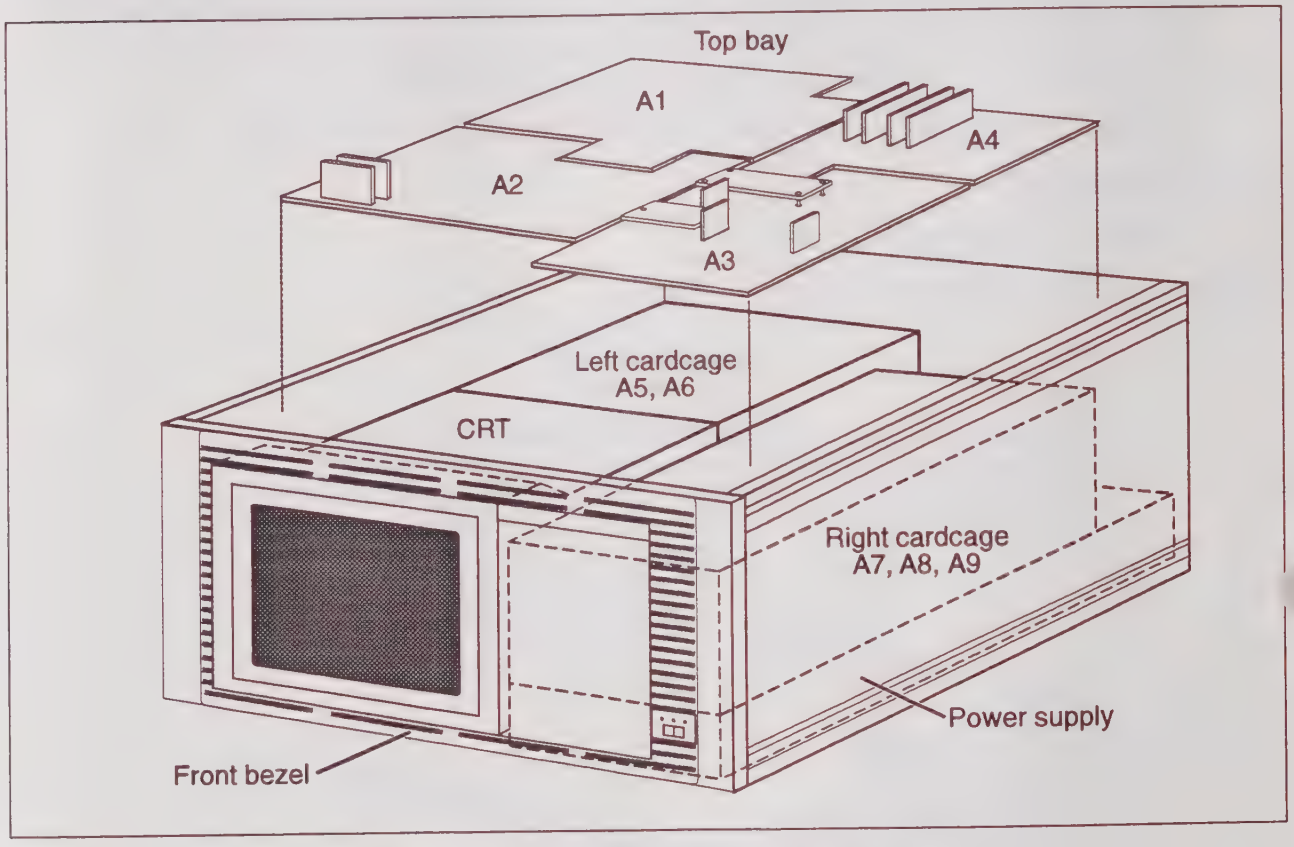


**Figure 3-2. Major components of the VM700A.**

## REMOVING AND REPLACING THE CPU AND EPROM/NVRAM BOARDS

You may use these procedures to remove and replace both boards. To remove these boards you must first remove the left side cover and carrying handle and the retainers and screws holding the boards in the cardcage.

### Tools Required

- Flat-blade screwdriver, $\frac{3}{16}$ or $\frac{1}{4}$ inch blade.
- Pozidriv® screwdriver, 1X.

### Removing the Board

1. Remove the left side cover panel (see *Removing and Replacing a Cover Panel* for more information).

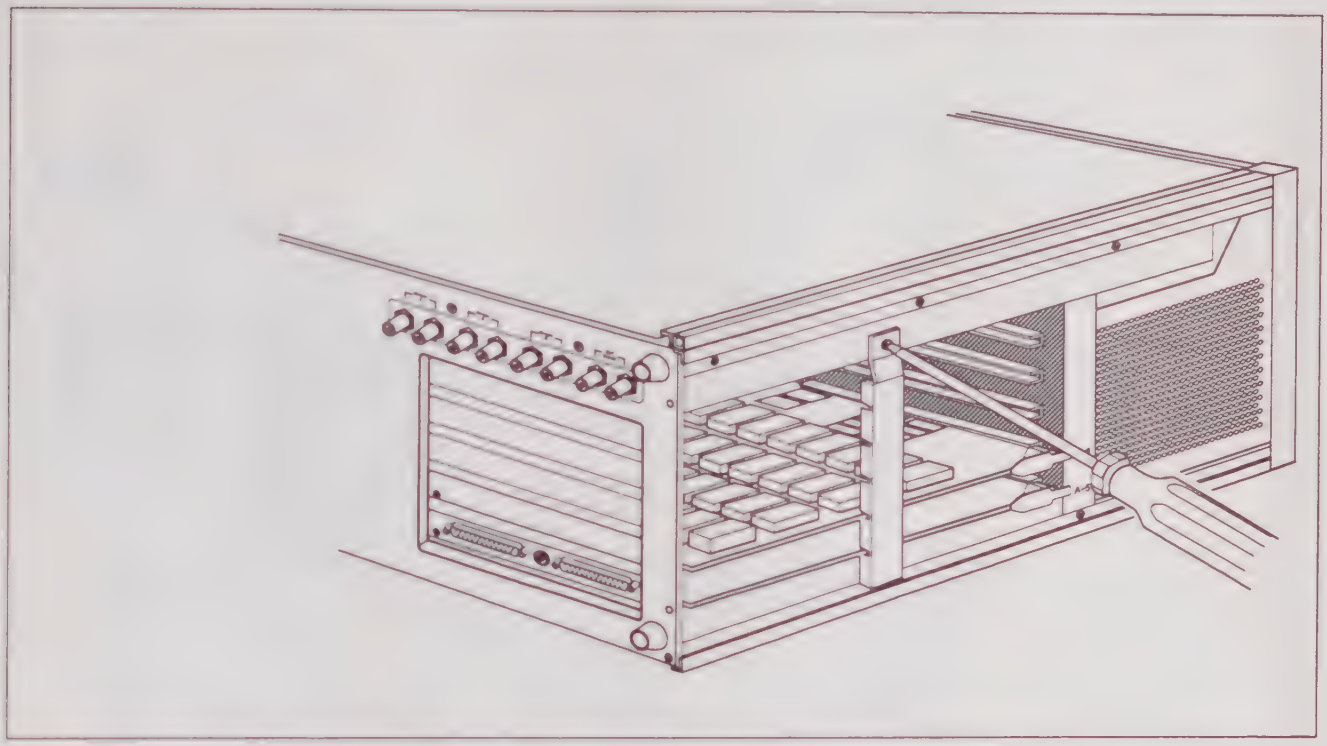

**Figure 3-3. Removing the cardcage center support.**

2. Remove the retaining screw from the cardcage center support and remove the center support from the cardcage (see Figure 3-3).
3. Remove the circuit board retaining screw from the appropriate circuit board.

*NOTE*

*It may also be necessary to remove or loosen the circuit board retaining screw immediately above the one retaining the circuit board you are removing.*

4. Unplug the board using the ejector tab and remove the board from the cardcage.

## Replacing the Board

1. Guide the board onto the cardcage track and slide it into the cardcage connector (see Figure 3-4).
2. Align the circuit board connector pins with the cardcage connector and seat the board in the connector.
3. Replace the circuit board retaining screw.
4. Replace the circuit board center support and screw.
5. Replace the carrying handle cover and screws (see *Removing and Replacing a Cover Panel* for more information).

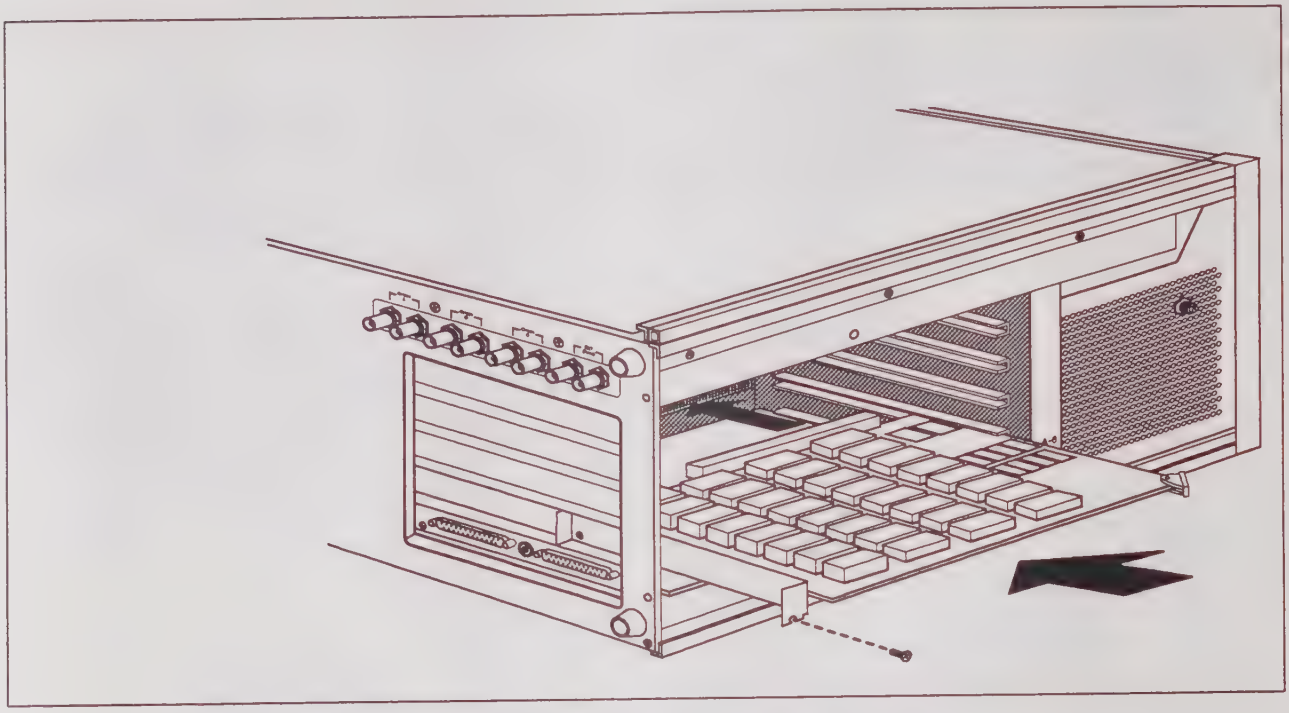

Figure 3-4. Installing a board in the cardcage.

## REMOVING AND REPLACING THE CONTROLLER, DATA ACQUISITION, AND DISPLAY MEMORY BOARDS

As you face the front of the VM700A (in the operating position), the controller (A8), data acquisition (A7), and display memory (A9) boards are located in a cardcage on the right side. To remove these boards you must first remove the right side cover and the cardcage retainer. You must also disconnect one or more cables from each board. The following procedures explain how to remove these boards.

**WARNING**

*This instrument contains hazardous voltages. Before removing covers or performing disassembly/reassembly procedures, always shut off instrument power at the rear-panel switch and disconnect the power cord from electrical mains. Failure to do this may result in dangerous electrical shock.*

### Tools Required

- Flat-blade screwdriver, $\frac{3}{16}$ or $\frac{1}{4}$ inch blade.
- Pozidriv® screwdriver, 1X.

### Gaining Access to the Right Side Cardcage

Remove the instrument cover (see *Removing and Replacing a Cover Panel* for more information) and cardcage retainer to expose the controller, data acquisition, and display memory boards for removal.

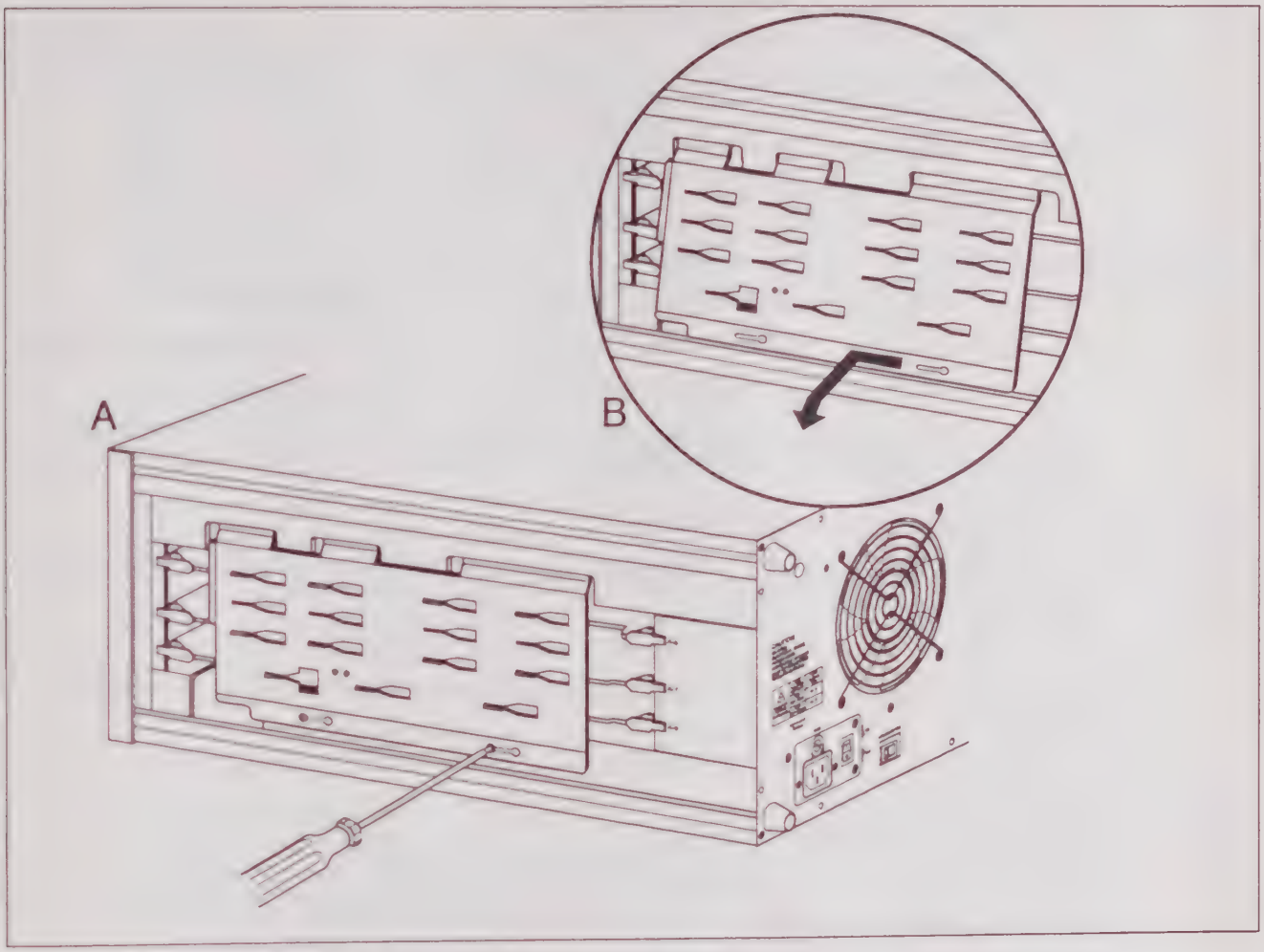


**Figure 3-5. Loosening the screws on the right cardcage retainer.**

1. After removing the cover panel loosen (but do not remove) two screws on the front of the cardcage retainer (see Figure 3-5).
2. Slide the retainer carefully to the left, until the screw heads clear the slots, and remove it.

## Removing the Controller Board (A8)

The controller board occupies the cardcage top slot (slot A8). To remove this board you must first disconnect five ribbon cables.

1. Spread the cable ejector tabs to disconnect each cable from the board.
2. Applying pressure to the board's ejector tabs, remove the board from the cardcage.

## Replacing the Controller Board

1. Guide the board onto the cardcage track and slide it into the cardcage connector.
2. Ensuring that it aligns with the cardcage connector, press firmly to seat the board in the connector.
3. Reinstall each of the five cables, ensuring that they are firmly seated in the board connectors.
4. Replace the cardcage retainer and instrument cover (see *Replacing the Cardcage Retainer and Instrument Cover* for more information).

## Removing the Data Acquisition Board (A7)

The data acquisition board (A7) usually occupies the second slot of the cardcage. Before removing this board you must disconnect a ribbon cable.

1. Spread the cable ejector tabs to disconnect the cable.
2. Apply pressure to the board's ejector tabs and remove the board from the cardcage.

## Replacing the Data Acquisition Board

1. Guide the board onto the cardcage track and slide it into the cardcage connector.
2. Ensuring that it aligns with the cardcage connector, seat the board in the connector.
3. Reinstall the cable, ensuring that it is fully seated in the board connector.
4. Replace the cardcage retainer and instrument cover (see *Replacing the Cardcage Retainer and Instrument Cover* for more information).

## Removing the Display Memory Board (A9)

The display memory board occupies the bottom slot in the cardcage (slot A9). Before removing this board you must disconnect two cables.

1. Spread its cable ejector tabs to disconnect the larger of the two cables.
2. Disconnect the smaller cable by carefully pulling on its connector to separate it from the board.
3. Apply pressure to the board's ejector tabs and remove the board from the cardcage.

## Replacing the Display Memory Board

1. Guide the board onto the cardcage track and slide it into the cardcage connector.
2. Ensuring that it aligns with the cardcage connector, seat the board in the connector.
3. Reinstall the cables, ensuring that they are fully seated in their board connectors.
4. Replace the cardcage retainer and instrument cover (see *Replacing the Cardcage Retainer and Instrument Cover* for more information).

## Replacing the Cardcage Retainer and Instrument Cover

You may use the following procedure to replace the cardcage retainer and the instrument cover.

1. Replace the cardcage retainer by first inserting its upper tabs through the chassis slots. Complete the installation by guiding the retainer slots carefully over the circuit board locator tabs.
2. When the screw heads extend through the slotted holes, lock the cardcage retainer in position by sliding it to the right.
3. Tighten the retaining screws.
4. Replace the instrument cover (see *Removing and Replacing a Cover Panel* for more information).

## REMOVING AND REPLACING THE ANALOG-SECTION BOARDS

The analog section consists of the A1, A2, A3, and A4 circuit boards. Located in the top bay of the VM700A, these circuit boards may be accessed by first removing the instrument top cover panel. Removing and replacing these boards also requires removing the right side cover panel and cardcage retainer to disconnect and replace various cables.

Because of cable routing, analog-section boards must be removed in a specific order. For example, to remove and replace the analog input board, the filter switch board must first be removed. The following procedures are organized for proper analog-section board removal and replacement.

### Tools Required

Pozidriv® screwdriver, 1X, 2X.

### Removing and Replacing the Filter Switch Board (A4)

Removing and replacing the filter switch board consists of removing the instrument top and right-side covers, removing a flat cable assembly, disconnecting two wires and a cable, and removing the screws holding the board in position. With the screws removed the board may be lifted from the VM700A chassis and set aside. Replacing this board is the reverse of the removal procedure. You may use the following procedures to remove and replace the filter switch board.

#### Removing the Filter Switch Board

1. Remove the instrument top and right-side covers (see *Removing and Replacing a Cover Panel* for more information).
2. Disconnect the power bus cable at its five connectors, remove and set it aside (see Figure 3-6).
3. Remove the wire connecting A4 J915 to A1 J922 at the J922 end only.
4. Remove the wire connecting A4 unmarked to A1 J923 at the J923 end only.

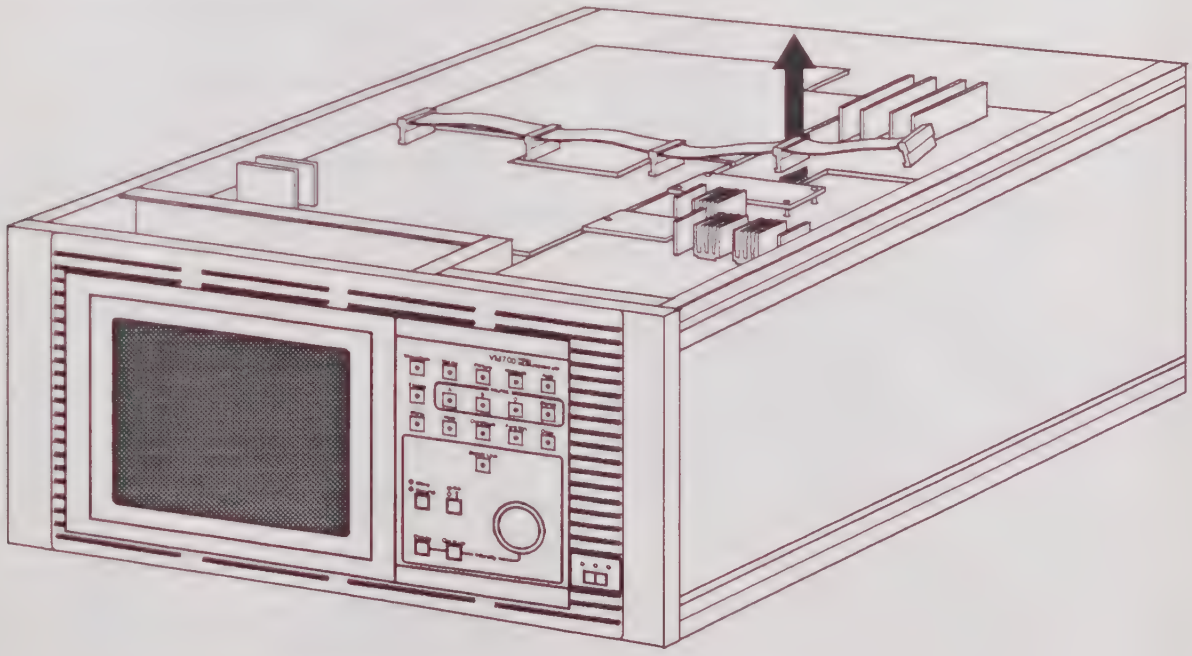

**Figure 3-6. Disconnecting the power bus cable.**

5. Remove the cardcage retainer (see *Gaining Access to the Right Side Cardcage* for information on how to perform this procedure).
6. Remove the cable from its connector at J221 on the controller board (A8).
7. Remove the five board retaining screws.
8. Carefully lift the board from the VM700A chassis and set it aside.

### Replacing the Filter Switch Board

1. Hold the insulator sheet against the board to prevent folding and place the board in the chassis and onto it's bulkhead standoffs (be sure the cable extends out the side of the chassis).
2. Install the five board retaining screws.
3. Install the cable on its connector at J221 (on the controller board).
4. Install the power bus cable on its five connectors.
5. Install the right-side cardcage retainer (see *Replacing the Cardcage Retainer and Instrument Cover* for information on how to perform this procedure).
6. Replace the wire connecting A4 J915 to A1 J922.
7. Replace the wire connecting A4 unmarked to A1 J923.
8. Replace the instrument top and right-side covers (see *Removing and Replacing a Cover Panel* for more information).

## Removing and Replacing the Analog Input Board (A1)

Removing and replacing this board consists of removing the filter switch board, removing two wires and a ribbon cable, and removing the board's retainer screws. With the screws removed the board may be lifted from the VM700A chassis and set aside. Replacing the board is the reverse of this procedure. You may use the following procedures to remove and replace the analog input board.

### Removing the Analog Input Board

1. Remove the filter switch board (see *Removing the Filter Switch Board* for more information).
2. Disconnect the wire at J132 and the shielded cable at J550 and move them aside.
3. Disconnect the ribbon cable at J325 on the controller board (the second cable from the right).
4. At the back of the instrument remove the screws holding the signal input connector to the instrument rear panel (see Figure 3-7).
5. Remove the eight board retaining screws (seven on the perimeter and one in the center) and carefully lift the board from the VM700A chassis.

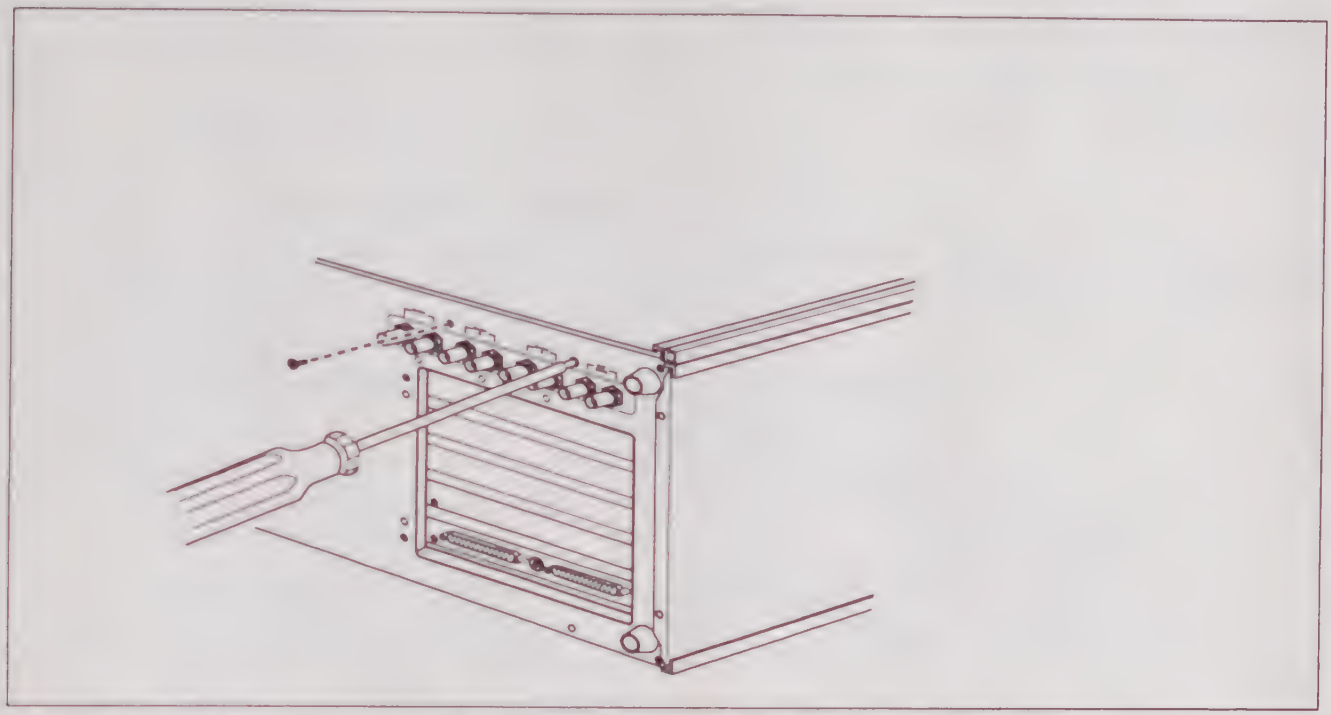

Figure 3-7. Removing the attachment screws from the analog input board's signal input connector plate.

### Replacing the Analog Input Board

1. Carefully place the board in the VM700A chassis by guiding the signal input connectors through the slot in the rear panel and positioning the board on its bulkhead standoffs. Make sure the ribbon cable extends through the slot in the right side of the chassis.
2. Replace the eight board retaining screws and the screws holding the signal input connector to the instrument rear panel.
3. Connect the ribbon cable at J325 on the controller board.
4. Connect the wire at J132 and the shielded cable at J550.
5. Replace the filter switch board (see *Replacing the Filter Switch Board* for more information).
6. Replace the instrument top and right-side covers (see *Removing and Replacing a Cover Panel* for more information).

## Removing and Replacing the ADC Board (A3)

Removing and replacing the ADC board consists of removing the instrument top and right-side covers, disconnecting three flat cable assemblies, disconnecting a shielded cable, and removing the screws holding the board in position. With the screws removed the board may be lifted from the VM700A chassis and set aside. Replacing this board is the reverse of the removal procedure.

You may use the following procedures to remove and replace the filter switch board.

### Removing the ADC Board

1. Remove the instrument top and right-side covers (see *Removing and Replacing a Cover Panel* for more information).

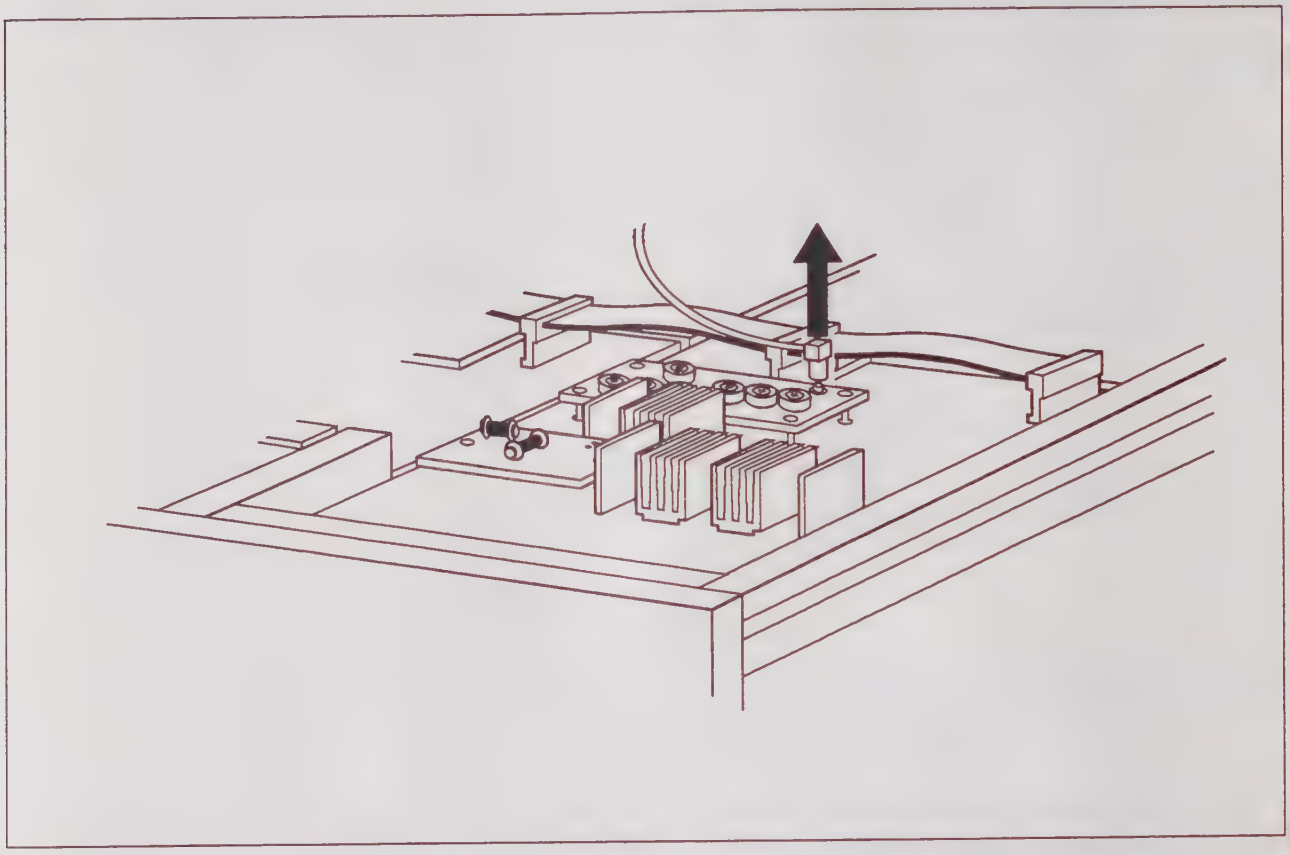

**Figure 3-8. Disconnecting the shielded cable at J765.**

2. Disconnect the flat 10-conductor cable between J111 and J195 (on the genlock board). We recommend that you remove the connector at the genlock-board end (J195) because it's easier to access.
3. Disconnect the shielded cable between J765 (located on the ADC board's filter board) and J550 on the analog input board (see Figure 3-8).
4. At the controller board (right side of the instrument), disconnect the cable at J828.
5. Disconnect the power bus cable at its five connectors, remove and set it aside.
6. Remove the five board retaining screws and carefully lift the board from the VM700A chassis.

### Replacing the ADC Board

1. Hold the insulator sheet against the board to prevent folding and carefully place the board in the chassis and onto it's bulkhead standoffs (be sure the cable extends out the side of the chassis).
2. Install the five board retaining screws.
3. Install the cable on its connector at J828 (on the controller board).
4. Install the flat 10-conductor cable at J195 (on the genlock board).
5. Install the shielded cable at J765 (on the ADC board's filter board).
6. Install the power bus cable at its five connectors.

7. Install the right-side cardcage retainer and instrument cover (see *Replacing the Cardcage Retainer and Instrument Cover* for information on how to perform this procedure).
8. Replace the instrument top and right-side covers (see *Removing and Replacing a Cover Panel* for more information).

## Removing and Replacing the Genlock Board (A2)

Removing the genlock board consists of removing the VM700A top and right-side cover panels, removing the ADC board, disconnecting a flat cable and a wire, and removing seven screws. With the screws removed the board may be lifted from the VM700A chassis and set aside. Replacing this board is the reverse of the removal procedure.

You may use the following procedures to remove and replace the genlock board.

### Removing the Genlock Board

1. Remove the instrument top and right-side covers (see *Removing and Replacing a Cover Panel* for more information).
2. Remove the ADC board (see *Removing the ADC Board* for more information).
3. Disconnect the flat 10-conductor cable between J111 (on the ADC board) and J195. We recommend that you remove the connector at the genlock-board end (J195) because it's easier to access.
4. Disconnect the wire at J914.
5. Remove the seven board retaining screws and carefully lift the board from the VM700A chassis.

### Replacing the Genlock Board

1. Place the board carefully on its hardware standoffs, ensuring that the ribbon cable is positioned with its connector through the slot in the right side of the instrument chassis.
2. Install the seven board retaining screws.
3. Connect the wire at J914.
4. Connect the flat 10-conductor cable between J111 (on the ADC board) and J195.
5. Replace the ADC board (see *Replacing the ADC Board*) for more information.
6. Replace the instrument top and right-side covers (see *Removing and Replacing a Cover Panel* for more information).

## REMOVING AND REPLACING PLUG-IN FILTER MODULES

Four small plug-in filter modules (five on later filter-switch boards) are mounted vertically in a slotted housing on the filter switch board. On the VM700A, these modules occupy slots 2-5 (slots 1-5 on later filter-switch boards) of the filter housing.

Removable anti-alias and video delay filter modules are mounted on the ADC board. Each of these modules are retained with screws and standoff hardware.

Filters modules on both boards may be removed and replaced without removing the boards from the VM700A. This section describes removing and replacing plug-in filter modules on the filter switch and ADC boards.

## Removing and Replacing Plug-In Filters on the Filter Switch Board

### *WARNING*

*This instrument contains hazardous voltages. Before removing covers or performing disassembly/reassembly procedures, always shut off instrument power at the rear-panel switch and disconnect the power cord from electrical mains. Failure to do this could result in dangerous electrical shock.*

1. Remove the instrument top cover (see *Removing and Replacing a Cover Panel* for more information).

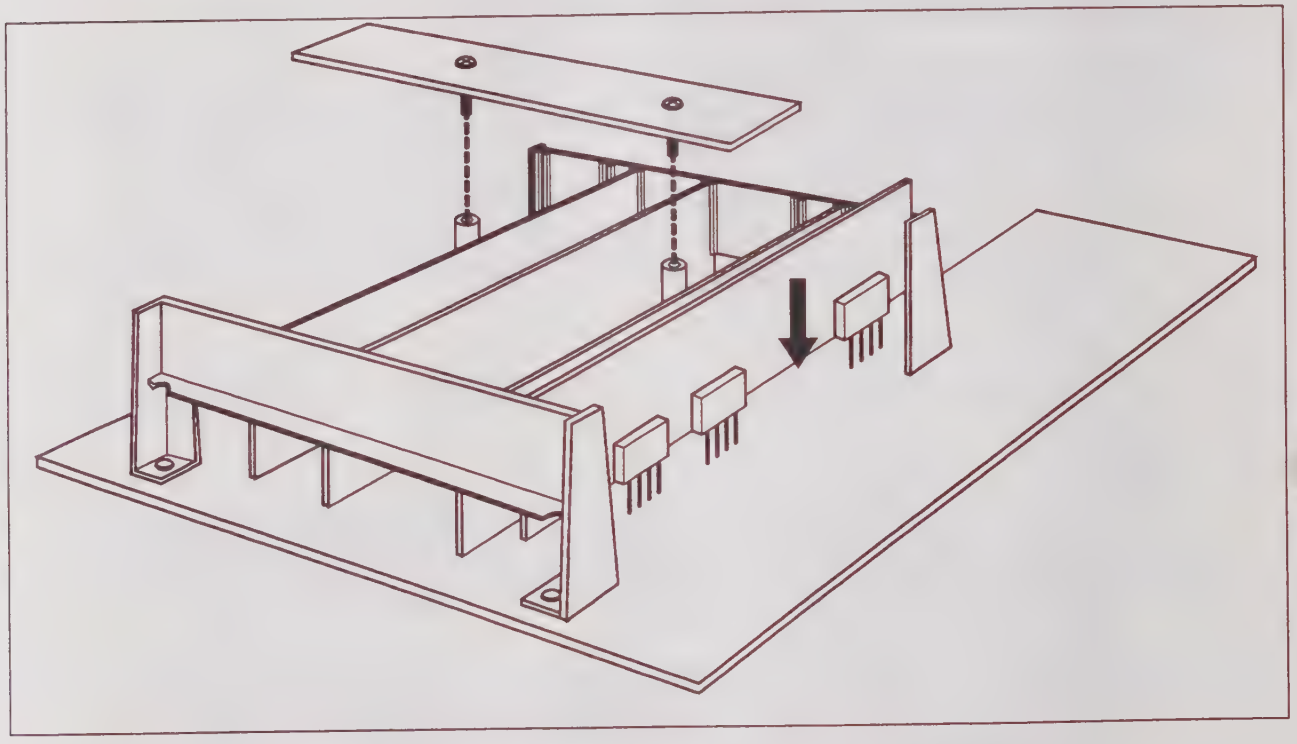

**Figure 3-9. Plug in filter modules on early filter switch boards.**

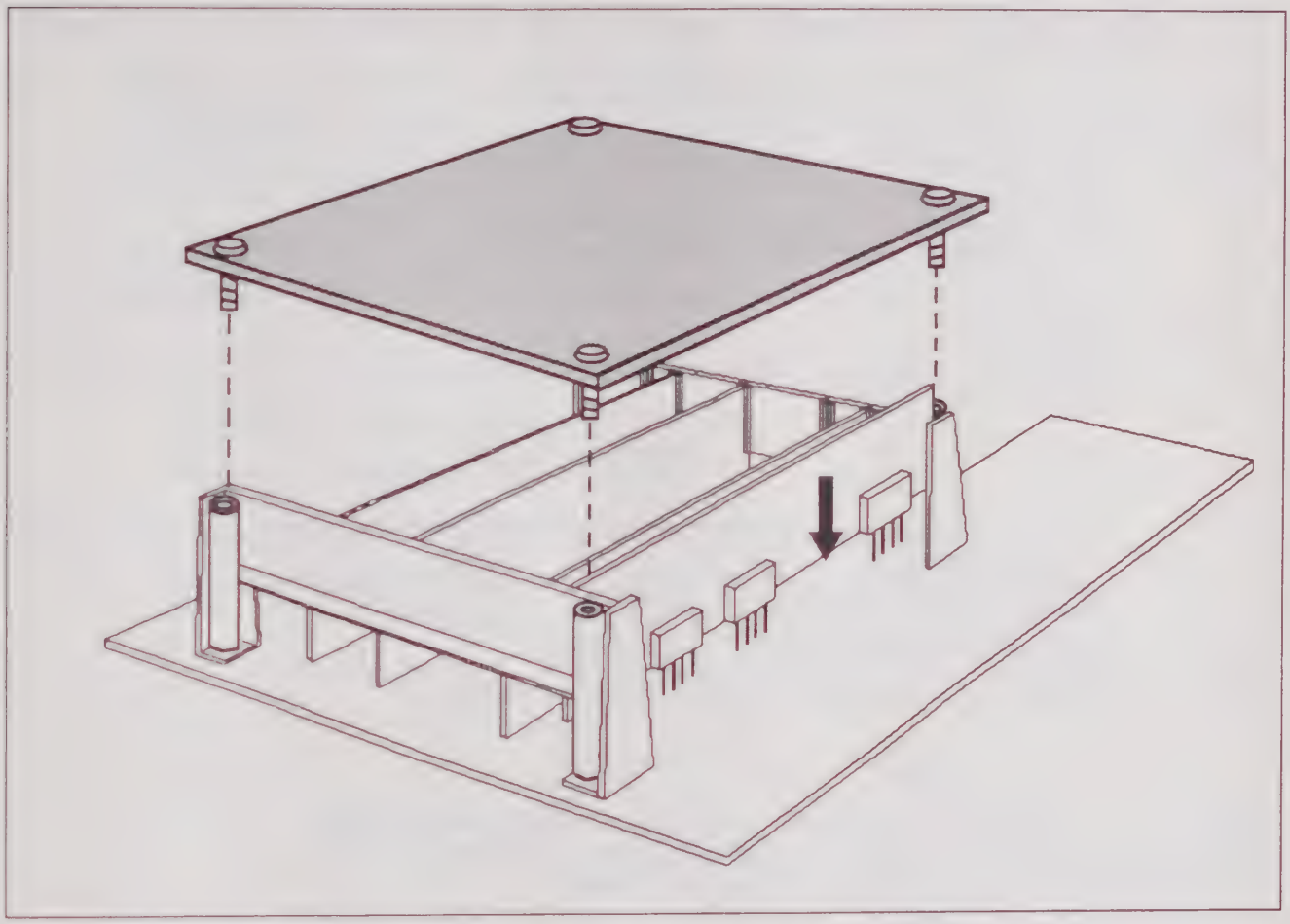

**Figure 3-10. Plug in filter modules on later filter switch boards.**

2. Remove the retaining clamp from the plug-in filter housing by removing two screws as shown in Figure 3-9 (on later filter switch boards, remove the retaining cover by removing the 4 screws, as shown in Figure 3-10).

3. Carefully remove the filter board from its housing by pulling it straight up and off its connectors.

### *NOTE*

*The position of the VM700A filters in the slots depends on the ship date of the instrument. On the early filter switch board, the filters include: high pass, low pass, differentiated step, and low-frequency noise. On later filter switch boards, the filters include: NTSC bandwidth limit, Chroma bandpass, IEEE low pass, differentiated step, and low-frequency noise.*

Filter-board replacement is the reverse of the above procedure.

## Removing and Replacing Plug-In Filters on the ADC Board

### WARNING

*This instrument contains hazardous voltages. Before removing covers or performing disassembly/reassembly procedures, always shut off instrument power at the rear-panel switch and disconnect the power cord from electrical mains. Failure to do this could result in dangerous electrical shock.*

1. Remove the instrument top cover (see *Removing and Replacing a Cover Panel* for more information).
2. If you are removing the anti-alias filter module, remove the shielded cable from its connector at J765.

### CAUTION

*Magnetic fields can alter inductor settings. Do not use magnetic tools to perform the following step.*

3. Remove the filter module's retaining screws.
4. Lift the filter module away from the ADC board.

Filter module replacement is the reverse of the above procedure.

### CAUTION

*When replacing the filter module, carefully guide its pin connectors onto the mating pins of the ADC board. Make sure the connectors align with the pins before pushing the module down on the standoffs.*

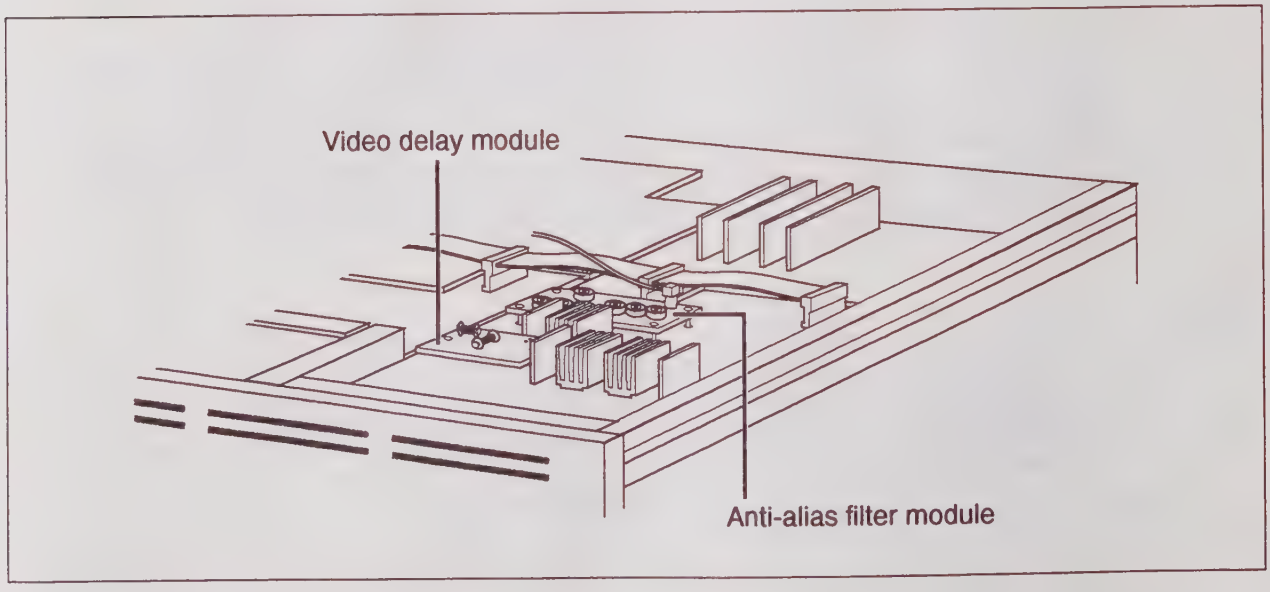


**Figure 3-11. Filter modules on the ADC board.**

## REMOVING AND REPLACING DISPLAY AND CONTROL COMPONENTS

This section describes removing and replacing the VM700A components responsible for instrument display and user interface. These components include the CRT assembly, the touch panel, and the keypad board assembly. Removing and replacing these components requires first removing the instrument cover panels, the CRT bezel, and (to remove the keypad board assembly) the right side cardcage retainer.

The following procedures describe removing and replacing these VM700A components.

### Tools Required

- Flat-blade screwdriver, $\frac{3}{16}$ or $\frac{1}{4}$ inch blade.
- Combination wrench or nut driver, $\frac{3}{16}$ inch.
- Pozidriv® screwdriver, 1X, 2X.

### Removing and Replacing the CRT Bezel

1. Remove and replace the instrument cover panels (see *Removing and Replacing a Cover Panel* for more information).

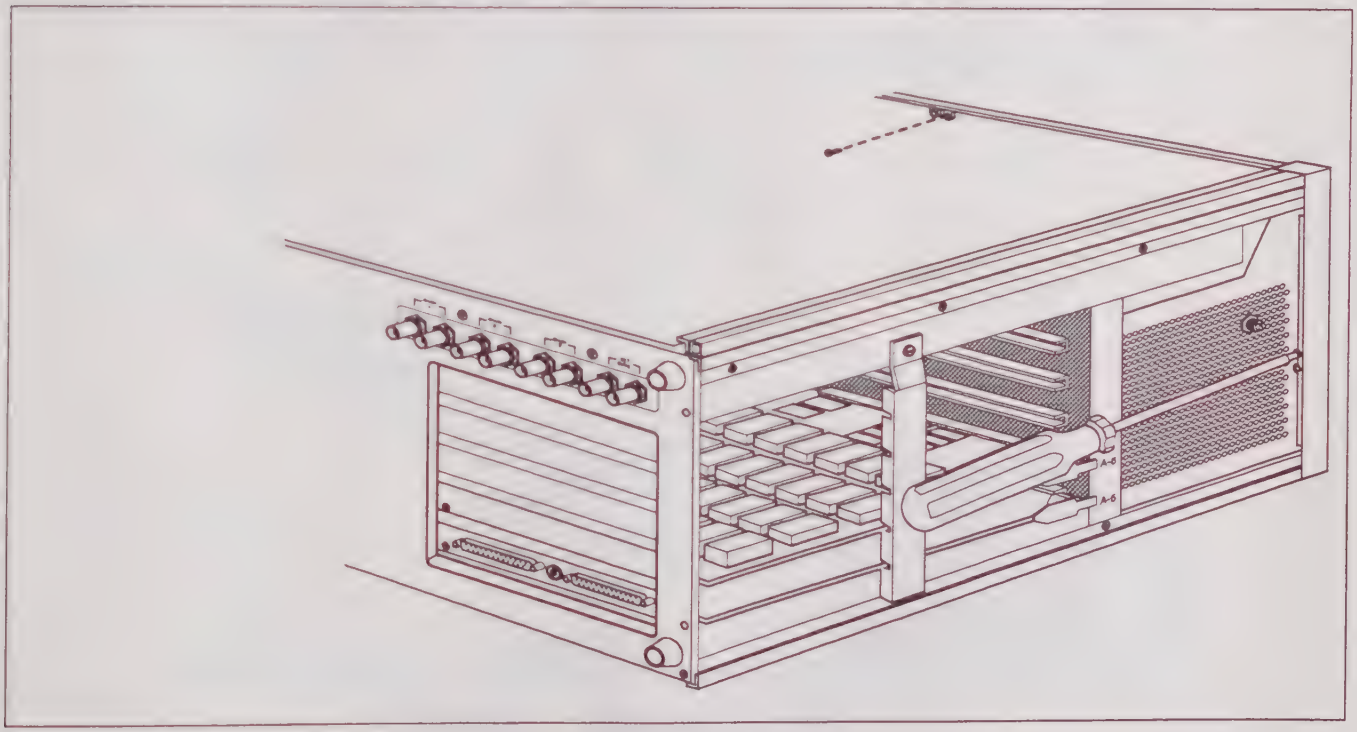

**Figure 3-12. Locating the bezel retaining screws.**

2. Remove the four screws holding the bezel to the front frame (see Figure 3-12).
3. Carefully separate the bezel from the frame and disconnect the 5-conductor cable from the ON/STDBY switch.
4. Lift the bezel away from the instrument and set it aside.

CRT bezel replacement is the reverse of the above procedure.

### CAUTION

*Use care in tightening the bezel retaining screws. The threaded bezel inserts can be stripped from the bezel if the screws are over-tightened.*

## Removing and Replacing the ON/STDBY Switch

1. Remove and replace the CRT bezel (*see Removing and Replacing the CRT Bezel* for more information).
2. From the circuit side of the ON/STDBY switch remove the two nuts holding the switch assembly to the bezel.
3. Separate the switch and its front plate from the bezel.

ON/STDBY switch replacement is the reverse of the above procedure.

## Removing and Replacing the Front Panel Board Assembly

1. Remove the CRT bezel (see the above procedure for more information).
2. Remove the right side cardcage cover (see *Gaining Access to the Right Side Cardcage* for more information).
3. Disconnect the cable at J822 on the display memory board.
4. Remove the seven flat-head screws holding the front panel board assembly to the VM700A front frame (see Figure 3-13).

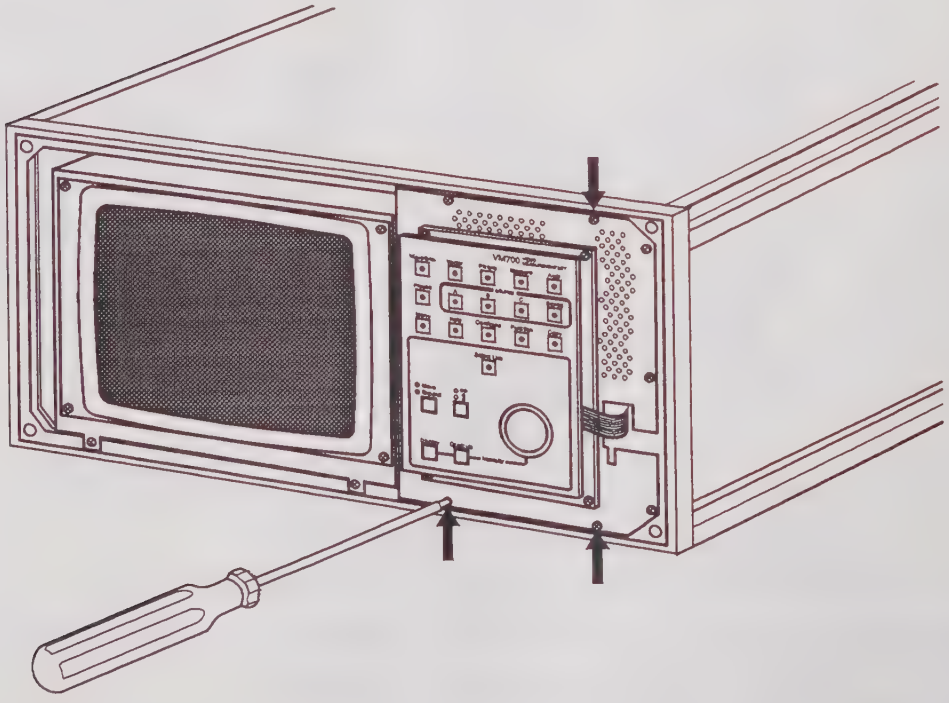

**Figure 3-13. Removing the retaining screws from the front panel board.**

5. Carefully separate the keypad board assembly from the instrument.
6. On the back of the keypad board assembly, remove the touch panel connector at J933 and the ground wire attached to the standoff.
7. Remove the front panel board assembly and set it aside.

Front panel board assembly replacement is the reverse of the removal procedure.

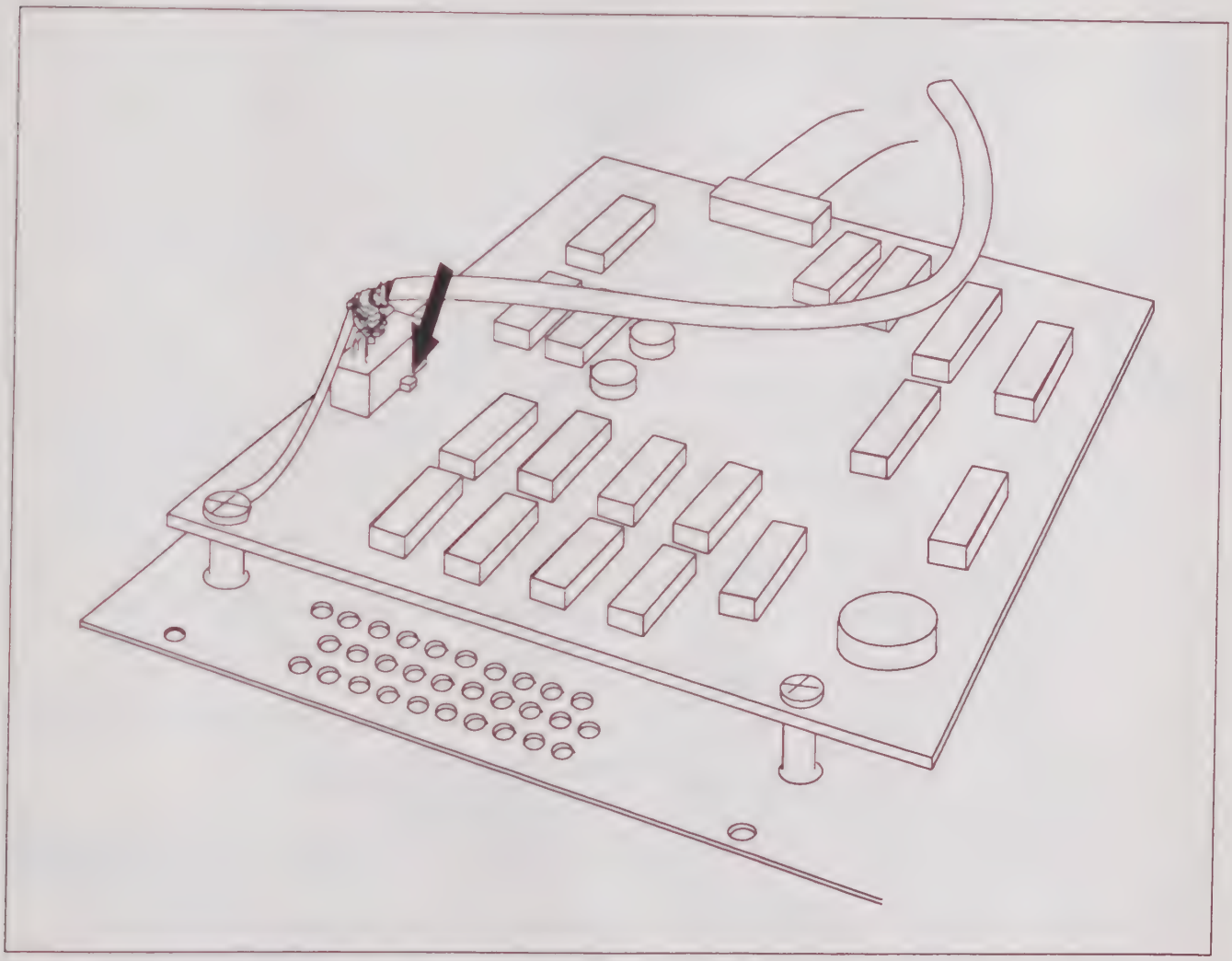

**Figure 3-14. Orienting connector J933 for installation on the front panel board.**

### *CAUTION*

*When reinstalling connector J933 on the front panel board assembly, orient the connector with its key facing the center of the board (see Figure 3-14). Any other connector orientation is incorrect and could cause component failure on instrument power up.*

## Removing and Replacing the CRT Touch Panel

1. Remove the CRT bezel (see *Removing and Replacing the CRT Bezel* for more information).
2. Remove the keypad board assembly (see *Removing and Replacing the Keypad Board Assembly* for more information).

**NOTE**

*It is not necessary to remove the ground wire on the keypad board assembly if you are removing just the CRT touch panel.*

**CAUTION**

*Use care when handling the wiring harness to the touch screen. It is easy to pull a wire loose if it is stressed.*

3. Remove the four flat-head screws, lift the CRT touch panel away from the CRT, and set it aside.

Touch panel replacement is the reverse of the removal procedure.

## Removing and Replacing the CRT Assembly

1. Remove the CRT bezel (see *Removing and Replacing the CRT Bezel* for more information).
2. Remove the right side cardcage cover (see *Gaining Access to the Right Side Cardcage* for more information).
3. Remove the keypad board assembly (see *Removing and Replacing the Keypad Board Assembly* for more information).
4. Remove the CRT touch panel (see step 4 of the above procedure for more information).
5. Position the instrument on its right side and remove the four screws holding the CRT assembly to the VM700A chassis (see Figure 3-15).
6. Slide the CRT assembly out of the chassis enough to remove the 10-wire connector at the rear.
7. Remove the CRT assembly from the VM700A chassis and set it aside.

CRT assembly replacement is the reverse of the above procedure.

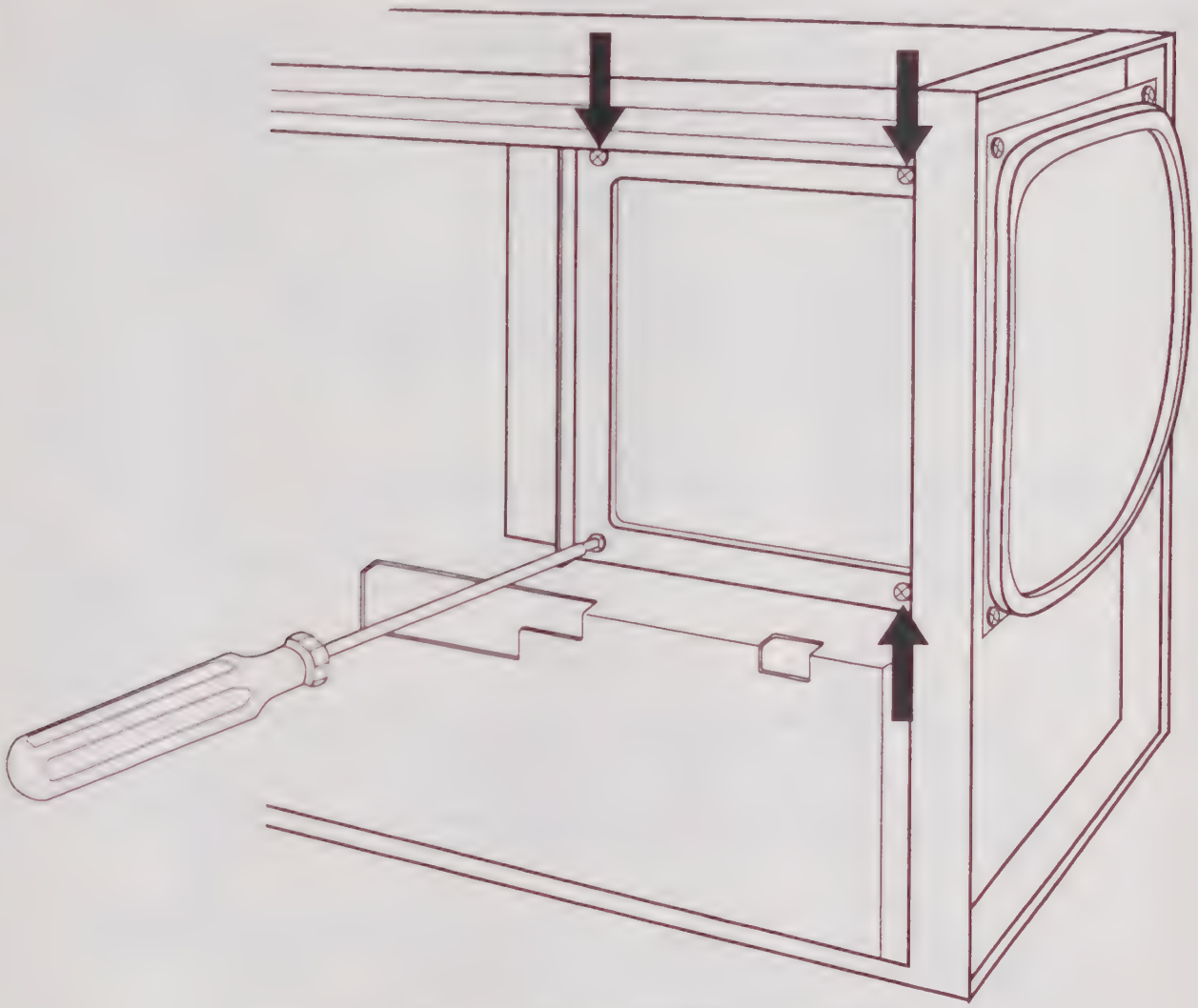

Figure 3-15. Removing the CRT assembly retaining screws.

## REMOVING AND REPLACING POWER, INTERCONNECT, AND COOLING COMPONENTS

This section describes how to remove and replace the power supply, the main interconnect board, and the cooling fan.

### Tools Required

- Flat-blade screwdriver, $\frac{3}{16}$ or $\frac{1}{4}$ inch blade.
- Pozidriv® screwdriver, 2X.
- Combination or open-end wrench, $\frac{11}{32}$ inch
- Small wire cutters.

## Removing and Replacing the Power Supply

The power supply is located on the right side of the VM700A, below the right-side cardcage. You may remove the power supply by first removing the cover panels of the VM700A (see *Removing and Replacing a Cover Panel* for more information) and turning the instrument upside down. The following procedure describes removing and replacing the power supply.

**WARNING**

*This instrument contains hazardous voltages. Before removing covers or performing disassembly/reassembly procedures, always shut off instrument power at the rear-panel switch and disconnect the power cord from electrical mains. Failure to do this could result in dangerous electrical shock.*

**NOTE**

*The power supply is field removable for replacement only; it is not a field-serviceable unit.*

1. Position the VM700A with its bottom facing up and remove the wires and connectors from the power supply.

**NOTE**

*The connections are labeled on the power supply. We suggest that you tag each wire with a label as you remove it, for easy replacement later.*

2. From the bottom of the instrument, remove attaching screws (one screw must be accessed through a slot in the power supply housing). See Figure 3-16 for the location of the bottom power supply attaching screws (there are two more on the rear panel).
3. At the rear panel, remove more screws.
4. Move the power supply to clear the corner rail overhang and, holding the wires aside, carefully lift it straight up and out of the VM700A chassis.

Power supply replacement is the reverse of the removal procedure.

**CAUTION**

*When replacing the power supply, make sure the replacement power supply's line voltage switch is set to the correct line voltage. If the line voltage switch is not set correctly the VM700A and the power supply could be severely damaged.*

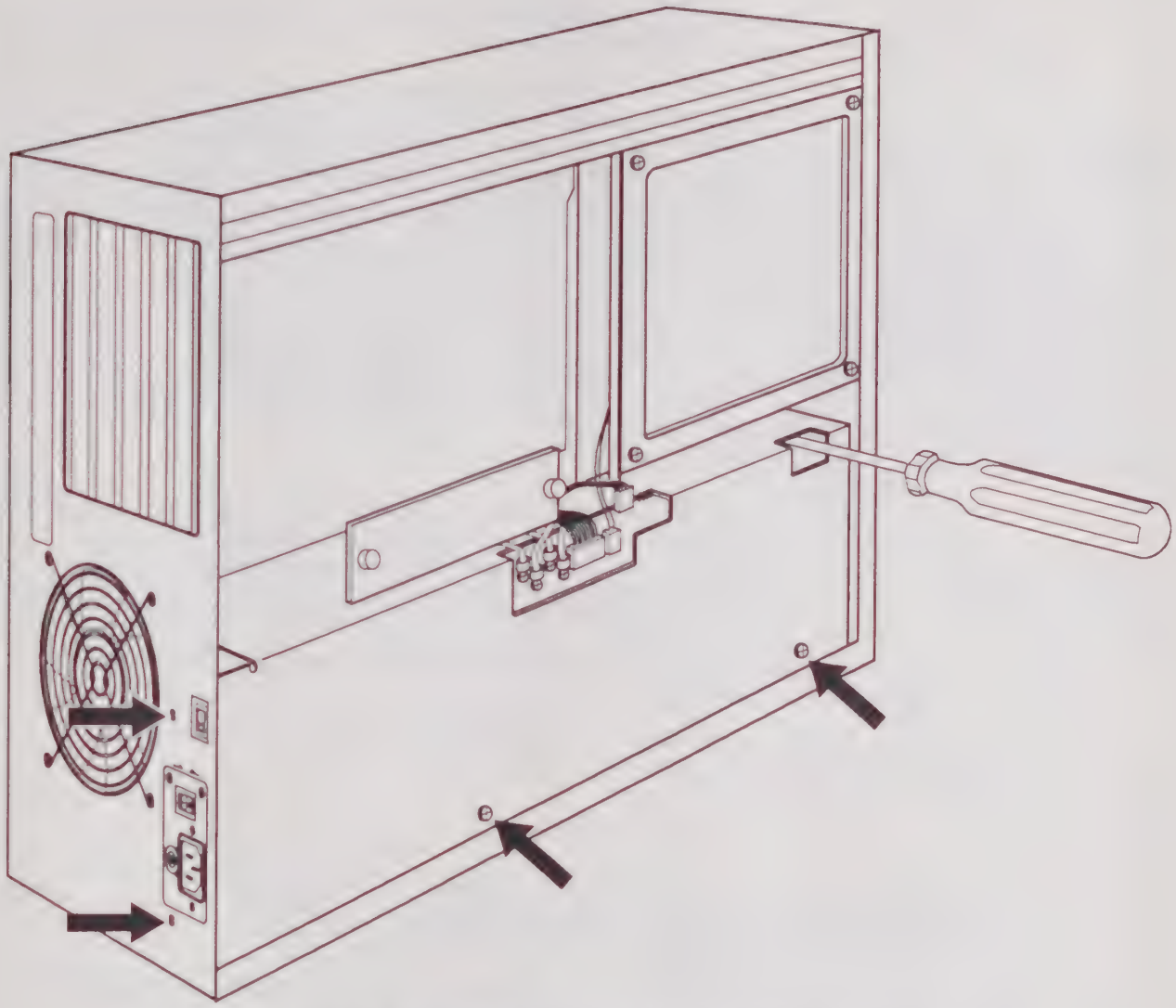

Figure 3-16. Removing the power supply retaining screws.

## Removing and Replacing the Main Interconnect Assembly

The main interconnect assembly consists of three circuit boards assembled with connectors, screws, and spacers. This assembly is replaced as a unit.

All VM700A circuit boards in the two cardcages plug into the main interconnect assembly. Removing and replacing this assembly requires removing the boards from the cardcages, removing wires and attaching screws, and lifting the main interconnect assembly from the instrument. The following procedure describes removing and replacing the main interconnect assembly.

1. Remove the CPU and EPROM/NVRAM boards from the left cardcage (see *Removing and Replacing the CPU and EPROM/NVRAM Boards* for more information.
2. Remove the controller, data acquisition, and display memory boards (see *Removing and Replacing the Controller, Data Acquisition, and Display Memory Boards* for more information.
3. From the top of the instrument, disconnect the power bus cable at its five connectors, remove and set it aside.

4. From the bottom of the instrument, remove the connectors and terminal wires between the power supply and the main interconnect assembly.

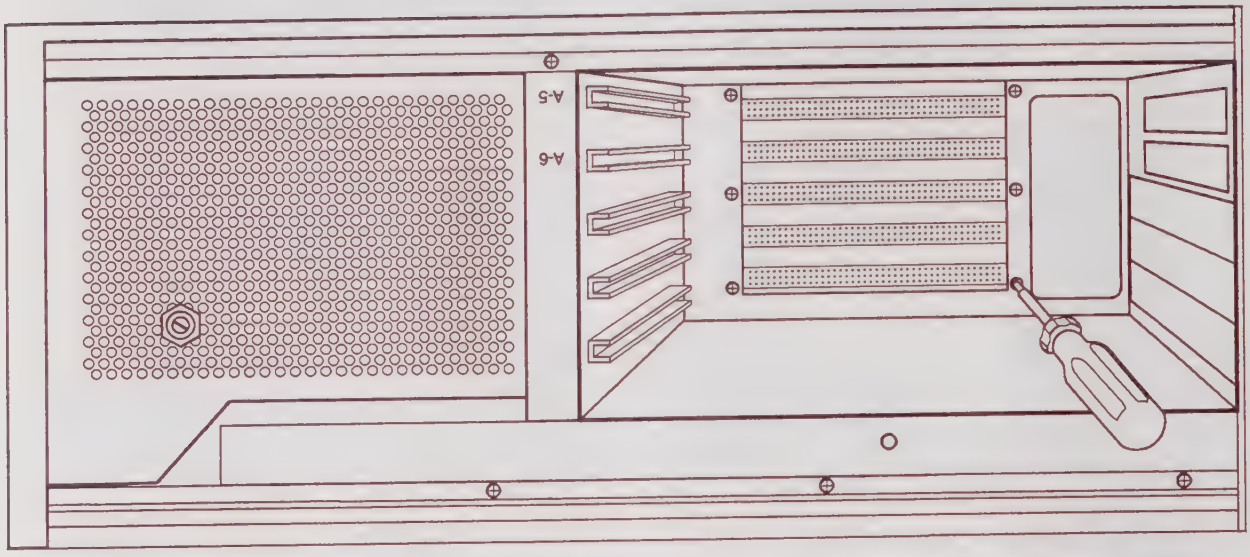


**Figure 3-17. Removing the retaining screws for the main interconnect board assembly from inside the left cardcage**

5. Inside the left cardcage, remove the six screws holding the main interconnect assembly to the cardcage back panel (see Figure 3-17).

**NOTE**

*The main interconnect assembly retaining screws are easier to remove if you first place the instrument on it's right side and then use a long-shank screwdriver (allowing more hand clearance) to remove them.*

6. With the instrument placed upside down, carefully push the power supply wiring aside and move the main interconnect assembly up and out of the chassis.

Main interconnect assembly replacement is the reverse of the above procedure.

## Removing and Replacing the Cooling Fan

Removing and replacing the cooling fan requires removing the top and bottom cover panels (see *Removing and Replacing a Cover Panel* for more information), removing the power supply, and removing the harness retainers that attach the fan's wire harness to the bottom of the left cardcage.

**NOTE**

*On some VM700As, retainer clips are used with the cooling fan mounting screws instead of threaded nuts. On these VM700As it is not necessary to remove the power supply to gain access to the cooling fan.*

With these items removed, the cooling fan and it's guard can be removed by removing the retaining screws and nuts. The following steps describe removing and replacing the cooling fan.

**WARNING**

*This instrument contains hazardous voltages. Before removing instrument covers to perform disassembly/reassembly procedures, always shut off instrument power at the rear-panel switch and disconnect the power cord from electrical mains. Failure to do this may result in dangerous electrical shock.*

1. Turn the instrument upside down and remove the power supply (see *Removing and Replacing the Power Supply* for more information).
2. With cutters, remove the plastic retainers holding the fan wire harness to the bottom of the left cardcage.
3. Remove the screws and nuts holding the cooling fan and separate the fan and its finger guard from the back panel.

**NOTE**

*We suggest that you remove the two screws accessible from the bottom first. Then, turn the instrument right-side up, remove the remaining two screws, and carefully lift the fan clear of the instrument.*

Cooling fan replacement is the reverse of the above procedure.

# VM700A RACK MOUNTING INSTRUCTIONS

## Unpackaging

When unpackaging the VM700A for installation, keep the shipping carton and packaging material. If returning the VM700A for repairs should become necessary, you will then have packaging available that will provide adequate protection from the USPS or UPS.

## Power Requirements

The VM700A will operate with line frequencies from 47 to 63 kHz, over two line voltage ranges. The low voltage range is from 90 Vac to 132 Vac, 115 Vac nominal. The high voltage range is from 180 Vac to 250 Vac, 230 Vac nominal.

**WARNING**

*For your protection and to avoid damage to the instrument, shut the instrument off before removing or replacing any circuit boards, connectors, or jumpers.*

## Changing the line voltage range and fuse

The voltage range selection switch and fuse holder are located on the lower left corner of the VM700A's rear panel.

The VM700A is shipped from the factory set for 115 Vac operation. If this setting must be changed to 230 Vac, simply set the voltage range selection switch to the 230 V position to operate in the high voltage range. The 8 A fast-blow fuse provides the proper protection in the low voltage range and must be replaced with a 4 A fast-blow fuse for operation in the high voltage range. (With the Tektronix-manufactured power supply, identified by a push-button ON/OFF switch on the rear panel, the fuse values are 6 A and 3 A, respectively, rather than 8 A and 4 A.)

## Rack Mounting

***NOTE***

*If you wish to use Password protection for your user-definable configuration, DIP switch settings on the A5 CPU board must be changed. Section 3 of the Operator's Manual, Configuring the VM700A, contains a detailed description of how Password operates.*

The VM700A fits in a standard 19-inch rack and is shipped with the necessary hardware for rack mounting. Spacing between the front rails of the rack must be at least 17–3/4 inches to allow clearance for the rack slides.

Rack slides conveniently mount in any rack that has a front-to-rear rail spacing between 15–1/2 and 28 inches. Six inches of clearance between the VM700A's rear panel and the rear rack panel is required for connector space and to provide adequate air circulation.

The rack slides consist of two assemblies, one for each side of the rack. Each assembly consists of three sections, as shown in Fig. 3-18. The stationary section of each rack slide attaches to the rack rails. The chassis section mounts on the VM700A and is installed at the factory. The chassis section slides into the intermediate section, which in turn slides into the stationary section.

## Mounting the Rack Slides

Locate the proper holes in the rack rails as shown in Fig. 3-19. Notice that the hole spacing varies with the type of rack. When installing the slides in EIA-type racks, make certain that the slides are attached to the 1/2-inch-spaced holes. Install the stationary section of the rack slides as shown in Fig. 3-20. Make sure the stationary sections are horizontally aligned, level and parallel.

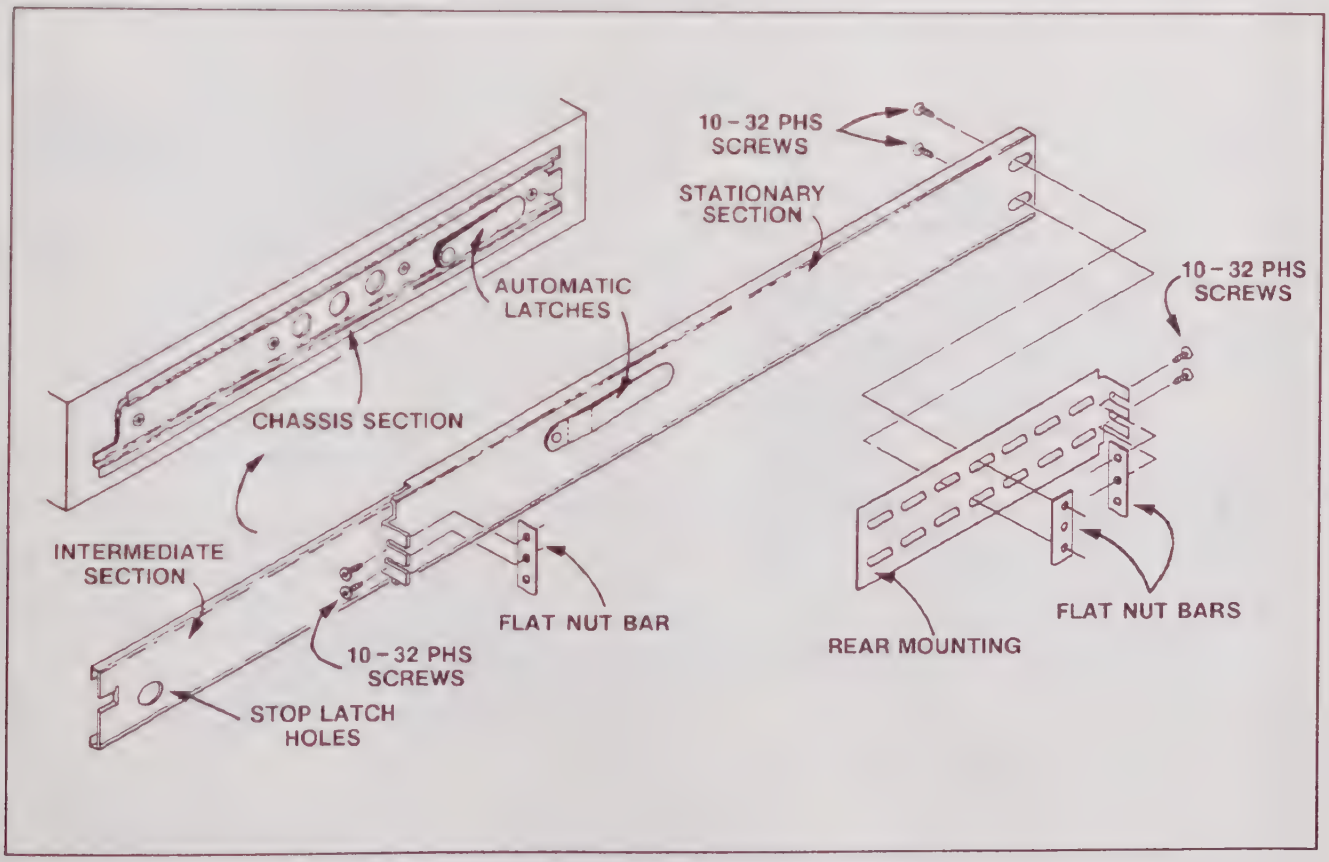


**Figure 3-18. Construction of rack slides.**

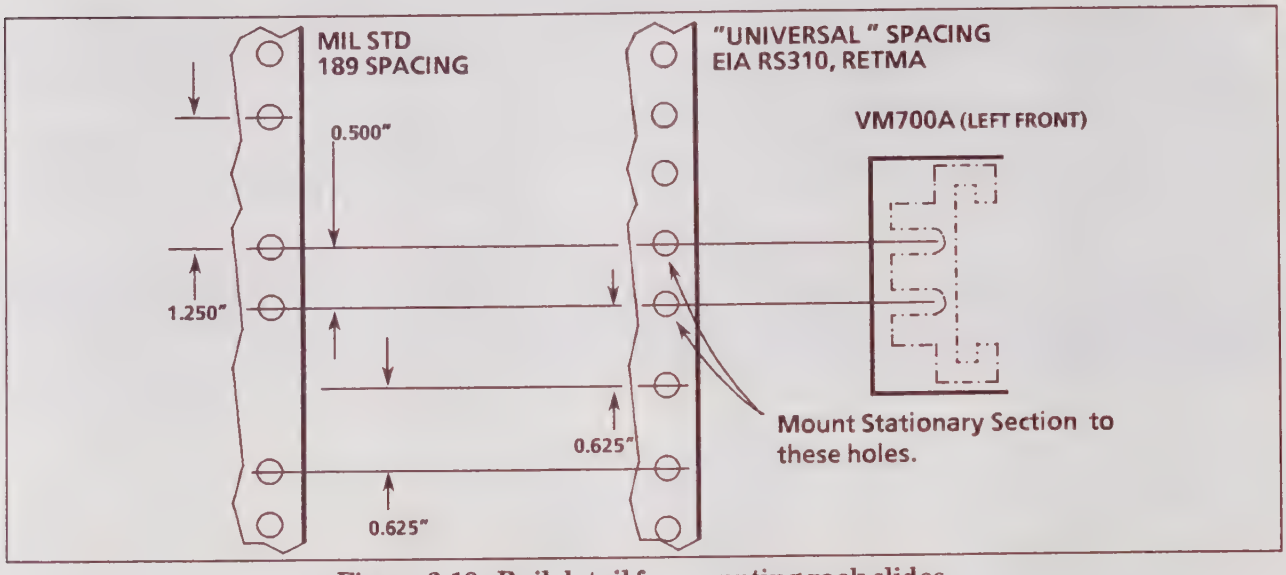


Figure 3-19. Rail detail for mounting rack slides.

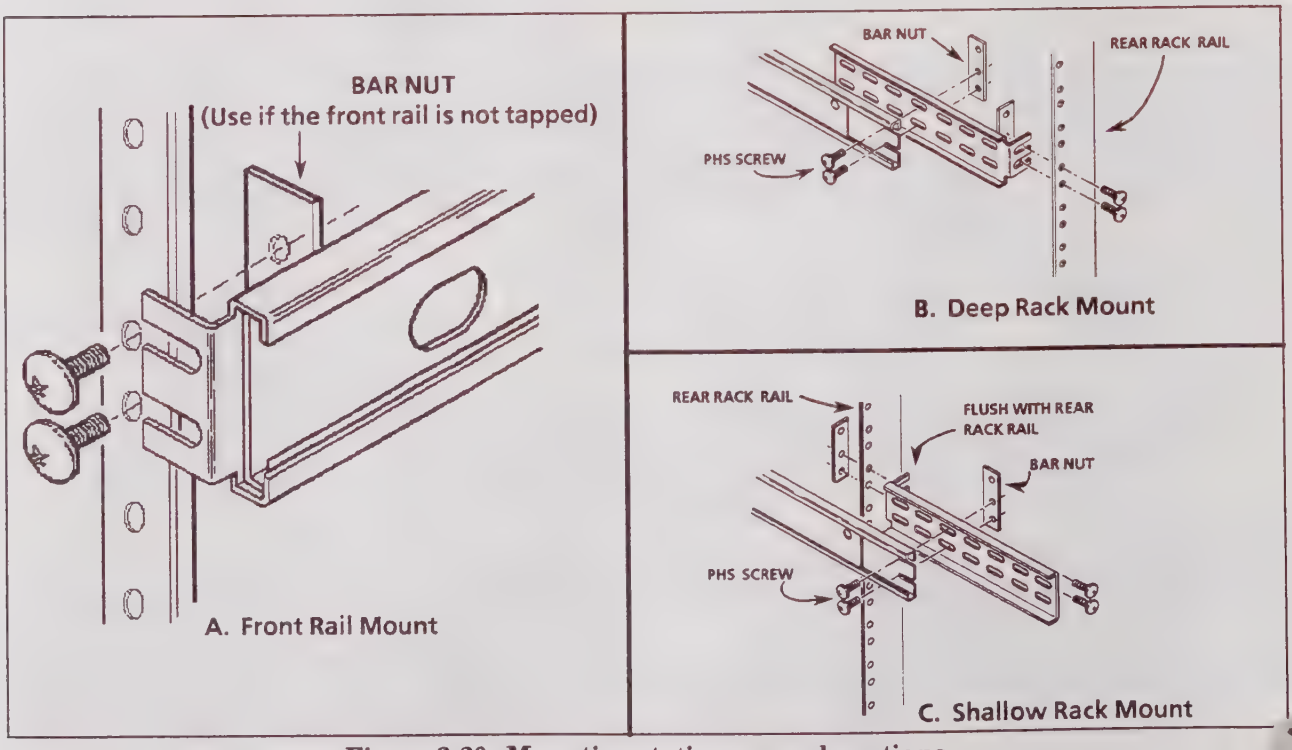


Figure 3-20. Mounting stationary rack sections.

## Installation/Removal from the Rack

Fig. 3-21 shows how to install and remove the instrument from the rack.

## Rack Adjustments

After installation, the rack slides may bind if they are not properly adjusted. To adjust the slides, slide the instrument out about 10 inches, slightly loosen the screws holding the slides to the front rails, and allow them to seek an unbound position.

Retighten the screws and check the tracks for smooth operation by sliding the instrument in and out of the rack several times.

To fasten the instrument securely in the rack, tighten the knurled retaining screw.

## Rack Slide Maintenance

The rack slides do not require lubrication. The dark gray finish on the rack slides is a permanent, lubricated coating.

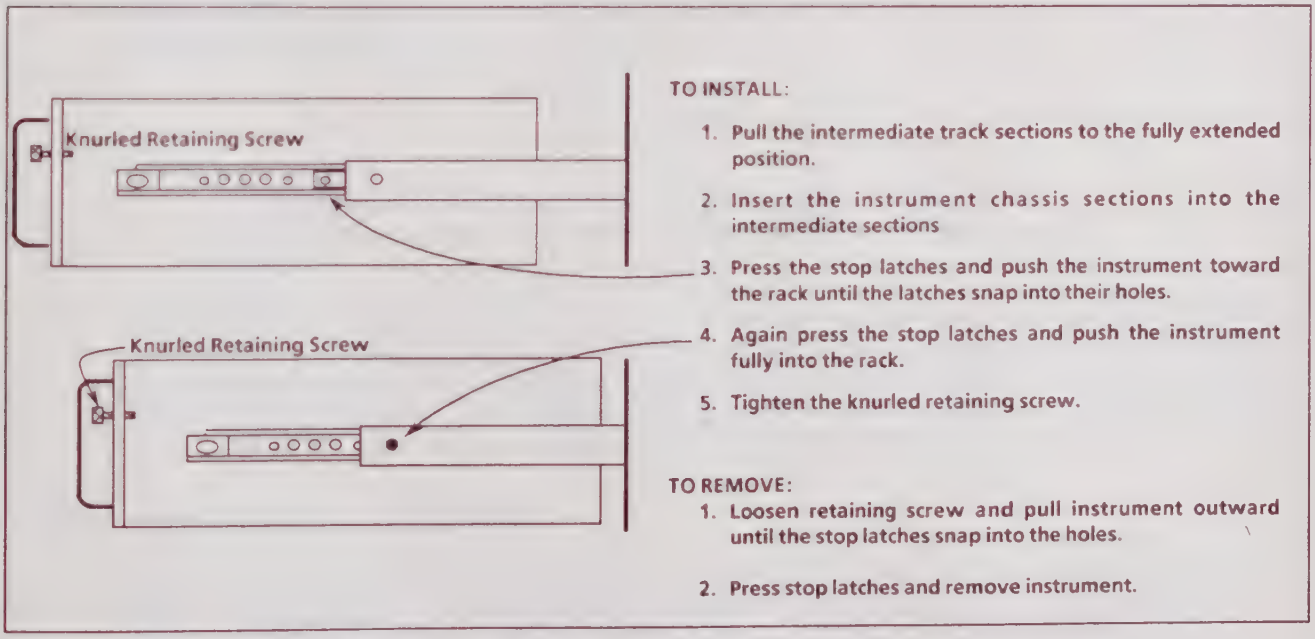


**Figure 3-21. Installing and removing the VM700A from the rack.**

# Section 4
# VERIFICATION AND ADJUSTMENT

## INTRODUCTION

The procedures in this section are of two types: verification and adjustment. The procedures in the first part of this section are done with the covers on the VM700A to verify its operation and may be used to determine the need for readjustment. After a board exchange, certain adjustments may be needed to compensate the overall system performance. Follow the directions found in the adjustment procedures part of this section when readjustment is needed. The instrument's performance to published specifications is verified by other methods during a factory calibration.

## POWER-UP DIAGNOSTICS

Hold down the Auto hardkey when you power up the instrument. After about 5 seconds, release the Auto hardkey. This runs the full set of internal diagnostics. Check that all tests pass as they run. If a test fails, refer to the appropriate text in Section 6 for further actions you can take to determine which board or boards may be at fault.

To check for soft errors (possible intermittent operation), enter the Configure files and set the Diagnostic Selection file to run all diagnostics. If you see a Diagnostic Errors file, either use the Delete softkey to erase it (if it is not needed), or check it for the last error saved and note its time for reference. Select Measure mode by pressing the Measure hardkey, then set the diagnostics to loop continuously (DiagsLoop).

### *NOTE*

*This equipment requires a 20 minute warm-up period before starting the verification procedures. The instrument must be powered on for at least 20 minutes.*

Run the diagnostics while you let the VM700A warm for 20 minutes before starting the verification checks (the diagnostics can be looped as long as desired to more rigorously check for intermittent errors). Use the Abort Diagnostic softkey to halt diagnostic looping. Return to the Configure menu and check the Diagnostic Errors file for new errors. See the Diagnostics information in Section 6 of this manual for more information on the diagnostics tests and their operation.

## TEST EQUIPMENT REQUIRED

The test equipment needed to perform the verification and adjustment procedures is shown in Table 4-1. The specific pieces of equipment required to perform a procedure are shown at the beginning of that procedure. Note that the Gain-Phase analyzer is required for the extended adjustment procedure only.

## Table 4-1
## Test Equipment Required for Verification and Adjustment

| Equipment | Minimum Specification | Purpose | Example |
|---|---|---|---|
| Video amplitude calibration fixture (VAC) with TM500 or TM5000 series power module | Square wave 0.0 mV to 999.9 mV peak; accuracy 0.05%, resolution 0.1 mV | Reference standard for amplitude verification | Tektronix 067-0916-00 |
| Leveled sine-wave generator | 75 Ω output impedance; output flat within ±0.025 dB (≈0.3%) to 6 MHz | Measure sine wave, filter flatness adjustment | Hewlett-Packard 3336C Sine-wave generator with option 005[a] |
| Television signal generator | NTSC, full field and burst capability, accurate to ±1 Hz | NTSC test signal source | Tektronix TSG-170A or equivalent |
| Television signal generator | PAL, full field and burst capability, accurate to ±1 Hz | PAL test signal source | Tektronix TSG-271 or equivalent |
| Frequency counter | External reference capability or ratio A/B, 8-digit display | Adjust the GenLock VCO | Tektronix DC 503A or equivalent |
| Digital multimeter | DC Volts range, 20 mV to 200 V; 3-1/2-digit display | Adjust the GenLock VCO, adjust CalDac | Tektronix DM 502A or equivalent |
| Coaxial cable, 2 required | 75 Ω impedance, high-quality noise free; 1-meter length | Signal interconnections | Tektronix part number 012-0074-00 |
| Termination | 75 Ω precision, BNC connectors | Signal termination | Tektronix part number 011-0102-01 |
| Alignment tool | Non-metallic, flat-blade | Adjust potentiometers and capacitors | Tektronix part number 003-1364-00 |
| Screwdrivers | Pozidriv 1X and 2X | Remove and replace cover panel screws | |
| Gain-phase analyzer | 75 Ω impedance | Extended flatness adjustment | Hewlett-Packard 4194A Impedance/Gain-Phase analyzer |
| Feed-through termination | 75 Ω impedance, BNC connectors | Signal termination | Tektronix part number 011-0055-01 |
| Adapter, 2 required | BNC female to SMB male snap-on connector | Signal interconnections for extended flatness adjustment | Omni/Spectra part number 3280-2224-00[b] |

[a]The flatness accuracy required of the leveled sine-wave generator is only to the bandwidth needed to perform the VM700A verification and adjustments. It is not specified to be that flat over the entire bandwidth of the generator.

[b]Omni/Spectra is a MACOM company: 140 Fourth Avenue, Waltham, MA 02254, USA or 77 Milford Road, Reading, Berks., RG1 8LG, ENGLAND. The example connector is a distributor part.

# SYSTEM VERIFICATION PROCEDURES

## CAUTION

*If the results yielded by the verification procedures in this section are within the limits specified, further calibration and adjustment is not necessary and is not recommended. Adjusting the VM700A unnecessarily (for example, to get a "better" reading on a calibration result that is within limits) can introduce errors into a functional instrument.*

## Procedure 1: Measure Squarewave Procedure

This procedure checks the amplitude accuracy of the instrument. An externally applied precision reference signal is used to check the complete signal path through the instrument.

**Test Equipment Required**

- Video amplitude calibration fixture (VAC). Tektronix 067-0916-00.
- Coaxial cable, 75 Ω high-quality noise free; 1-meter length. Tektronix 012-0074-00.

### Procedure: Measure Squarewave

1. Connect the VAC to channel A of the VM700A (leave the input unterminated).
2. Set the controls of the VAC for NTSC, +LUM, and 700.0 mV.
3. On the VM700A, press the Measure key, the Diags softkey (if not already in Diagnostics mode), and the Measure Squarewave softkey.
4. Check the VM700A for a reading of 700 mV ± 2.1 mV.

## NOTE

*If the voltage measured in step 4 is out of the specified limits, go to Adjustment Procedure 3: Adjusting the Calibration DAC. If the VM700A TV Standard (NTSC or PAL) firmware version is earlier than 2.04, contact Tektronix service support (see* If You Need Customer Services *for further information).*

5. Move the test signal and select the appropriate channel to repeat the check for channel B and channel C.
6. Disconnect the VAC from the VM700A.

## Procedure 2: Measure Sinewave Procedure

This procedure is to be used as a check for proper VM700A system level adjustment. It checks the frequency response flatness over the instrument's operating range.

### Test Equipment Required

- Leveled sine-wave generator, 75 Ω output impedance, output flat within ±0.025 dB (≈0.3%) to 6 MHz. Example: HP 3336C with option 005.
- Termination, 75 Ω precision BNC. Tektronix 011-0102-01, or equivalent.
- Coaxial cable, 75 Ω high-quality noise free; 1-meter length. Tektronix 012-0074-00.

### Procedure: Measure Sinewave

1. Connect the leveled sine-wave generator output to the VM700A channel to be tested (start with channel A). Terminate the channel's loop-through output connection in 75 Ω.
2. Set the leveled sine-wave generator for 50 kHz at an output level of 500 mV into 75 Ω.

**NOTE**

*If the example leveled sine-wave generator is being used, the output level should be set for –3.81 dBm.*

3. Press the Measure hardkey, then, if necessary, display the VM700A Diagnostics directory by pressing the Diags softkey. In diagnostics, run the sine-wave measurement application by pressing the Measure~Sinewave softkey.
4. After the measurement application has initialized, turn Averaging on by pressing the Average hardkey until the Average hardkey light is lit. When the display stabilizes, press the Freeze hardkey. The Delta Amp reading should remain at 0. If the Delta Amp reading changes, press the Freeze key again, as many times as needed, until the Delta Amp reading remains at 0. This is now the reference to which all other measurements are compared.
5. Set the leveled sine-wave generator for a frequency of 4.43 MHz; do not change the output level.
6. To speed up the response to the frequency change, toggle the Average hardkey off, then back on again after the display has re-stabilized.
7. Check that the amplitude is within ± 0.5% (Delta Amp of ± 0.5% or less) of the 50 kHz reference level stored in step 4.
8. Set the leveled sine-wave generator for 5.8 MHz; do not change the output level.
9. Again, to speed up the response to the frequency change, toggle the Average hardkey off, then back on again after the display has re-stabilized.
10. Check that the amplitude is within ± 0.55% of the reference level stored in step 4.
11. Change the TV Standard parameter from PAL to NTSC by pressing the XY Arrow hardkey. Change the filter selection from No Filter to the NTSC bandwidth limiting filter by pressing the Move/Expand hardkey until the filter displays NTSC BW Lim.
12. Return the leveled sine-wave generator to 50 kHz; do not change the output level.
13. To speed up the response to the frequency change, toggle the Average hardkey off, then back on again after the display has re-stabilized.

14. Check that the amplitude is within ± 0.5% of the reference level stored in step 4.
15. Reset the leveled sine-wave generator for 3.6 MHz; do not change the output level.
16. To speed up the response to the frequency change, toggle the Average hardkey off, then back on again after the display has re-stabilized.
17. Check that the amplitude is within ± 0.5% of the reference level stored in step 4.
18. Change the Filter parameter from NTSC BW Lim to Chroma BP by pressing the Move/Expand hardkey. Don't change the settings on the leveled sine-wave generator.
19. To speed up the response to the filter change, toggle the Average hardkey off, then back on again after the display has re-stabilized.
20. Check that the amplitude is within ± 0.5% of the reference level stored in step 4.
21. Change the TV standard parameter to PAL by pressing the XY Arrow hardkey.
22. Change the leveled sine-wave generator frequency to 4.43 MHz; do not change the output level.
23. To speed up the response to the frequency change, toggle the Average hardkey off, then back on again after the display has re-stabilized.
24. Check that the amplitude is within ± 0.5% of the reference level stored in step 4.
25. Repeats steps 1 through 7 for channel B and channel C.
26. Disconnect the test equipment from the VM700A.

### *NOTE*

*If the response on channel A is out of limits, go to Adjustment Procedure 2, Adjusting Filter Flatness.*

*If either channel B or channel C does not pass but channel A does, the Analog input board may need replacement. Check with your nearest Tektronix representative or factory service for assistance and board replacement information.*

## Procedure 3: Measuring the Burst Frequency

This procedure checks the calibration of the internal oscillator using a signal source of known frequency.

### NOTE

*To successfully run this procedure, the VM700A's internal oscillator must be completely stable. Power on the VM700A at least 20 minutes before performing this procedure.*

**Test Equipment Required**

- Television signal generator with full field and burst capability, accurate to ±1 Hz. Tektronix TSG-170A or equivalent.
- Coaxial cable, 75 Ω high-quality noise free; 1-meter length. Tektronix 012-0074-00.
- Termination, 75 Ω precision BNC. Tektronix 011-0102-01 or equivalent.

**Specification Checked**

Burst frequency accurate to ±10 Hz using the internal frequency reference.

### NOTE

*The frequency of the signal generator used must be accurate to ±1 Hz to ensure a valid limit check reference on the burst frequency measurement.*

**Procedure: Measuring the Burst Frequency**

1. Disconnect all signal inputs from the VM700A.
2. Press the Measure hardkey and touch the Video softkey, if necessary, to recall the Video measurement menu.
3. Touch the Burst Frequency softkey. With no signal applied, the VM700A displays a warning message that tells you to check the signal source because a signal cannot be found. The burst frequency measurement starts automatically after 3 seconds (the Loss of Sync indicator blinks).
4. Press the Menu hardkey and touch the Reference softkey in the menu display.
5. Touch the Zero Set softkey to set the measurement reference for the internal oscillator.
6. Connect the signal generator (full field and burst) to the channel A input (terminate the loop through with a 75 Ω BNC termination).
7. Check that the burst frequency measurement is 0 ± 10 Hz using the internal frequency reference.

### NOTE

*If the measurement result obtained is outside of the specification limits, go to Adjustment Procedure 1:* Adjusting the Genlock Board's Voltage-Controlled Oscillator.

# SYSTEM ADJUSTMENT PROCEDURES

After a board replacement, certain adjustments may be needed to compensate the overall system performance. The procedures in this section may be used to make those adjustments.

### *NOTE*

*These procedures are not complete board level adjustments. Most of the factory adjustments are made during testing before the boards are assembled into the VM700A. The adjustments given here are those used to verify and adjust the instrument at the system level.*

## Procedure 1: Adjusting the Genlock Voltage-Controlled Oscillator (VCO)

This procedure verifies the VM700A genlock VCO by comparing it to a frequency standard. If the genlock VCO requires adjusting, this procedure also describes the adjustment process.

### Test Equipment Required

- Signal generator. Tektronix TSG-170A or equivalent for NTSC or Tektronix TSG-271 or equivalent for PAL. Both signal generators are needed for dual-standard instruments.
- Frequency counter with external reference or Ratio A/B. Tektronix DC 503A or equivalent.
- Digital voltmeter with 3-1/2-digit display. Tektronix DM 502A or equivalent.
- Termination, 75 Ω precision BNC. Tektronix 011-0102-01.
- Coaxial cables, 75 Ω high-quality, noise free BNC; 1-meter length, 2 each. Tektronix 012-0074-00.
- Non-metallic, flat-blade adjusting tool. Tektronix 003-1364-00.

### *CAUTION*

*This procedure requires access to a radio-frequency standard signal. If you do not have access to a radio-frequency standard signal, do not attempt to adjust the frequency of the VM700A genlock crystal oscillator.*

### Specification Checked

Genlock VCO: within ±5 Hz of a radio-frequency standard 1 MHz signal when checked with the following procedure. Single standard instruments, either NTSC or PAL, need only one VCO checked. For dual-standard instruments both must be checked.

### Procedure: Verifying the Genlock Voltage-Controlled Oscillator

1. Connect a radio-frequency standard 1 MHz signal to the external reference input of the frequency counter (channel B of the example counter).
2. Connect the subcarrier output of the appropriate video signal generator (NTSC or PAL) to the signal input of the frequency counter (channel A of the example counter).

3. Using the suggested frequency counter, the ratio of the channel A to channel B signal is used to determine when the frequency of the test signal is adjusted correctly. Adjust the signal generator until the frequency counter displays the exact TV standard subcarrier frequency for the VCO being checked (3.579545 MHz for NTSC or 4.43361875 for PAL).

4. Connect the composite video output of the signal generator to the VM700A channel A input (terminate channel A with the 75 Ω termination).

5. With the VM700A powered off, remove the three top cover holding screws (found at the rear of the instrument) and slide the top cover panel back enough to expose the genlock board (just behind the CRT module). Power on the instrument and allow it to warm for 20 minutes if not already warmed up.

6. For dual-standard instruments, select either NTSC or PAL mode, as needed for the VCO being checked. This may be done by pressing the Measure hardkey then the Video~Standard softkey to identify the applied composite video signal source. Then press the Waveform hardkey to return to the Waveform mode. Selecting the TV standard in this manner is temporary, and the configuration returns to match that set in the Video Source file at the next power up. Alternately, you may use the Configure menus to set the Video Source file for the TV standard you have applied to the channel.

7. Connect the DVM plus lead to TP 322 on the Genlock board and the minus lead to chassis ground. Check that the voltage is about 0 V (0 V ± 25 mV). The VM700A must be locked to the external input signal.

### CAUTION

*If the VM700A meets the limits described, skip step 8 and go to step 9. Adjusting the VM700A unnecessarily (for example, to get a "better" reading on a calibration result that is within limits) can introduce errors into a functional instrument.*

8. Adjust the VCO adjusting screw for the TV standard you are checking (either NTSC or PAL) for a DVM reading as close as possible to 0 V (0 V ± 25 mV). The VCOs are located in metal housings on the Genlock board near the back of the Display Monitor (crt) (see Figure 4-1).

### NOTE

*If your instrument is a dual standard instrument, check both VCOs before continuing with step 9.*

9. Disconnect the DVM from the VM700A and reinstall the instrument covers.

10. Disconnect all signal inputs from the VM700A, then wait 5 minutes while the internal temperature of the instrument stabilizes.

11. Press the Measure hardkey and touch the Video softkey, if necessary, to recall the Video measurement menu.

12. Touch the Burst Frequency softkey. With no signal applied, the VM700A displays a warning message that tells you to check the signal source because a signal cannot be found. The burst frequency measurement starts automatically after 3 seconds (the Loss of Sync indicator blinks).

13. Press the Menu hardkey and touch the Reference softkey in the menu display.

14. Touch the Zero Set softkey to set the measurement reference for the internal oscillator.

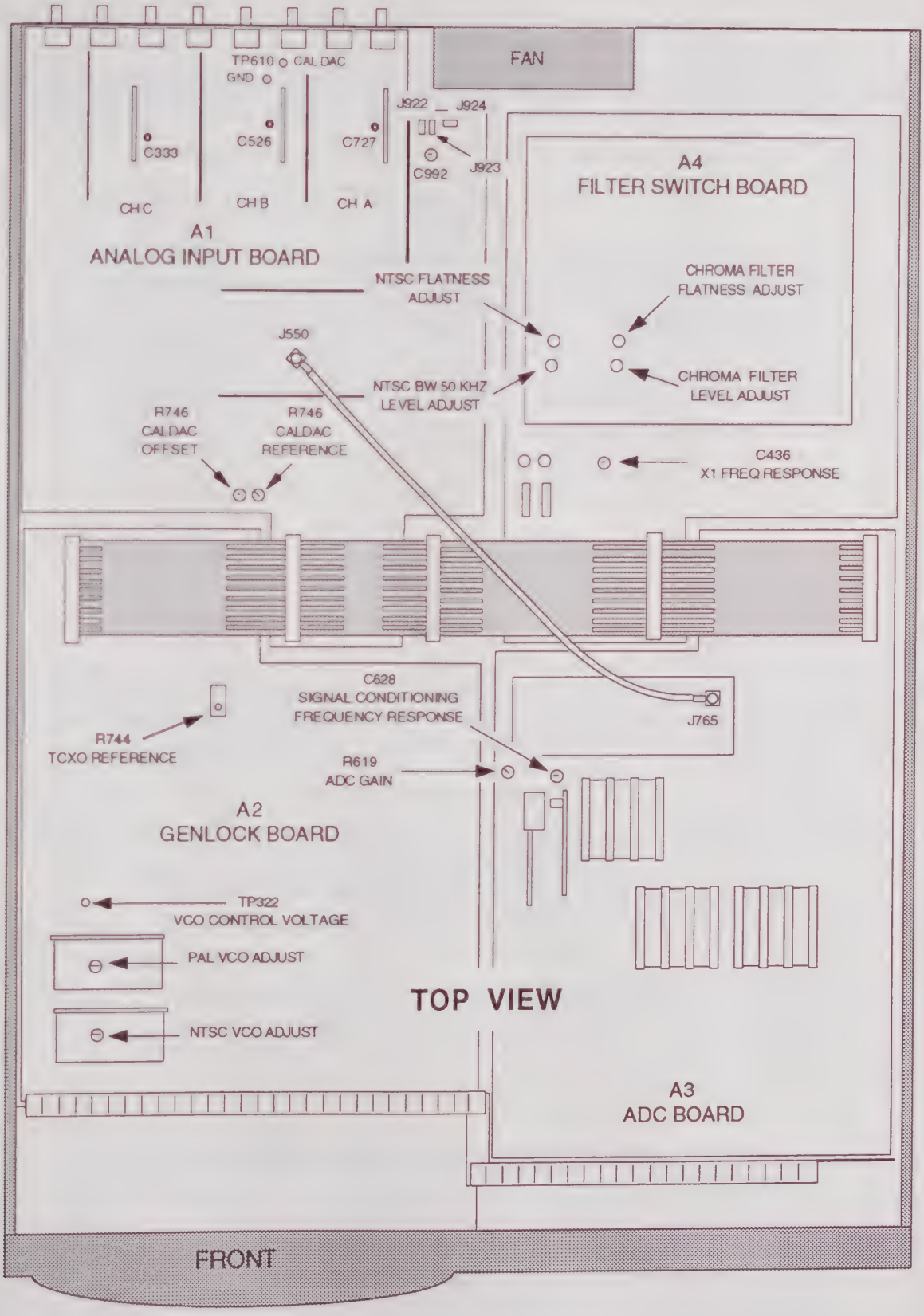


**Figure 4-1. Adjustment locations.**

15. Connect the signal generator (full field and burst) to the channel A input (terminate the loop through with a 75 Ω BNC termination).

16. Check that the burst frequency measurement is 0 ± 10 Hz using the internal frequency reference. Do this procedure for NTSC and PAL TV signals if the VM700A is a dual standard instrument.

### CAUTION

*If the VM700A meets the limits described, skip step 17. Adjusting the VM700A unnecessarily (for example, to get a "better" reading on a calibration result that is within limits) can introduce errors into a functional instrument.*

17. If adjustment is needed, slide the top cover back enough to expose the Genlock board and quickly adjust R744, TCXO REFERENCE, on the Genlock board to set the Burst Frequency measurement to zero. Slide the top cover back on the VM700A. After 5 minutes, check the Burst Frequency measurement again to verify that it remains within tolerance.

### NOTE

*If you performed this procedure after getting out-of-limit results from Verification Procedure 3 (Measuring the Burst Frequency), return to Procedure 3 now.*

## Procedure 2: Adjusting Filter Flatness

This procedure is used to adjust the frequency response flatness over the operating range of the VM700A after a board exchange repair or after it is determined that the flatness is out of tolerance by doing the Measure Sinewave check procedure.

**Test Equipment Required**

- Leveled sine-wave generator, 75 Ω output impedance, output flat within ±0.025 dB (≈0.3%) to 6 MHz. Example: HP 3336C with option 005.
- Termination, 75 Ω precision, Tektronix 011-0102-01, or equivalent.
- Coaxial cable, 75 Ω high-quality noise free; 1-meter length. Tektronix 012-0074-00.

### Procedure: Adjusting Filter Flatness

1. Set the leveled sine-wave generator for 50 kHz at 500 mV into 75 Ω.

### NOTE

*If the example leveled sine-wave generator is being used, the output level is set to –3.81 dBm.*

2. Connect channel A of the VM700A to the leveled sine-wave generator and terminate the channel A loop-through output connection in 75 Ω.

3. Press the Measure hardkey and move to the VM700A Diagnostics directory by pressing the Diags softkey if necessary. In the Diagnostics directory, run the sine-wave measurement application by pressing the Measure~Sinewave softkey.

4. Once the measurement application has initialized, turn Averaging on by pressing the Average hardkey until the Average hardkey light is on. When the display stabilizes, press the Freeze hardkey. The Delta Amp reading should remain at 0. If the Delta Amp reading changes, press the Freeze key again, as many times as needed, until the Delta Amp reading remains at 0. This is now the reference to which all other measurements are compared.
5. Set the leveled sine-wave generator for 4.43 MHz; do not change the output level setting.
6. To speed up the response to the frequency change, toggle the Average hardkey off, then back on again after the display has re-stabilized.
7. Check that the change in amplitude is within ± 0.5% of the 50 kHz reference level stored in step 4. If the amplitude is in tolerance skip to step 8. If it isn't, turn off Averaging (so you can see response changes). Adjust C628 on the ADC board to bring the flatness at 4.43 MHz into specification (approximately ±0.02% or less difference when compared to the 50 kHz reference).
8. Set the leveled sine-wave generator for 5.8 MHz, but do not change the output level setting.
9. If Averaging is on, speed up the response to the frequency change by toggling the "Average" hardkey off, then back on again after the display has re-stabilized.
10. Check that the amplitude is within ± 0.55% of the reference level stored in step 4. If it is in tolerance skip to step 11.

    If the amplitude is out of tolerance, you can try the adjustment of step 7 again to set the amount of change (Delta Amp) to the positive side of the tolerance (i.e. nearer the +0.02% limit) as a compromise. You may also need to start the procedure all over again to re-establish the reference level (it may have drifted slightly from when you first acquired it).

    You should next determine if the problem is only on one channel or on all channels. If only one channel is involved, the Analog Input board may need the flatness adjustments for the input channels done (that procedure is described in the Extended Adjustment Procedure later in this section). If all channels are involved, the ADC board may need adjustment or repair (part of the Analog Input board is also a single-channel signal path, but the ADC board is the most likely problem area when all channels are affected).
11. Change the TV standard parameter from PAL to NTSC by pressing the XY Arrow hardkey. Change the filter selection from No Filter to NTSC Band-Width Limiting Filter by pressing the Move/Expand hardkey until the filter displays NTSC BW Lim.
12. Return the leveled sine-wave generator to 50 kHz; do not change the output level setting.
13. Let the display stabilize.
14. Adjust the NTSC BP filter 50 kHz Level adjust on the Filter Switch board so that the change in amplitude (Delta Amp) is within ± 0.02% of the reference level stored in step 4. See Figure 4-1 for the adjustment locations.
15. Reset the leveled sine-wave generator for 3.6 MHz; do not change the output level setting.
16. Let the display stabilize.
17. Adjust the NTSC BP Filter Flatness adjust on the Filter Switch board so the change in amplitude (Delta Amp) is within ± 0.02% of the reference level stored in step 4.
18. Change the Filter parameter from NTSC BW Lim to Chroma BP by pressing the Move/Expand hardkey. Don't change the settings on the leveled sine-wave generator.
19. Let the display stabilize.
20. Adjust the Chroma Filter Level adjust, so that the change in amplitude (Delta Amp) is within ± 0.02% of the reference level stored in step 5.

21. Change the TV standard parameter to PAL by pressing the XY Arrow hardkey.
22. Change the leveled sine-wave generator frequency to 4.43 MHz, but do not change the output level setting.
23. Let the display stabilize.
24. Adjust the Chroma Filter Flatness adjust, so that the change in amplitude (Delta Amp) is within ± 0.02% of the reference level stored in step 4.
25. Disconnect the cables and test equipment from the VM700A.

## Procedure 3: Adjusting ADC Gain

The ADC gain is auto-calibrated during normal VM700A operation. This check and adjustment should only be done as part of a board exchange repair to set the adjustment to a nominal setting for auto-calibration.

**Test Equipment Required**

- Non-metallic, flat-blade adjusting tool. Tektronix 003-1364-00.

### Procedure: Adjusting ADC Gain

1. Press the Measure key, then the Diags and the ADC Gain Adjust softkeys.
2. The VM700A should display 100% ± 3%.

***CAUTION***

*If the VM700A meets the limits described, skip step 3. Adjusting the VM700A unnecessarily (for example, to get a "better" reading on a calibration result that is within limits) can introduce errors into a functional instrument.*

3. If the number displayed is outside the tolerance range, remove the top cover of the VM700A and carefully adjust R619, ADC Gain, on the ADC board (A3) to bring the number to 100%.

## Procedure 4: Adjusting the Calibration DAC (CalDAC)

This procedure adjusts the calibration DAC. Run this procedure by selecting it with the softkey in the Diags directory. Follow the directions displayed on the VM700A screen for adjusting the Analog Input board (A1) amplitude and offset voltages.

**Test Equipment Required**

- Digital voltmeter with 3-1/2-digit display. Tektronix DM 502A or equivalent.
- Non-metallic, flat-blade adjusting tool. Tektronix 003-1364-00.

***NOTE***

*The CalDAC adjustment procedure is available only on VM700A video measurement sets running firmware version 2.04 and later.*

### CAUTION

*Run this procedure only if Verification Procedure 1 (Measure Squarewave) yields incorrect results. Adjusting the VM700A unnecessarily (for example, to get a "better" reading on a calibration result that is within limits) can introduce errors into a functional instrument*

**Procedure: Adjusting the CalDAC**

1. Press the Measure button and the Diags softkey.
2. Press the CalDAC adjustment softkey.
3. Remove the VM700A top cover and connect the digital voltmeter to TP610 on the analog input board (A1).
4. Adjust R474, CalDac Offset, on the Analog Input board for –1.2793 V.
5. Press the C button.
6. Adjust R476, CalDac Reference, on the Analog Input board for 0.0000 V.
7. Press the C button.
8. Check for a +1.2777 V (±0.001 V) reading at TP610.
9. Press the Measure button to exit the CalDAC procedure.
10. Power off the VM700A and replace the top cover.

### NOTE

*If you performed this procedure after getting out-of-limit results from Verification Procedure 1 (Measure Squarewave), return to Procedure 1 now.*

## Procedure 5: Adjusting the Display

This procedure adjusts the display after a monitor or Display Memory board (A9) replacement. The replacement monitor, when supplied by Tektronix, has been aligned for proper operation in the VM700A, but Trace Rotation (a monitor control) and vertical and horizontal centering (adjustments on the Display Memory board) may be needed to align the replacement display. If the Display Memory board is replaced, usually only the horizontal and vertical centering (step 4) may need readjustment. The final procedure is to set the power-up display intensity and calibrate the touch screen.

**Test Equipment Required**

- Non-metallic, flat-blade adjusting tool. Tektronix 003-1364-00.

**Procedure: Display Monitor Adjustment**

1. Power off the instrument, disconnect its power cord, and remove the left- and right-side covers.
2. Reconnect power to the VM700A, power it on, and let it complete its power on initialization. The waveform graticule is the default display at power on.

3. Look at the lower left corner of the waveform graticule. It should form a 90° right angle. If not, adjust the Trace Rotation control (located on the left side of the monitor chassis) to level the form graticule trace across the screen.
4. Check the display's horizontal and vertical centering. If display positioning is not satisfactory (off center or horizontal folded back), adjust the appropriate control (Hor or Vert Centering, located beneath the side retainer plate on the A9 Display Memory board, right side of the VM700A, see Figure 4-2) to align the display on the crt.
5. If the power-on display intensity is not satisfactory, adjust the brightness level. This adjustment is located on the bottom of the CRT display module.

**NOTE**

*The power-up brightness level seldom needs adjustment in normal operation.*

6. Power off the VM700A. Press and hold the Configure button while powering on the instrument.

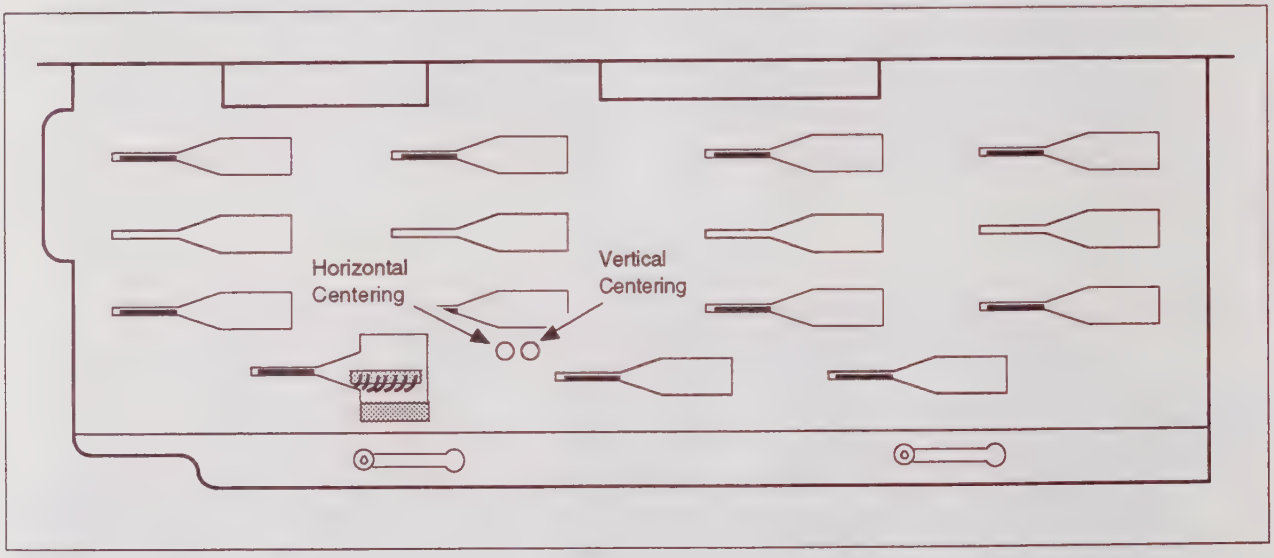


**Figure 4-2. Display monitor centering adjustments.**

7. After about 3 seconds the VM700A displays the touch screen calibration display.
8. Follow the displayed directions to complete the calibration. When the calibration is finished, the VM700A goes through the power up sequence.
9. Power off the VM700A and replace all cabinet covers and retaining screws.
10. Hold the Auto button in and power on the instrument. This runs the full set of diagnostics at power on. Check that the instrument passes all diagnostic tests.

# EXTENDED ADJUSTMENT PROCEDURE

## Procedure 1: Adjusting the Frequency Response

After a board exchange in the analog input section of the instrument, the analog system may need readjustment. This procedure first checks the overall system response. If the verification checks fail, the system may need readjustment. The adjustments provided are to compensate the system frequency response after a board replacement; they are not complete board level adjustments. Use the adjustments only as necessary to return the instrument to specification.

### *NOTE*

*This procedure requires precision test equipment to make the needed measurements for alignment. If you do not have the required test equipment, we recommend that you have the adjustment procedure done at the factory. Contact your nearest Tektronix representative for information.*

### Test Equipment Required

- Gain-phase analyzer, 75 Ω output impedance. Example: Hewlett Packard 4194A Impedance/Gain-phase analyzer.
- Coaxial cable, 75 Ω high-quality, low-noise BNC; 1-meter length, 2 each. Tektronix 012-0074-00.
- Termination, 75 Ω feed-through BNC. Tektronix 011-0055-01.
- Termination, 75 Ω precision BNC. Tektronix 011-0102-01.
- Female-to-female adapter BNC. Tektronix 103-0070-00.
- Adapter, snap-on SMB male to BNC female, 2 each. Example: Omni/Spectra part number 3280-2224-00.
- Non-metallic, flat-blade adjustment tool. Tektronix 003-1364-00.

### Specifications Checked

- Analog board frequency response: flat within 30 mdB to 8 MHz when checked with setup described.
- System frequency response: flat within 30 mdB to 6 MHz when checked with setup described.

### Procedure: Checking the Frequency Response

1. Remove the VM700A top cover to access the adjustments.
2. Set the controls on the gain-phase analyzer as needed. For the example gain-phase analyzer, the controls are set as shown in the gain-phase analyzer setup chart.
3. In the VM700A Diagnostics mode (press Measure, then Diags), run the sine-wave measurement application by pressing the Measure~Sinewave softkey.
4. Disconnect the cable connecting the Analog Input board to the ADC board (J550 to J765) and remove it from the VM700A.

**Gain-Phase Analyzer Setup**

| Control | Setting |
|---|---|
| A-max | 200 mdB |
| A/div | 30 mdB |
| Function | GainPhase |
| Sweep | Log |
| Osc Level | 100 mVolts |
| Start Freq | 100 kHz |
| Stop Freq | 20 MHz |
| Marker | 8 MHz |
| Output | Dual |
| Input Ref | 75 Ω, 0 dB |
| Input Test | 1 Meg, 20 dB |

5. Connect an SMB-to-BNC adapter to a 75-Ω BNC cable, attach a 75-Ω feed-through termination, and connect it to the test channel input connector of the gain-phase analyzer.
6. Connect a second SMB-to-BNC adapter to a 75-Ω BNC cable and connect the BNC end of the second cable to the dual output connector of the gain-phase analyzer.
7. Connect the two cable adapters on the ends of the BNC cables together using the cable removed from between the Analog Input and ADC boards. Normalize the cables and the gain-phase analyzer to remove the cable effects from the measurement (see the gain-phase analyzer operator's manual for the procedure to normalize the cables).
8. Disconnect the SMB cable and the SMB-to-BNC adapter from the BNC cable going to the output of the gain-phase analyzer and connect that cable to the VM700A channel A input (terminate channel A with a 75-Ω termination).
9. Connect the input of the gain-phase analyzer to J550 on the Analog Input board via the SMB cable, SMB-to-BNC adapter, and BNC cable just normalized.
10. Bypass the Filter Switch board by removing the cables from J922 and J923 on the Analog Input board and connecting the jumper (removed from J924) between J922 pin 2 and J923 pin 2.
11. Check that the frequency response for channel A is flat within 30 mdB peak-to-peak (one major division on the example test equipment display) to 8 MHz.

***NOTE***

*This bandwidth may reduce to 7 MHz with no penalty in the accuracy of the automatic measurements. The 8 MHz bandwidth is a factory calibration requirement to reduce the long-term aging effects of new components on flatness.*

12. Check the frequency response for channels B and C.

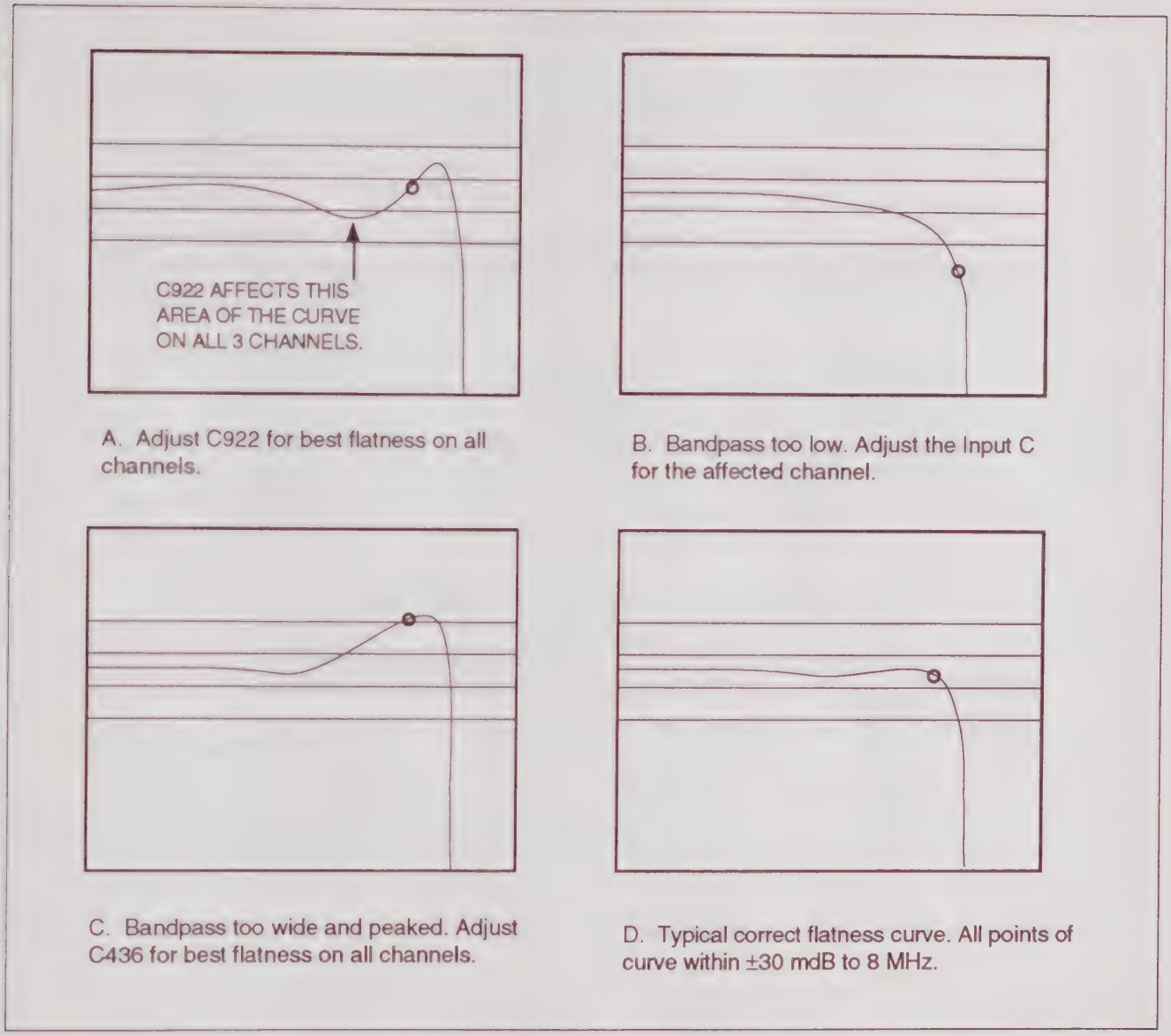


**Figure 4-3. Example gain-phase analyzer flatness waveforms for the VM700A.**

### *CAUTION*

*If the VM700A meets the limits described in steps 11 and 12, skip steps 13 and 14 and go to step 15. Adjusting the VM700A unnecessarily (for example, to get a "better" reading on a calibration result that is within limits) can introduce errors into a functional instrument.*

13. If the channel A frequency response is outside the limits specified in step 11, adjust C727 (you can also adjust C922 if necessary) to bring it into specification (see Figure 4-3).

### CAUTION

*Adjusting C922 affects all three channels equally. If you need to adjust C922, you will have to re-check that all channels meet the flatness specification. Some adjustments may have been slightly compromised in the factory calibration so that all the channels fall within specification. If an adjustment is done to optimize one channel, it may push one or both of the others out of limits.*

14. If the channel B and channel C frequency responses are outside the limits specified in step 11, adjust C526 for channel B and C333 for channel C (be sure to connect the cable and termination to the appropriate input channel connectors and select that channel as the signal source).

15. Reinstall cables and jumpers removed in step 10 to their original positions, but leave the SMB cable between the Analog Input and ADC boards disconnected.

16. Set the marker on the gain-phase analyzer to 6 MHz and check that the frequency response is flat within 30 mdB peak-to-peak.

### NOTE

*If the VM700A meets the limits described in step 16, skip step 17.*

17. If the frequency response is outside the limits specified in step 16, adjust C436 on the filter switch board to bring it into specification. Re-verify that all channels meet specification after adjusting C436.

18. Power off the VM700A. Disconnect the test cables and reconnect the SMB cable between Analog Input and the ADC board (J550 to J765).

19. Re-install the instrument covers. Hold the Auto button in and power on the instrument. This runs the full set of diagnostics at power on. Check that the instrument passes all diagnostic tests.

# Section 5
# THEORY OF OPERATION

## INTRODUCTION

This section describes the operation of the VM700A. The section first describes the VM700A system, then details each circuit board at the block level. Block diagram illustrations accompany the appropriate text.

## OVERVIEW OF THE VM700A SYSTEM

The video signal enters the VM700A's analog input board (A1) via one of three high-impedance loop-through connectors. After it buffers and clamps the input signal and selects a channel, the A1 board passes the signal to the A4 filter switch board where analog filtering (signal conditioning) occurs. After filtering the filter switch board returns the video signal to the A1 board for analog processing (offset, gain, and dither are dynamically applied). The signal then passes to the analog-to-digital (ADC) converter board (A3) where it is digitized.

The A2 genlock board uses an external sync or the sync from one of the three video input channels to create a sampling pulse synchronized (genlocked) to the incoming sync pulses. A two-stage, 10-bit, analog-to-digital flash converter digitizes the video signal. After digital conversion, the differential ECL data is clocked to the controller board (A8) where it is converted to single-ended TTL. The TTL data is passed to acquisition memory (on the acquisition memory board, A7).

Besides converting ECL data to single-ended TTL, the controller board also handles the following analog processing hardware functions: clamping, input selection, sync source, filter selection, offset, gain, dither, and genlock.

The data acquisition board (A7) stores acquired data and with the controller board controls data acquisition patterns. The memory on the data acquisition board (acquisition memory) consists of static RAM accessible by the CPU during data acquisition (the memory appears to be dual ported).

The CPU board (A5) contains a 68020 microprocessor, 68881 floating-point unit, real-time clock, and two RS-232C ports.

The EPROM/NVRAM board (A6) stores application programs. This board also stores system and configuration files created by the user.

The display memory board (A9) converts acquired data to video and drives the VM700A display. This board contains a 68008 microprocessor that controls the touch-panel, control knob, and keyboard interfaces to the 68020.

## ANALOG INPUT BOARD (A1)

The analog input board performs input selection and applies bias, clamping, offset, gain, and dither to the input video before digital conversion. This board also contains a calibration DAC (digital-to-analog converter) that is automatically switched into the signal path to ensure accuracy.

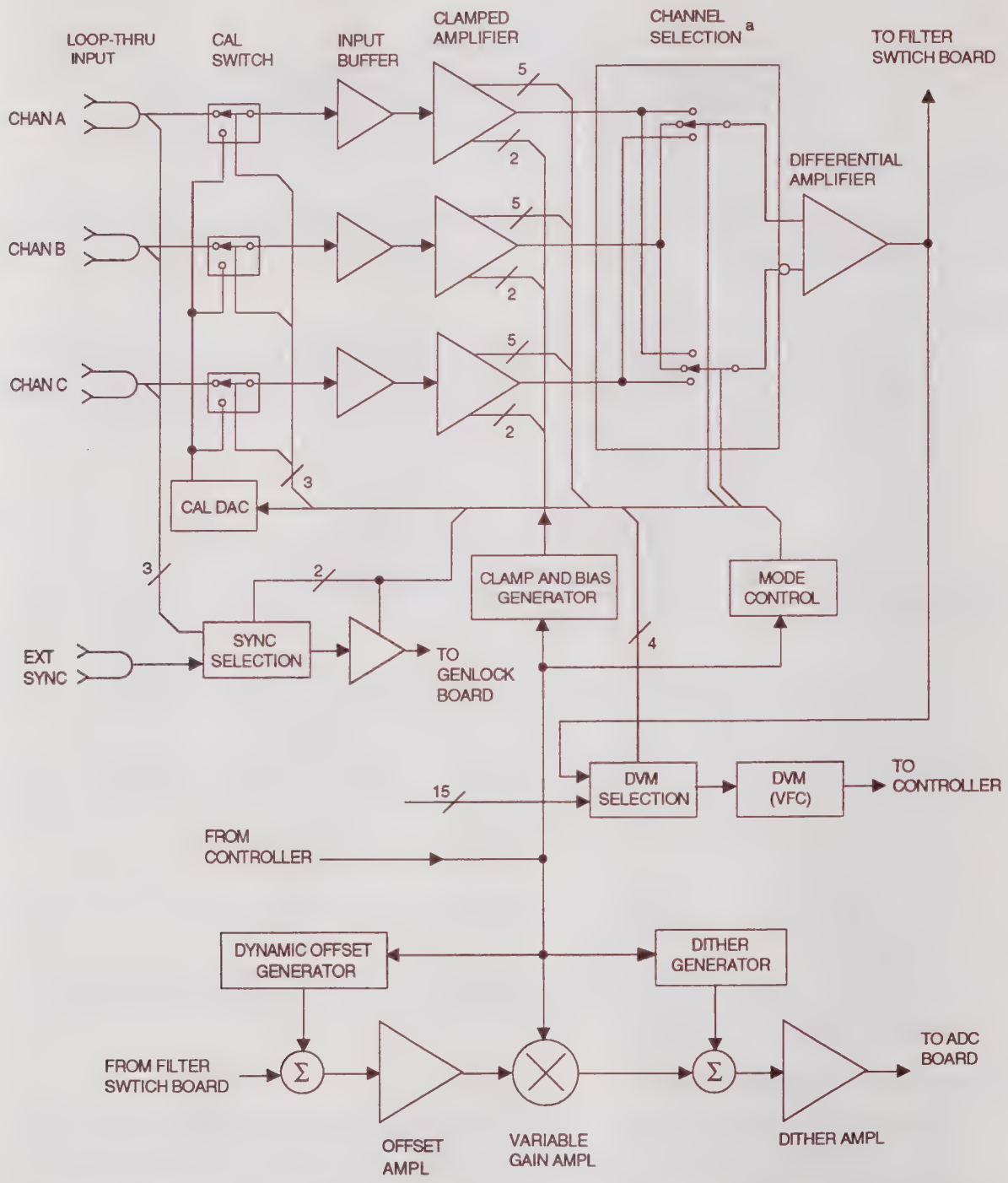


[a] Possible channel selection combinations in hardware are: A, B, C, A – B, A – C, B – C, –A, and –B

[a] Possible front panel selections (using hardware and software) are: A, B, C, A – B, A – C, B – C, B – A, C – A, and C – B.

**Figure 5-1. Analog input board (A1) block diagram.**

## Loop-Through Inputs and Input Buffers

The video channels and the external sync input have independent high-impedance loop-through inputs. Video channels are buffered to maintain high input impedance.

## Mode Control

From the controller board the mode control block passes or decodes instructions for controlling clamped amplifiers, sync selection, channel selection, calibration DAC/cal switch operation, and the DVM selection.

## Clamped Amplifiers

The clamped amplifiers (there are three, one for each channel) can either DC couple or DC restore (clamp) the video signal. Clamping is applied before channel selection to allow independent clamping of video signals that are synchronous but mis-timed relative to each other. The bias level for each channel is summed with the buffered video just before clamping.

## Clamp and Bias Generator

The clamp and bias generator supplies the analog clamp and bias voltages to each clamped amplifier. This device is an 8-bit octal DAC, but only six outputs are used.

The DAC receives its data and address information from the controller board. The 3 address bits enable the appropriate DAC output (clamp or bias for channels A, B, or C) while the 8 data bits are converted to the actual clamp or bias voltage.

## Channel Selection

Output from the clamped amplifiers is fed to a switching matrix that enables the user to select various combinations of input channels.

## Differential Amplifier

The differential amplifier combines the differential output of the switching matrix and produces a single-ended video output signal which is passed, via coaxial cable, to the filter switch board. After being filtered (if filtering is needed) the video signal returns to the analog input board for offset, gain, and dither processing.

On the analog input board an acquisition description supplied by the application (mode) dynamically applies dynamic offset, programmable variable gain, and dither to the input video.

## Dynamic Offset Generator and Offset Amplifier

Eight data bits from the controller board drive the dynamic offset generator DAC and provide a dynamic offset range of -1.28 to +1.27 volts in 10-MV steps. This offset is summed with the video signal to keep the signal centered in the dynamic range of the analog-to-digital converter (ADC). The video signal with offset applied is buffered by the offset amplifier and passed to the variable gain amplifier.

## Variable Gain Amplifier

The variable gain amplifier is a multiplying DAC programmed to yield 0 - 7.75 X gain (in $^{1}/_{4}$ X steps) to the video signal. This improves measurement accuracy by using the optimal dynamic range of the ADC.

## Dither Generator and Dither Amplifier

Six bits of dither data from the controller board can be converted to 64 analog levels (usually, only the first 32 levels are used) to effectively increase the resolution of the 10-bit ADC. This is the same as an 8-LSB range in $^{1}/_{8}$-LSB steps. The typical dither pattern is shown in Figure 5-9).

The dither amplifier buffers the processed video signal before passing it to the ADC board where it is digitized.

## Calibration DAC

The calibration DAC is a precision digital-to-analog converter used for gain compensation over the analog signal path (including the analog-to-digital converter). A calibration switch on each input channel couples the calibration signal onto the signal path at regular intervals. The output of the ADC provides calibration information that is stored in a look-up table. The VM700A uses the look-up table information to maintain its luminance accuracy specification without the need for periodic readjustments.

## Sync Selection

The VM700A gets sync from one of two sources:

- Directly from the channel A, B, or C loop-through inputs
- From the external sync loop-through input

To maintain a high impedance level for the video loop-through inputs, the sync selection buffers the selected signal. Following the sync selection is an amplifier that returns the video to the nominal one-volt level required by the sync stripper circuitry on the genlock board.

The sync stripper needs a negative-going (inverted) sync pulse. To enable the instrument to lock to inverted video, the amplifier following the sync selection can be programmed to invert the (inverted) video selected as the sync source (push down the front panel SOURCE A/B/C button for about one second to invert the video).

***NOTE***

*Video appears on the display in whatever orientation (inverted or non-inverted) it appears at the input connector. When you push the SOURCE A/B/C button only the video used as the sync source is inverted.*

## DVM Selection and DVM

The DVM measures the average picture level (APL). Because deriving APL from the digitized video signal would mean acquiring a large quantity of data, the VM700A measures an analog average where the video exits to the filter switch board. This analog average is converted to a frequency output and sent to the controller board where it is read by a counter. The counter output is read by applications that furnish the APL readout on the display.

Fifteen other inputs to the DVM selection block are selected by two multiplexers. The selections include:

- Outputs of the clamped amplifiers
- Offset Amplifier
- Dither Amplifier
- Calibration DAC

- Video from the filter switch board
- Analog ground
- Clamp levels for channels A, B, and C
- TEMPSENSE from a thermistor
- +REF output from the precision voltage reference (not shown on the block diagram)

## THE GENLOCK BOARD (A2)

The genlock board sends a constant frequency sampling strobe to the analog-to-digital converter board. The genlock board was designed to work with the NTSC, PAL, PAL-M, and PAL-N video standards, but present application firmware supports only the NTSC and PAL standards. The sampling strobe may be generated by one of four methods, or modes (the first three are used by existing firmware applications):

- The strobe may be phase locked to the incoming video signal (synchronous sampling mode), to force 910 (NTSC), 1135 (PAL), 909 (PAL-M), or 917 (PAL-N) samples per line. This is mode 1 operation.
- The strobe may be phase locked to an internal 20.25 MHz temperature-controlled crystal oscillator (TCXO) and divided to NTSC or PAL line rates (asynchronous sampling mode). This method is used when the user wants to have 910/1135/909/917 samples per line, but it is more important to have constant, known intervals between samples than knowing where the samples are taken relative to the video. This method of generating the sampling strobe avoids errors that could be caused by the unstable signals typically found in VCRs. This is mode 2 operation.
- When timing measurement precision is most important the strobe may be exactly 20.25 MHz. This eliminates the small timing errors inherent in phase-locked loop systems. This is mode 3 operation.
- The strobe may be injected by an external generator if greater precision is required than is available from the internal 5 parts-per-million TCXO reference. This is mode 4 operation.

Figure 5-2 shows a block diagram for the genlock board.

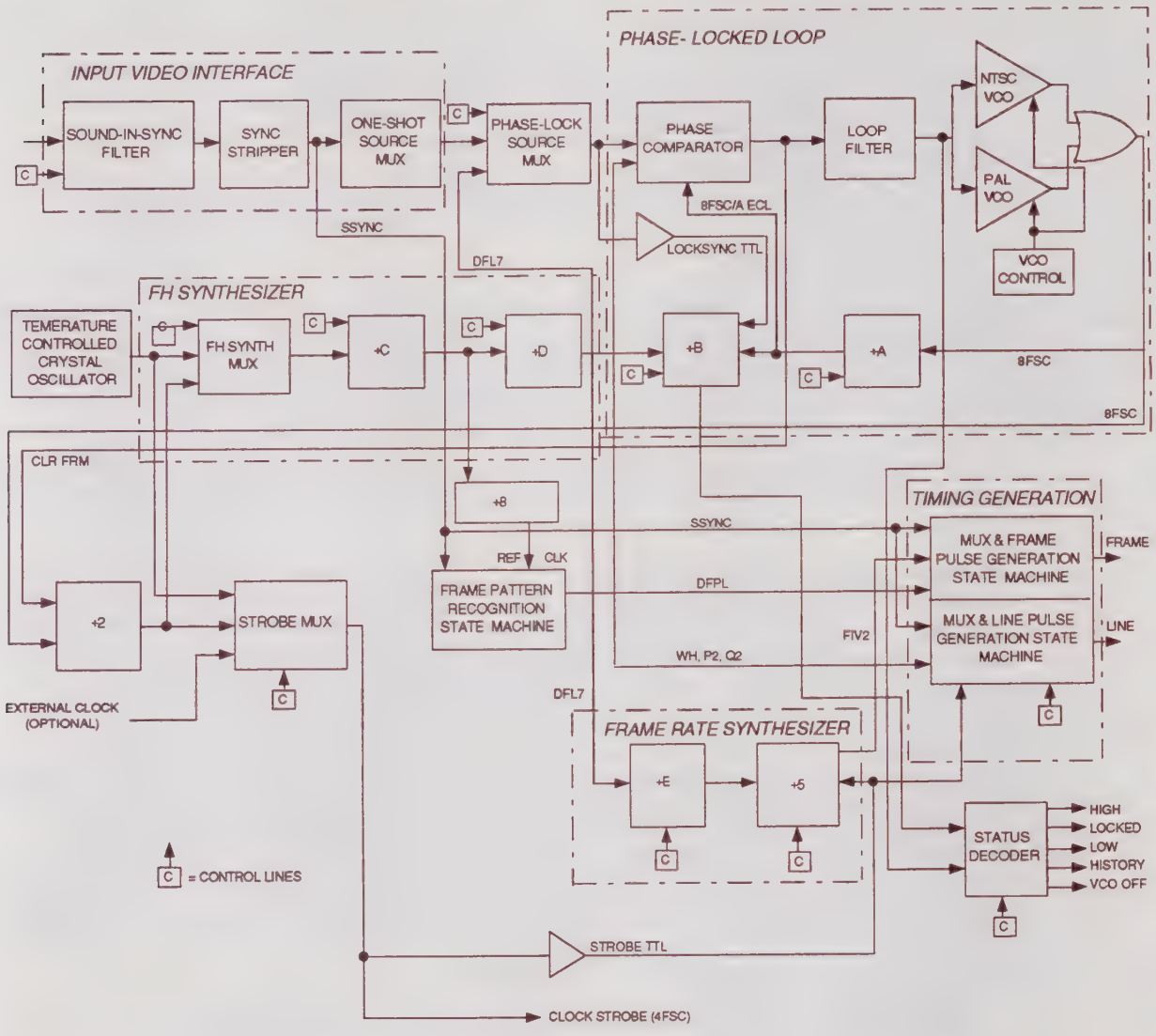


**Figure 5-2. Genlock board (A2) block diagram.**

## Sound-In-Sync Filter

The sound-in-sync filter reduces the level of the audio signal placed on the horizontal sync pulse. In some countries the sync stripper that follows this filter won't operate properly if audio is present on the sync pulse. In the configuration mode a menu selection engages this filter.

## Sync Stripper

The sync stripper removes all chrominance and luminance information from the baseband composite video signal, but leaves the horizontal and vertical sync information.

## One-Shot

The output of the sync stripper is fed through a single-shot multivibrator to isolate the phase-locked loop from signal irregularities. Without this protection echoes from improperly terminated video lines could falsely re-trigger the coarse phase comparator. The output of the one-shot, a horizontal

line-rate signal, is fed to the phase-lock source multiplex as one of the input selections to the phase-locked loop.

## Temperature Compensated Crystal Oscillator (TCXO)

The TCXO provides a 20.25 MHz output that is divided to either an NTSC or PAL line-rate frequency and routed to the phase lock source multiplex as one of the input selections to the phase-locked loop. The VM700A uses this phase-locked loop input selection for asynchronous sampling.

## FH Synthesizer

The first divider in the FH synthesizer, ÷C, is used as a timing reference generator for the frame pattern recognition state machine. The remaining circuitry divides the TCXO frequency and creates a horizontal line-rate signal during asynchronous operation.

### Timing Reference Generator Mode

When used as a timing reference generator in the synchronous sampling mode, the FH synthesizer mux selects the 4FSC (four times the sub-carrier frequency) output from ÷2 as the input to ÷C. ÷C divides by eight (for NTSC, PAL-M, PAL-N) or six (for PAL). This signal is again divided by 8 before reaching the frame pattern recognition state machine.

When used as a timing reference generator in the asynchronous sampling mode, the FH synthesizer mux selects the TCXO output as the input to ÷C. ÷C divides by nine for all video standards. As in the synchronous sampling mode, this signal is again divided by 8 before reaching the frame pattern recognition state machine.

### FH Synthesizer Mode

To create a horizontal line-rate signal for asynchronous operation, ÷C always divides by nine, dropping the signal frequency to 2.25 MHz. The ÷D output divides the 2.25 MHz by 143 (for NTSC and PAL-M), or 144 (for PAL or PAL-N), resulting in 15,734 kHz or 15,625 kHz signals, respectively. The ÷C output is divided by eight and used as a timing reference for the frame pattern recognition state machine.

### FH Synthesizer Multiplex

This mux is an ECL wire-OR gate rather than a conventional hardware multiplexer.

## Phase lock Source Multiplex

The phase lock source mux selects the input to the phase-locked loop. The two inputs to this mux are the horizontal line rate signals from the input video interface and the FH synthesizer. The output of this mux is an input to ÷B, which compares the phase lock source mux output (after it is converted to TTL levels) with its own output. This comparison changes the divide ratio of ÷B when the phase comparator is in coarse correction mode.

## Phase-Locked Loop

### Phase Comparator

The phase comparator operates in either coarse or fine phase correction mode, depending on these two inputs:

- The output of the phase lock source mux (a line-rate pulse)

- The output of the phase-locked loop feedback circuit, ÷B.

The output of ÷B is a window that contains the centered leading edge of the line rate pulse.

The mechanism for coarse phase correction is performed by both the phase comparator and ÷B. When the line-rate pulse is not in the window, ÷B (which is also a gray code up/down counter) changes its divide value. To run the gray code up/down counter, ÷B compares the phase lock source mux output (after it is converted to TTL levels), with its own output. Besides changing the ÷B divide ratio to bring the pulse into the window, the phase comparator also sends a relatively large signal to change the VCO output frequency. When the pulse is again in the window, the fine comparison mechanism takes over and ÷B locks to a static divide ratio.

When the line-rate pulse is not centered, but is still in the window, the fine comparator sends a small compensating voltage. The amplitude and polarity of this voltage depends on the pulse's position from the center of the window. The compensating voltage changes the VCO output frequency until the pulse is again centered in the window. The loop filter's low band-width mode filters the voltage spikes caused by the comparator changing its output level.

### Loop Filter

The loop filter performs variable band-width filtering on the phase comparator's output. When the phase comparator's output is stable the loop filter operates in a narrow-bandwidth mode supplying uniform input to the voltage controlled oscillator (VCO).

However, a large input signal switches the loop filter to a wide-bandwidth mode and allows the VCO output to change rapidly. The rapidly changing VCO output allows the phase-locked loop to quickly re-acquire lock.

### NTSC/PAL VCO (Voltage Controlled Oscillator)

When its input is (nominally) 0 volts (the phase-locked condition) the output of the VCO is a square wave at eight times the sub-carrier frequency. This signal is divided by ÷A and ÷B to obtain a line-rate window for input to the phase comparator. When the phase-locked loop is unlocked, the error-correction voltage sent from the phase comparator and loop filter changes the VCO output frequency to re-acquire phase lock.

### ÷A

÷A divides the 8FSC output of the VCO by five (NTSC or PAL), seven (PAL-N), or nine (PAL-M).

### ÷B (Gray Code Up/down Counter)

The ÷B gray code up/down counter divides the output of ÷A by two, and also divides by 107 (PAL-M), 128 (PAL-N), 182 (NTSC), or 227 (PAL). The output of ÷B is a line-rate window used by the phase comparator.

When the phase comparator is in the coarse comparison mode, the gray code up/down counter increments or decrements as necessary to change the window frequency and acquire phase lock. The gray code count changes the 182/227/107/128 factor by one, which changes the overall 8FSC divide factor up or down by 10 (for NTSC or PAL), 18 (for PAL-M), or 14 (for PAL-N).

## ÷2 Frequency Divider

The ÷2 reduces the 8FSC VCO output to four times the sub-carrier frequency (4FSC) and ensures a 50-percent duty cycle output to the strobe multiplex.

## Strobe Multiplex

The three inputs to the strobe mux are the output from the TCXO, the 4FSC output of the ÷2, and the optional external clock. The input actually selected becomes the strobe that clocks the quantizers on the ADC board. After being converted from ECL to TTL, the output of the strobe mux clocks the frame and line generation state machines and the ÷5.

## ÷8

To use the FH synthesizer as a counter, the output of ÷C is divided again by ÷8. The frame pattern recognition state machine uses this clock signal to reduce the number of states necessary between vertical intervals.

## Frame Pattern Recognition State Machine

The frame pattern recognition state machine uses one of two algorithms (described below) to enable the mux and frame pulse generation state machine. If the frame pattern recognition state machine is disabled the output of the frame-rate synthesizer enables the mux and frame pulse generation state machine.

Odd field recognition, the default algorithm used by the frame pattern recognition state machine, identifies vertical serration pulses and the transitions to equalizer pulses. After it identifies five NTSC or four PAL equalizing pulses (ignoring the first pulse), the frame pattern recognition state machine waits slightly less than half of a line before it opens a window (asserted low) for the mux and frame pulse generation state machine. The first line sync pulse of the odd fields falls within the window and triggers a frame pulse.

All field recognition (or block recognition), the second algorithm used by the frame pattern recognition state machine, also identifies the vertical serration pulses. But instead of identifying the transitions to equalizer pulses this algorithm searches for the first occurrence of a normal 4.7 µs line sync pulse and opens a window approximately one line later (when the next sync pulse is expected). During all fields, line sync falls into the window and triggers the generation of a frame pulse at a field rate (in this case).

## Frame Rate Synthesizer

When the frame pattern recognition state machine is not used the ÷E and ÷5 divide the line-rate output of the FH synthesizer to a frame rate. In this case the output of the frame rate synthesizer enables the mux and frame pulse generation state machine. The ÷E divides by 105 (for NTSC or PAL-M; 5x105=525) or 125 (for PAL or PAL-N; 5x125=625). The frame rate synthesizer is not used by current existing firmware applications.

## Timing Generation

### Mux and Frame Pulse Generation State Machine

The mux and frame pulse generation state machine selects one of the following as its enable input:

1. The frame pattern recognition state machine output (DFPL, in Figure 5-2).

2. The frame rate synthesizer output (FIV2).

When a line sync pulse occurs while the window from either source is asserted, the state machine generates a one-clock-cycle frame pulse at the same time as the next positive-going edge of the clock (4FSC).

#### Mux and Line Pulse Generation State Machine

The mux and line pulse generation state machine operates much like the mux and frame pulse generation state machine, but there is no qualifying window.

### Status Decoder

The status decoder shows the state of the phase-locked loop and whether or not the loop has been unlocked since status was last checked.

When lit, two amber LEDs (separated by a green LED) indicate that the phase-locked loop is unlocked. One LED indicates that the output of the VCO is being pulled high, the other that it's being pulled low. The green LED indicates phase lock. A red LED, when lit, indicates that phase lock has been unlocked since the status of the phase lock was last checked. Checking the phase lock status resets the red LED.

When lit, a third amber LED indicates that neither VCO is operating. This LED indicates mode 3 or mode 4 operation (referencing to a crystal source or to an external strobe signal, respectively) or a malfunction.

Mode 3 and mode 4 operation are described in the first part of the genlock board discussion.

## THE ANALOG-TO-DIGITAL (ADC) BOARD (A3)

The ADC board uses a 10-bit dual flash converter running at four times the sub-carrier rate (the ADC board can run at sampling frequencies from DC to about 35 Ms/s (megasamples per second), but the actual sampling rate is controlled by the genlock board). The input analog signal is quantized into 32 coarse levels by the first 5-bit flash ADC (analog-to-digital converter). This signal is converted to analog, subtracted from the original, and further quantized into 32 finer levels by the second stage of quantization. The outputs of the two quantization stages are combined (after error correction) to assemble the 10-bit data word. The differential ECL data output of the ADC board is first converted to TTL levels on the controller board, then stored in acquisition memory on the data acquisition board.

Line and frame pulses and digitized data from the genlock board are clocked through a series of latches to preserve their timing relationship. Figure 5-3 shows a block diagram of the ADC board.

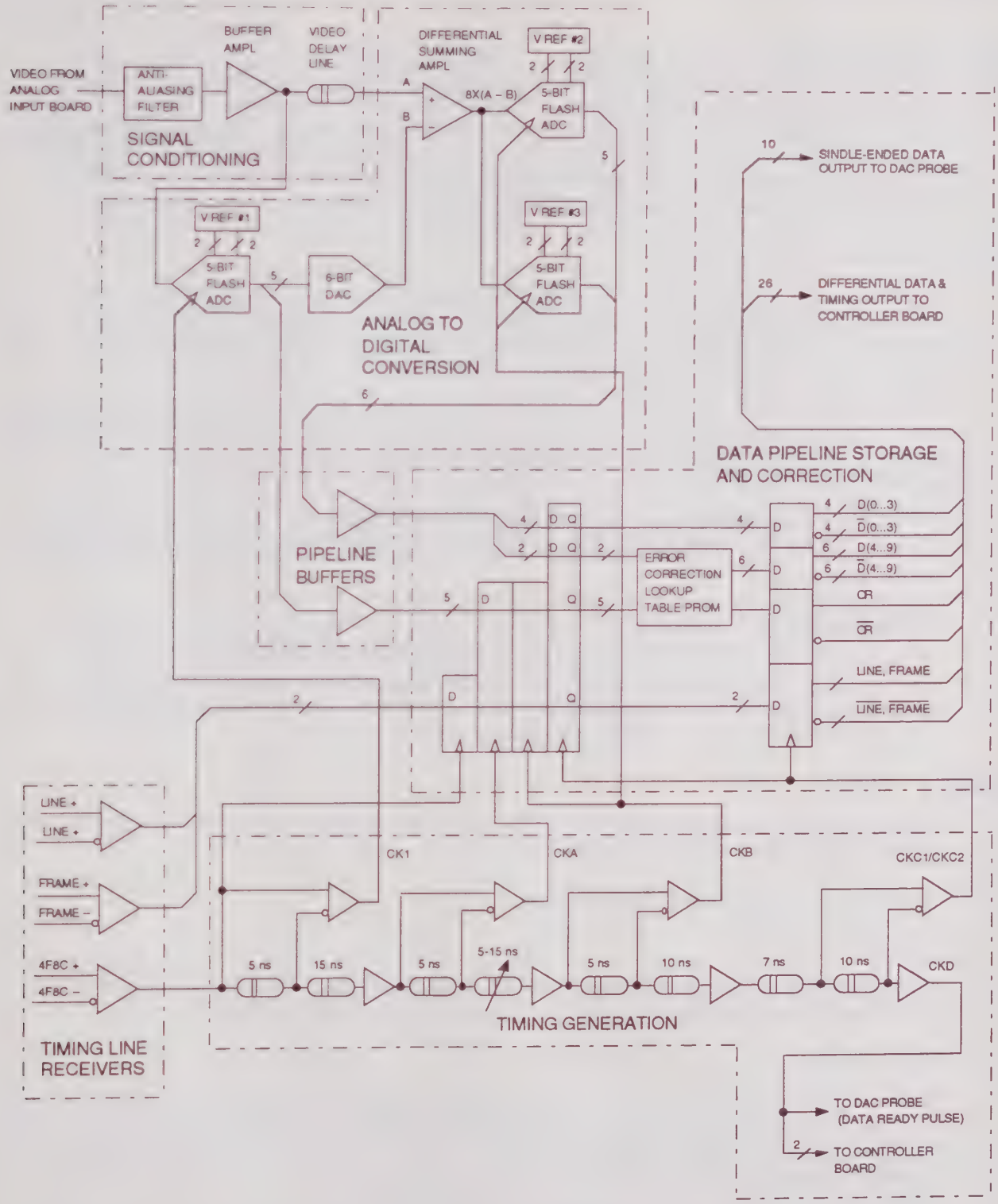


**Figure 5-3. ADC board (A3) block diagram.**

## Signal Conditioning

Incoming video passes through the anti-aliasing filter to remove signal components above the Nyquist frequency (2 times the sub-carrier frequency: 7.16 MHz for NTSC or 8.86 MHz for PAL). The filtered video is then buffered to drive the video delay line and the first equalization stage. The video delay line compensates for the propagation delay experienced by the video passing through the first 5-bit flash ADC and the 6-bit DAC. Both signals arrive simultaneously at the differential summing amplifier, effectively increasing the system's throughput rate.

## Analog-To-Digital Conversion

The 32-level quantization of the first 5-bit ADC input analog signal is supplied to an error-correction look-up table PROM. The PROM uses the quantization to generate the five most-significant bits (MSBs) of the 10-bit digital signal output by the ADC board. This 5-bit word is also applied to the 6-bit DAC to generate a coarse replica of the original analog video signal.

The differential summing amplifier subtracts this coarse replica signal from the delayed input analog signal. The resulting difference signal is multiplied by eight and sent to the second quantization stage consisting of two additional 5-bit flash analog-to-digital converters arranged in a stacked configuration.

The second quantization stage converts the difference signal to a 6-bit word. Four of the 6 bits make up the least significant bits (LSBs) of the output 10-bit word, while the two remaining MSBs are used for error correction.

### Voltage Reference Generators

To make circuit boards interchangeable and to allow more accurate calibration, the ADC board contains its own special-purpose power supplies. These supplies include precision voltage references for the 5-Bit ADCs and the DAC. These power supplies incorporate Kelvin sensing to cancel the effects of contact resistance in the quantizer IC sockets.

## Pipeline Buffers

These buffers provide the necessary isolation for the raw digitized data from the digital circuitry of the data pipeline storage and correction.

## Data Pipeline Storage and Correction

### Storage

Storage refers to the latches that temporarily store the data before it is clocked through to the error correction look-up table PROM by pulses from the timing generation block.

### Error Correction

Inherent analog errors are associated with quantizers (DC offset, drift, dynamic gain, etc.), so to make an accurate digital copy of the analog input the digital output must be error corrected. Since any error in the first 5-Bit ADC is more significant than in the second quantization stage, error correction is provided for the first quantizer.

The two MSBs from the second quantization stage determine if the five bits from the first stage were perfect, or in error by +/- 1 first stage LSB. The error correction look-up table PROM then adds 1 to (or subtracts it from) the output of the first stage (or does nothing if no error was detected). This produces an error-corrected word which makes up the six MSBs of the 10-bit ADC board output. The four LSBs from the second quantization stage are added to this word to produce the final 10-bit output.

### Timing Line Receivers

These buffers provide a single-ended output of the differential LINE, FRAME, and 4FSC signals received from the genlock board.

### Timing Generation

A series of discrete delay lines and buffers provide clean timing signals (derived from 4FSC) to the quantizers and the data pipeline. These timing signals clock the 10-bit data and the LINE and FRAME signals synchronously through the data pipeline.

The output of the timing generation block also includes:

1. Timing signals sent to the controller board to keep track of the digitized data.
2. A data ready pulse (clock pulse) for the DAC probe output (a connector used to factory test the ADC).

## FILTER SWITCH BOARD (A4)

The filter switch board performs analog filtering of the video signal. Filtering is performed by one of four filters mounted as daughter boards on the main circuit board(five filters on newer filter switch boards). The video signal is intercepted on the analog input board just after channel selection and then returned for analog processing (offset, gain, and dither). Figure 5-4 shows the filter switch board block diagram.

On early filter switch boards, the filters include: high pass, low pass, differentiated step, and low-frequency noise. On newer filter switch boards, the filters include: NTSC band width limit, Chroma bandpass, IEEE low pass, differentiated step, and low-frequency noise.

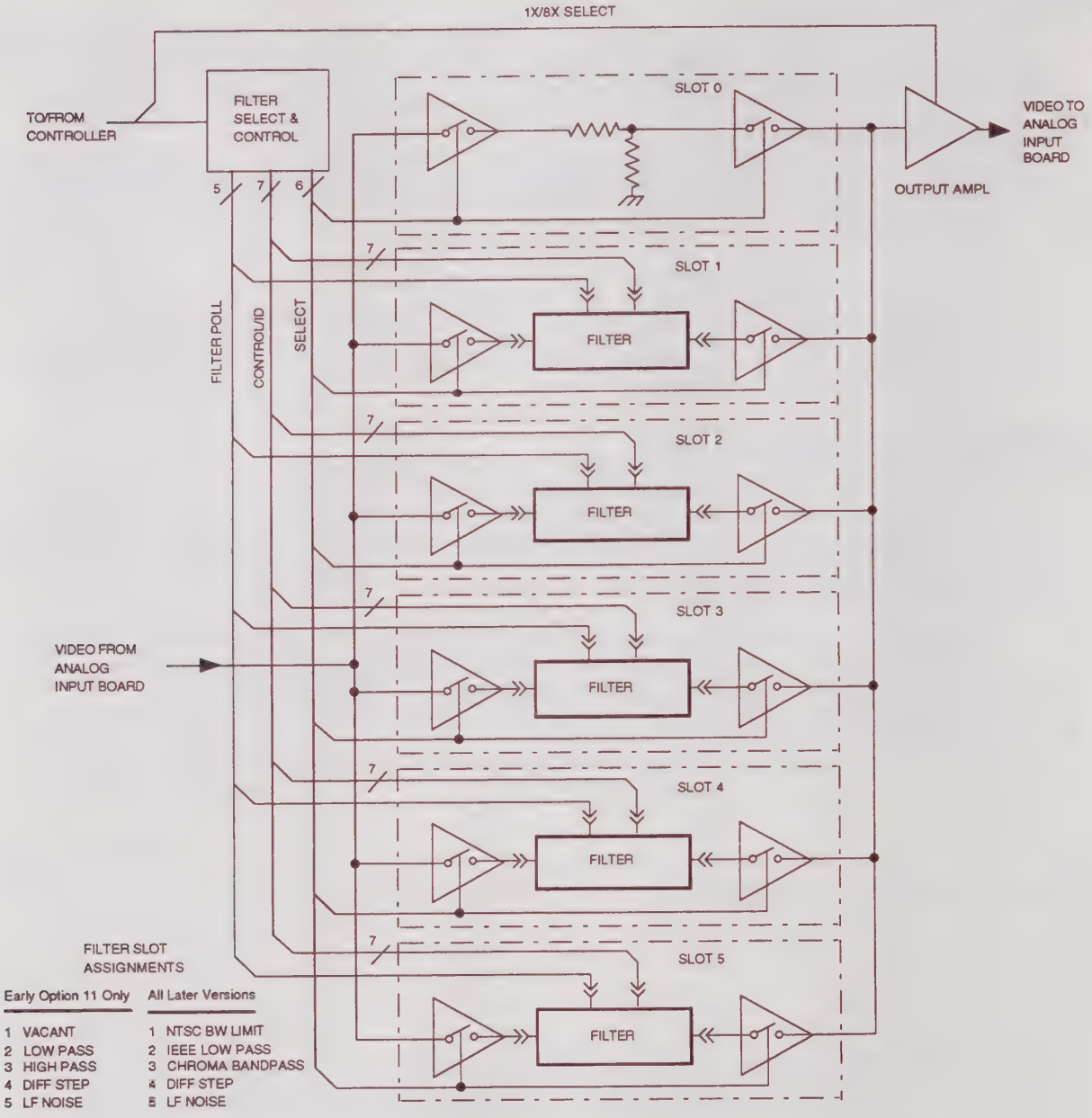


**Figure 5-4. Filter switch board (A4) block diagram.**

## Filter Select and Control

The controller board provides inputs to the filter select and control block. After decoding these inputs select and control the desired filter. Note that only the low-frequency noise filter has controllable characteristics. This block also requests a six-bit filter ID from the filter in each slot and transmits it to the controller board.

The filter select and control block provides three types of outputs:

1. Filter selection, (FSEL[0..5]).
2. Filter poll, a request for filter I.D. (FPOLL[1..5])
3. Filter control, ID/CTRL[0..5]), used only by the low-frequency noise filter.

When FPOLL [1..5] requests a filter I.D. (FPOLL1 requests filter type in slot 1, etc..), the filter places its six-bit I.D. on the ID/CTRL[0..5] lines. The I.D. is relayed to the controller board. FIL3, from the controller board, is not decoded by the filter select and control block, but when asserted, switches the output amplifier from unity gain to eight-times gain.

### Slot 0

Slot 0 is the straight-through path of the filter switch board; it has no connectors for mounting a filter. In place of a filter, a resistor network provides a small amount of signal attenuation. The loss of each filter (in slots 1-5) is adjusted to match the loss from the resistance in slot 0.

When control line FSEL0 is asserted, the switches at both ends of slot 0 close and place slot 0 in the signal path.

### Slots 1-5

Slots 1-5 accommodate the four plug-in filters. Of the eight control lines bused to slots 1-5, one is the FPOLL[1..5] line, and the remaining seven are the ID/CTRL[0..6] lines (see the description above).

Like the resistor network in slot 0, the filters in slots 1-5 are selected by control lines FSEL1 through FSEL5.

The only filter with controllable parameters is the low-frequency noise filter. The -3 dB point on this filter can be set to 1 kHz, 7.5 kHz, 10 kHz, or 15 kHz by ID/CTRL5 and ID/CTRL6.

### Output Amplifier

The output amplifier provides the 75 Ω drive needed for the input to the analog input board. When the controller board asserts FIL3 the output amplifier switches to eight-times gain.

## CPU BOARD (A5)

The central processing unit on the CPU board is a Motorola 68020 microprocessor running at 16.67 MHz. A Motorola 68881 floating point unit (FPU) processes floating-point instructions. The microprocessor and the FPU sit on a CPU bus that includes the 32 data lines, 32 address lines, and control lines from the 68020. All other buses on the CPU board are 8 bits wide. Figure 5-5 shows a block diagram of the filter switch board.

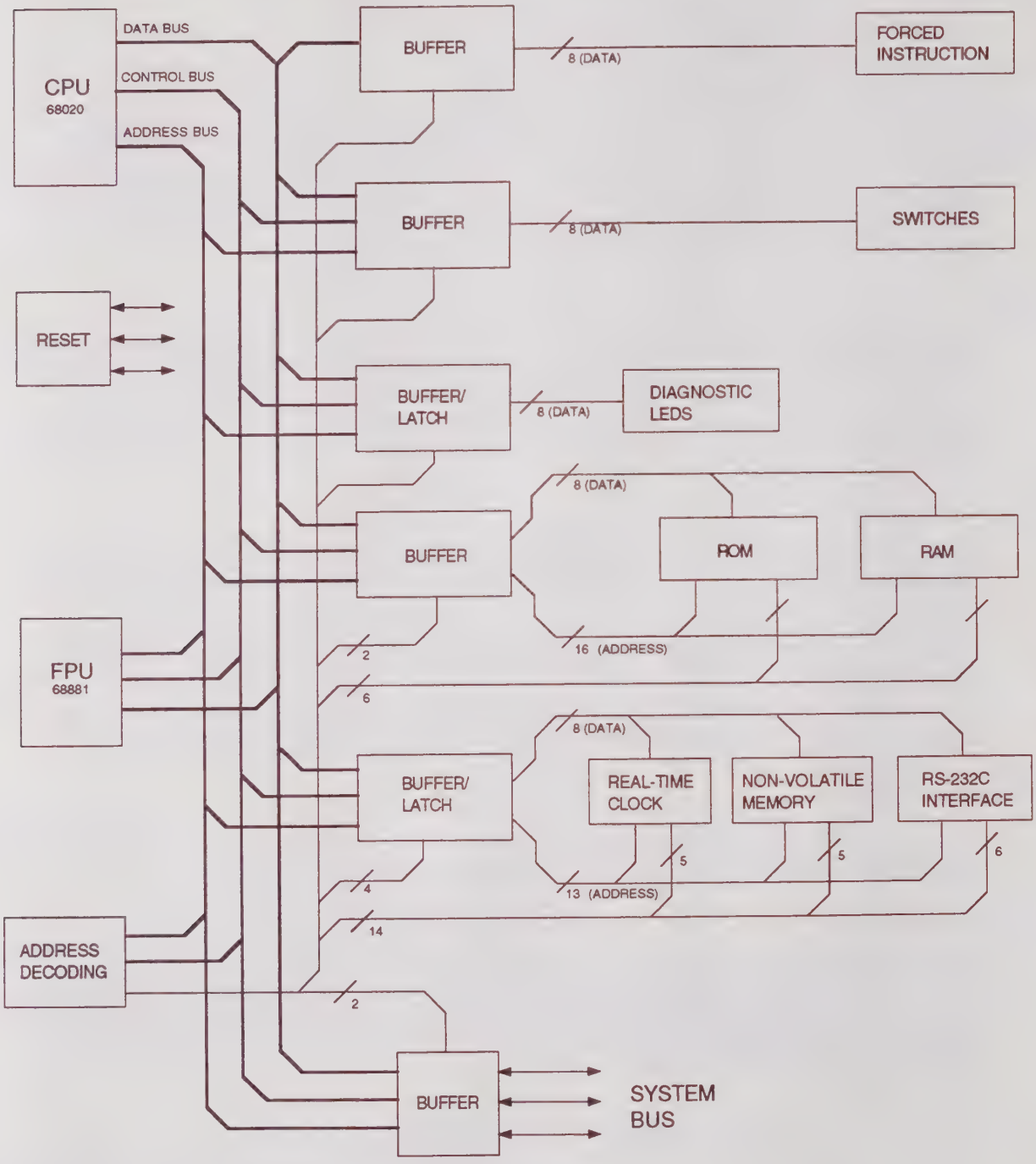


**Figure 5-5. CPU board block diagram.**

## CPU Clock

The CPU clock is a 33.3 MHz crystal oscillator divided by two to create the clock for the 68020 and 68881.

The CPU is divided into six main sections, with each section connected to the CPU bus by a buffer.

## System Bus

A buffer connects all 32 data and address lines and the appropriate control lines from the CPU bus to the system bus. The A6 EPROM/NVRAM, A7 data acquisition, A8 controller, and A9 display memory boards all interface with the A5 CPU board through the system bus.

## Forced Instruction

The forced instruction mode causes the microprocessor to become a counter. In this mode the microprocessor reads instructions from the data bus one byte at a time. This mode lets you verify that the main CPU bus is functional.

The forced instruction circuitry writes a bit pattern to the CPU bus that the microprocessor interprets as a "move quick" instruction. The pattern is also used as data. The forced instruction requires eight bits to perform (it uses the same 8 bits for both halves of the 16-bit instruction word), instead of the 16 bits required for a NO-OP (NO OPERATION) instruction.

Closing the CPU board's section "F" DIP switch (moving the switch to the Up position) enables the forced instruction mode. In this mode normal operation is disabled and the board is in diagnostic mode.

All on-board buffers are connected to data lines 24 through 31, the lines used by 8-bit buses. If these data lines are functioning in a way that won't allow the move quick instruction, the 68020 fails to count properly, or won't count at all. As long as the 68020 can count properly and receive DSACK, the system continues to run, counting the address lines. The lower 16 address lines change state quickly and are easy to observe with an oscilloscope. The next eight lines change state more slowly, and the top eight change state so slowly that they are impractical to check with this method.

The forced instruction mode also modifies the decoding of the on-board ROM and RAM. The ROM and RAM are decoded more frequently, allowing easier observation of their data lines. The ROM and RAM data buffer (not the ROM and RAM) is disabled by forced instruction mode

The remainder of the system is disabled in this mode, to make it easier to get the ROM and RAM section running. Once ROM and RAM are working, on-board diagnostics are available.

## ROM and RAM

The on-board ROM and RAM are both eight bits wide and consist of one memory device each. The ROM (boot ROM) is 512 Kbits (64K by eight bits) and contains on-board diagnostics. The RAM is 64 Kbits (8K by eight bits). The ROM and RAM provide the initial start-up information for the CPU. The 68020 initially executes instructions at address zero, the starting address of the boot ROM. On-board RAM at address 00020000 (hex) is used for data storage.

Under normal operation (after the boot sequence is complete) the 68020 executes instructions contained in EPROM on the EPROM/NVRAM board. System RAM on the display memory board is then used for data storage.

## Switches

The CPU board contains one six-section DIP switch. The first section, the forced instruction mode switch (F), is not routinely read by the CPU. The Auto-Reset switch (A), cache disable switch (C), and the MODE switches are read through the buffer during normal operation. The following table describes the function of each section of the switch.

Table 5-1
CPU Switch Functions

| Switch | Function |
|---|---|
| F | Forced Instruction |
| A | Auto-Reset Disable |
| C | Cache Disable |
| MODE 000 | Normal operation |
| MODE 001 | Forced touch screen calibration |
| MODE 010 | Factory use only |
| MODE 011 | Factory use only |
| MODE 100 | Password enable |
| MODE 101 | Forced touch screen calibration and Password enable |
| MODE 110 | Factory use only |
| MODE 111 | Forced Debug mode |

Other lines are read through the same buffer as the switches. These include:

NVMENABLE — Indicates whether the non-volatile memory devices throughout the instrument may be written to.

POWERFAIL — Notifies the CPU of an impending power failure.

OVERTEMP — Indicates that the power supply is about to be shut down by its temperature sensing circuitry. There is a short time delay between the assertion OVERTEMP and the time the supply actually shuts down.

The switches are read at address 00030000 (hex).

## LEDs

Eight green LEDs on the CPU board are written by software and could potentially be used for diagnostic purposes. The diagnostic LEDs are written to at the same address as the DIP switches, 00030000 (hex).

## On-Board Peripherals

The CPU has three on-board peripherals: a real-time clock, non-volatile memory, and an RS-232C interface with two ports. These peripherals have more intricate timing requirements than other circuitry on the board, and the decoding and timing circuitry deal with these needs.

### Real-Time Clock

The real-time clock provides time and date for printouts, reports, and stored references in measure mode.

If the on-board non-volatile memory is disabled the real-time clock can be read but not written to. Data from the clock is not read directly, but is read from a latch. The oscillator for the clock is referenced to the +5 V supply. The status of the +5 V supply is monitored at the 3.7 V lithium battery that provides the real-time clock backup power when instrument power is off. When the negative side of the battery drops below ground, the clock switches to the battery for power.

The real-time clock is at address 00050000 (hex).

### Non-Volatile Memory

Non-volatile memory stores RS-232C port setup information, touch screen calibration factors, and CRCs (cyclic redundancy checks) for the touch-screen circuitry.

When high, the NVMENABLE (non-volatile memory enable) line on the system bus enables VM700A non-volatile memory to be written. If the line is pulled low by an external hardware switch, non-volatile memory is effectively write-protected. J248 on the A11A2 main interface right board (one of three boards of the mother board assembly) and a plugged hole in the rear panel of the instrument (for a 9-pin D connector) allow disabling write to non-volatile memory by pulling the NVMENABLE line low.

The non-volatile memory is at address 00040000 (hex).

### RS-232C Interface

The RS-232C interface consists of a Motorola 68681 DUART (dual asynchronous receiver/transmitter) a PAL to control timing and prevent data bus conflicts, and an RS-232C driver for each of the two serial communications ports. Lines from the drivers to the rear panel serial ports are filtered to reduce EMI.

The RS-232C interface is at address 00060000 (hex).

## EPROM/NVRAM BOARD (A6)

The A6 EPROM/NVRAM board provides 3, 6, or 12 Mbytes of program storage in the EPROM array (depending on part size installed) and 256 Kbytes, 1, or 4 Mbytes of data storage in the non-volatile memory array (depending on the size of the parts installed). The non-volatile memory stores user-created configuration files and various system files. Figure 5-6 shows the EPROM/NVRAM board block diagram.

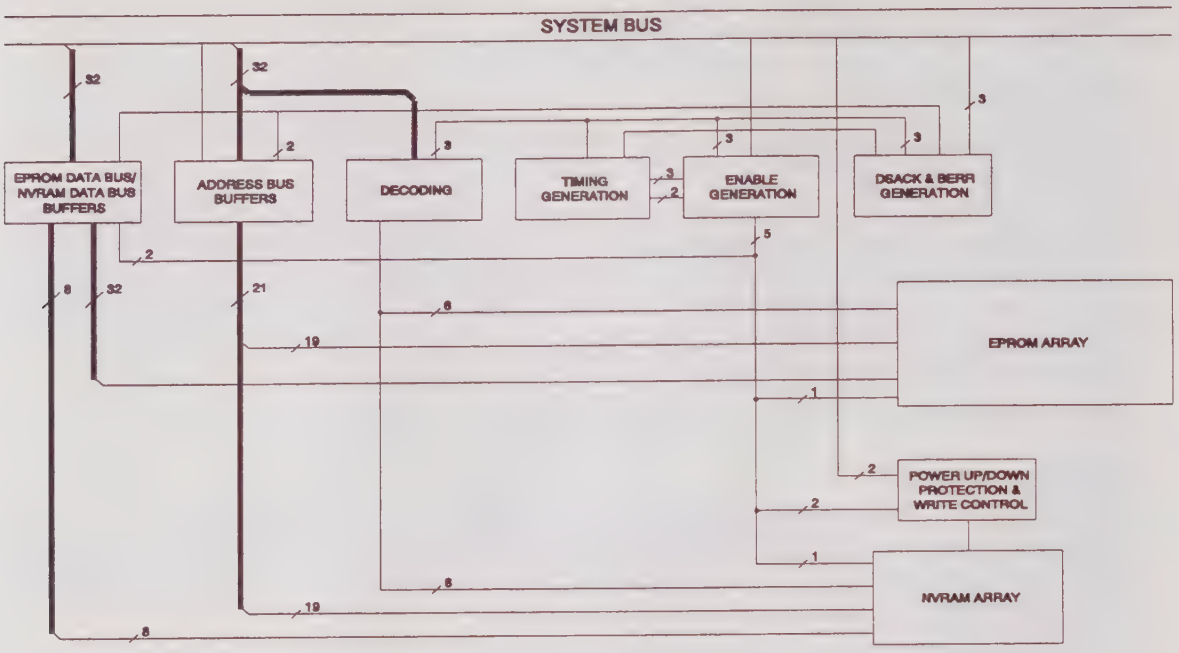


**Figure 5-6. EPROM/NVRAM board (A6) block diagram.**

The board is connected to the system bus (68020) and uses all data and address lines and the appropriate control lines. Separate buffers for each ROM and NVRAM array buffer data onto the bus. The EPROM array buffer is output-only onto the bus and is read 32 bits wide. The NVRAM array is read or written eight bits wide with bi-directional buffering.

## Address Bus Buffers

These buffer the least-significant address bits (A0 through A18) for the NVRAM array, and 19 address lines (A2 through A20) to the EPROM array. Because the EPROM array is addressed in 32-bit words, the two least-significant bits are not used.

The data bus from the EPROM array is a 32 bit bus. If the CPU needs only a single byte or a 16-bit word from the EPROM array, it still receives a 32-bit word (long word) and sorts the desired byte or word from the 32-bit long word (the 68020 does this automatically).

The data bus from the NVRAM is an 8-bit bus. Two read/write cycles are required for the CPU to get a 16-bit word, or four read/write cycles to get a long word from the NVRAM array.

## Decoding

Decoding determines which (if any) EPROM set or NVRAM to access. When the address on the system bus is on the board but outside the location of the EPROM or NVRAM arrays, the board generates a bus error (BERR) signal.

## Timing Generation

Timing generation supplies the timing needed to access the EPROM and NVRAM arrays. When an access to the EPROM array begins, so does a timing cycle. At the end of an appropriate access time, a DSACK (Data transfer and Size ACKnowledge) signal is generated. The same is true of

the NVRAM array. In both cases, timing signals for enable generation are produced to prevent bus conflicts with other boards.

## Enable Generation

Enable generation provides output enables for the EPROM and NVRAM arrays. With the appropriate timing these enables prevent data conflicts on the board's internal bus.

## DSACK and BERR Generation

### BERR Generation

When the address on the system bus is on the board but decodes to a location outside the valid address range of the EPROM or NVRAM arrays, a bus error (BERR) signal is generated. The hardware can't tell if an EPROM is missing or failed, so an access in either of these situations doesn't produce BERR.

After an address strobe to the board occurs, the bus error generation circuitry waits approximately 100 ns and checks for EPROMSEL (EPROM SELect) or NVSEL (NVRAM SELect) output to be true. If neither are true, then the address is outside a valid address range and a BERR is generated.

BERR is also generated if there is an attempt to write to a valid NVRAM address while the NVMLOCKED signal is asserted.

If the SYSRESET (SYStem RESET) line is pulled low when an access occurs (this should not occur under normal circumstances), the write-enable lines to the NVRAMs are inhibited and BERR is not generated.

### DSACK Generation

If either a ROMSEL or NVSEL output is true when checked at the end of 100 ns, DSACK generation is enabled. Actual assertion of DSACK*n* is at a time appropriate to the speed of the memory devices being used.

When the EPROM array is accessed, both DSACK0 and DSACK1 are asserted, indicating to the CPU that the access is 32-bits wide. When the NVRAM array is accessed, only DSACK0 is asserted, indicating to the CPU that the port being accessed is only 8-bits wide. For more information on how DSACK is used, refer to Motorola's *MC 68020 User's Manual.*

## Power Up/Power Down Protection and Write Control

### Write Control

The NVMENABLE (Non-Volatile Memory ENABLE) line on the system bus enables VM700A non-volatile memory to be written as long as it is high. If the line is pulled low by an external hardware switch, the non-volatile memories are write-protected. J248 on the A11A2 main interface right board and a plugged hole in the rear panel of the instrument (for a 9-pin D connector) allow the user to disable writing to non-volatile memories by pulling the NVMENABLE line low. NVMENABLE is buffered and becomes NVMLOCKED.

### Power Up/Power Down Protection

Power up/power down protection prevents a write enable from being asserted while TTL logic levels fluctuate during power-up or power-down. During power-down, CMOS logic prevents writing to non-volatile memory until TTL levels drop to about 2 V. When TTL levels are 2 V or lower, memory devices don't respond to input.

# DATA ACQUISITION BOARD (A7)

## Introduction

The data acquisition board is a programmable data interface between the ADC board and the 68020 microprocessor on the controller board. ECL-level data from the ADC board is sent to the controller board where it is converted to TTL levels, then passed to the data acquisition board. The controller board can be programmed to recognize data sequences and generate signals to the data acquisition board, telling it when to perform various tasks. Figure 5-7 shows a block diagram of the data acquisition board.

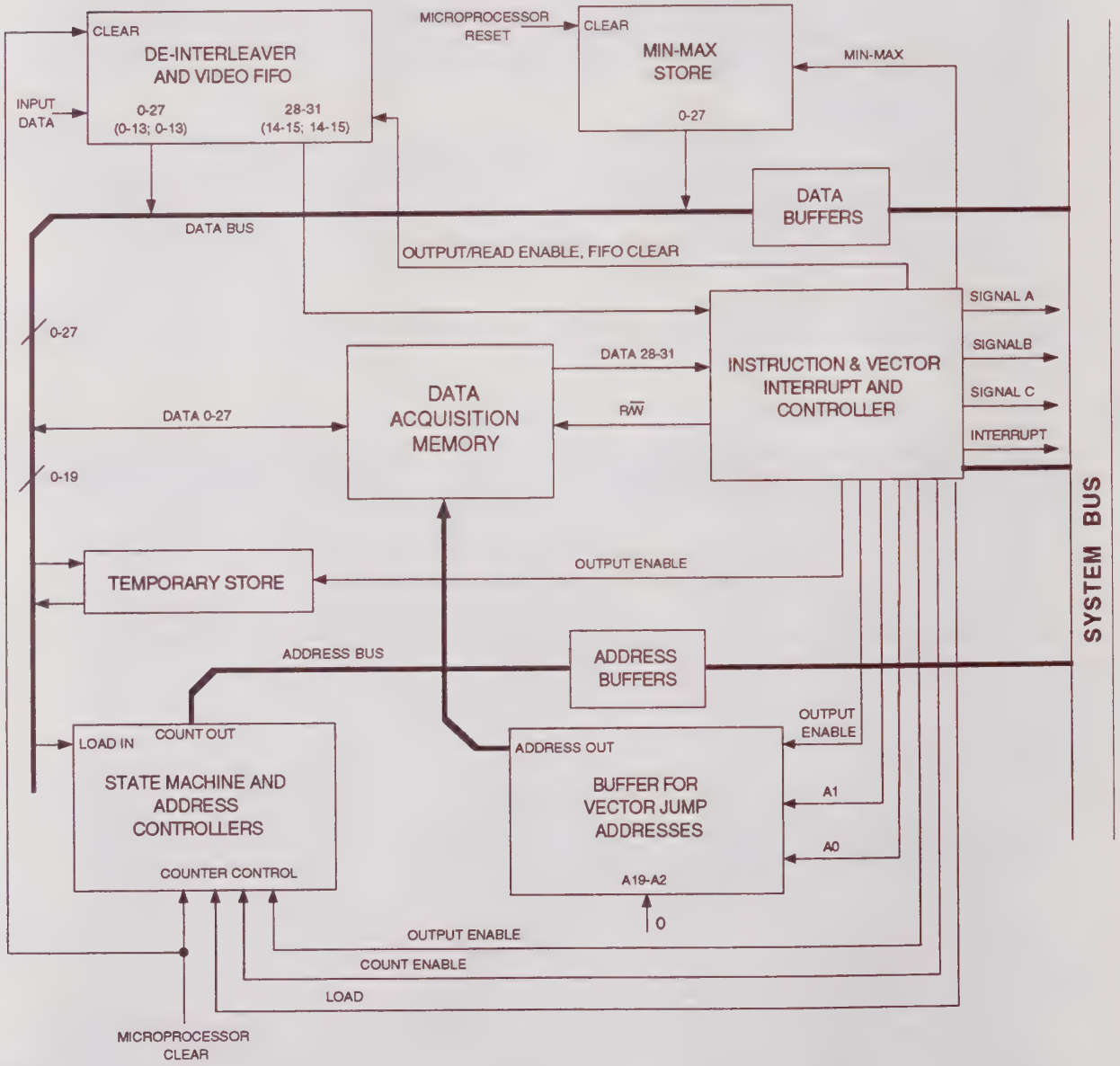


**Figure 5-7. Data acquisition board block diagram.**

## Data and Clock Inputs

Data enters the board via a 34-way connector, and consists of 16 data wires (D0-D15 on pins 2-17) and a clock wire (pin 32). Data entering the board must be stable for at least 10 ns before and after the clock's rising edge.

In the clock duty cycle the clock must be high for at least 5 ns, and low for at least 6 ns. U36B and U37 reshape the input clock, giving a 25-ns high pulse in each clock duty cycle. This reshaping gives the FIFO dual-port RAM ICs the required write and chip-select pulse widths for input clock rates of up to 20 MHz.

## FIFO Input

Sixteen-bit wide data at up to 20 MHz enters the dual-port RAM FIFO (U40-47) where it is demuliplexed to 32 bits at 10 MHz. The reshaped clock drives a GAL grey-code counter (U39) programmed to give a clock/2 output on pin 12 and the inverse on pin 14. When it is low pin 12 writes to U40 through U43, and pin 14 does the same for U44 through U47.

On the transition to pin 12 low, a grey count from pins 15 through18 of U39 changes to the next count, so the grey count counts at half the input clock rate. Two 16-bit writes can occur at each count address.

The grey count drives the write-address bus of the dual-port RAM ICs. The WE-2 input on each RAM IC is driven from the reshaped clock.

## FIFO Output

Device U48 resamples the FIFO grey code write address on the read clock, while U49 (a PROM) generates the FIFO output read address. Device U49 also generates these signals:

- Next read address on pins 9-13
- FIFO overflow on pin 14
- FIFO Has Data (FHD) (true=High) on pin 16 and its complement (NFHD) on pin 15
- FIFO Almost Full (FAF) signal on pin 17

The FAF signal goes low when FIFO occupancy is greater than or equal to 10 (in the range 0-15). The FHD signal goes high when FIFO occupancy is greater than or equal to 2 (in the range 0-15).

A FIFO Read Count Enable (FRCE) signal goes low to allow the FIFO read pointer to increment. When FIFOCLR goes low, it clears the FIFO by setting the read pointer equal to the write pointer, and also forces the FHD and NFHD lines high (not mutually inverted), FAF low, and FIFO overflow high (false).

When FHD goes high it allows the state machine to run. When FIFOCLR goes high NFHD also goes high to stop FRCE from spuriously incrementing the read pointer (U35 pins 5 and 6).

## The State Machine

This synchronous state machine includes a microcode instruction interpreter (U14 through U17). This interpreter reads data bits RD28-31 to the state machine as microcoded instructions. The interpreter also reads the FIFO trigger signals for vector interrupts (FT00-03). The state-machine program counter (a 20-bit counter, U7-U11) is also the address to write data to acquisition memory from the FIFO.

The address is fed to acquisition memory via U3-4. The outputs of U3-U4 are usually enabled onto the memory address bus. However, U1-U2 can be enabled by the microcode interpreter to generate the special vector interrupt addresses.

U1-U2 have their inputs tied low except for pins 2 and 3 of U1; these are driven from the microcode interpreter. When a 68020 microprocessor access is granted, the state-machine is halted by gating the clock, and U5-6 are enabled to send the required read/write address to acquisition memory.

The temporary store (U12-U13) can be enabled onto the data bus from the microcode interpreter. The data bus also goes to the load inputs of the counters U7-U11. The clear inputs to the counters are not driven from the microcode interpreter, but rather from a specially decoded 68020 address that allows the user to clear the state-machine for a new acquisition.

When it is high, the state-machine disable signal (SMDIS) disables state-machine access to the memories (on pin 1 of U1-U4) and disables data bus access with U18, without affecting the state-machine state.

The microcode interpreter is prevented from reading false instructions when the outputs of U1-U2 are enabled.

## The Main Clock

The main board clock is U20, a TTL-output compatible crystal oscillator running at 11.000 MHz. To get the correct clock shape for the acquisition RAM write pulses, the clock is shaped by U21-U22 to go high for 20 ns in each cycle on pin 7 of U21. Pin 6 of U21 is (CK).

Inverted by the clock gates U23, (CK) provides the state-machine clock and r/(w) mode selection for the bottom 28 acquisition RAM data bits (R/WLS28) and the top 4 bits (DR/W) separately. This clock arrangement allows the state-machine to simultaneously write to the bottom 28 bits of the acquisition memory and read instructions from the top 4 data bits.

## The 68020 Microprocessor Interface

Because the acquisition board has it's own 11 MHz clock, it is independent of the 68020 microprocessor. The advantage of this independence is that if different microprocessor clock rates are used it doesn't affect the operation of the acquisition board as long as the board meets bus timing requirements.

But the microprocessor interface is asynchronous into the acquisition board. Interface circuits allow read and write requests to be synchronously interfaced to the board clock.

Any 32-bit address causes U25 pin 19 to go low if its top 8 bits match the setting of SW1 (DIPSW). In the 68020 access cycle, (AS) goes low shortly after, latching the pin-19 signal into U33a. Pin 7 (Q) then goes high, latching the address into U5-U6 (on ACLK), and also latching the r/(w )line from the microprocessor into U32a. There is now a r/(w) access request signal high on U33 pin 6 and a read/write select occurring slightly later on U32 pin 6.

Because of the delay, if the r/(w )access request and read/write select signals are immediately re-sampled, an access request could be sampled with an invalid r/(w) select. For this reason the access request signal is delayed 45 ns by clocking it on (CK) (derived from pin 6 of U21 into U33B). Both signals are then re-sampled: r/_w by U30:D0, and ACCESS by U32B (a JK flip-flop that sets an access service request). Device U31 is a array logic device programmed to handle access logic.

If the access request is granted pin 18 goes high and clears the request on the next clock period at pin 14 of U32B. Simultaneously, U30 pin 14 goes low. On the following clock period U30 pin 15 goes low (AOE), disabling the state-machine clock on U32 pin 13 and selecting pins 2-5 to feed pins 4-7 (respectively) of U24. These signals come from a delayed version (via U30:D7) of the r/(w )signal, allowing the microprocessor 32-bit-wide read/write accesses to the acquisition memory for one clock period.

Control lines on U26-U29 allow bi-directional access to the memory from the microprocessor data bus. U26-U29 are latched bi-directional interface ICs that accept data from B-A (CBA) on a falling

(DS) signal (via U19C) or latch from A-B (CAB) from U31 pin 17 via U30:D2. U31 drives the output enables (GAB, (GAB)) separately.

The state-machine clear signal is decoded on a write access with A23 high on U31 pin 3. SMCCLR goes low one clock period later. U48:d5-7 are a SMCCLR pulse extender from 1-4 clock pulses because IC31 is programmed as a flip-flop that is reset when its pin 8 goes low.

The DSACK0-1 signals are driven from U34, a specially programmed array logic device. When pins 2-3 (for DSACK0-1) go low, these signals pull the DSACK lines low, but when are set high they pull the DSACK lines high until they reach a logic-high state. The DSACK0-1 signals then go open-circuit on the DSACK bus.

Pins 2-3 are pulled high when the (DS) signal is high from the processor, pulling the (CLR) signal low on U21B pin 15. When the (DS) line goes low, the J input to U21B is high, so the state of U21B remains unchanged.

When the access granted signal on U31 pin 18 goes high (this event is delayed by one clock period through IC30:D1) a clock period later, the (Q )output of U21B goes low and pulls the DSACK signals low. The signals are asynchronously reset when (DS) goes high again, completing the handshake cycle.

***NOTE***

*All clock-period delays used in this circuit are required for operation. These must not be changed for any reason.*

### Data Acquisition Memory

The acquisition board accepts 16k x 4 static RAMs with 55 ns (or lower) access times, and with industry standard pinout. The memory may be of any static type (as long as it's fast enough) with up to 20 total address bits and 32 data bits, where the top 4 data bits can have r/(w) control independent of the bottom 28 bits.

The chip-select control (U38) selects the 32-bit-wide bank according to the most significant 3 address bits above the individual device address range.

### Min-Max IC

The Min-Max IC (U383) holds the FIFO minimum and maximum data the until it is read, then it restarts. This IC also samples frame/line sync and overflows.

## CONTROLLER BOARD (A8)

The controller board performs these functions:

- Controls the VM700A's analog front end
- Receives and processes digitized data from the ADC board and passes it to acquisition memory
- Controls acquisition patterns

Figure 5-8 shows a block diagram for the controller board.

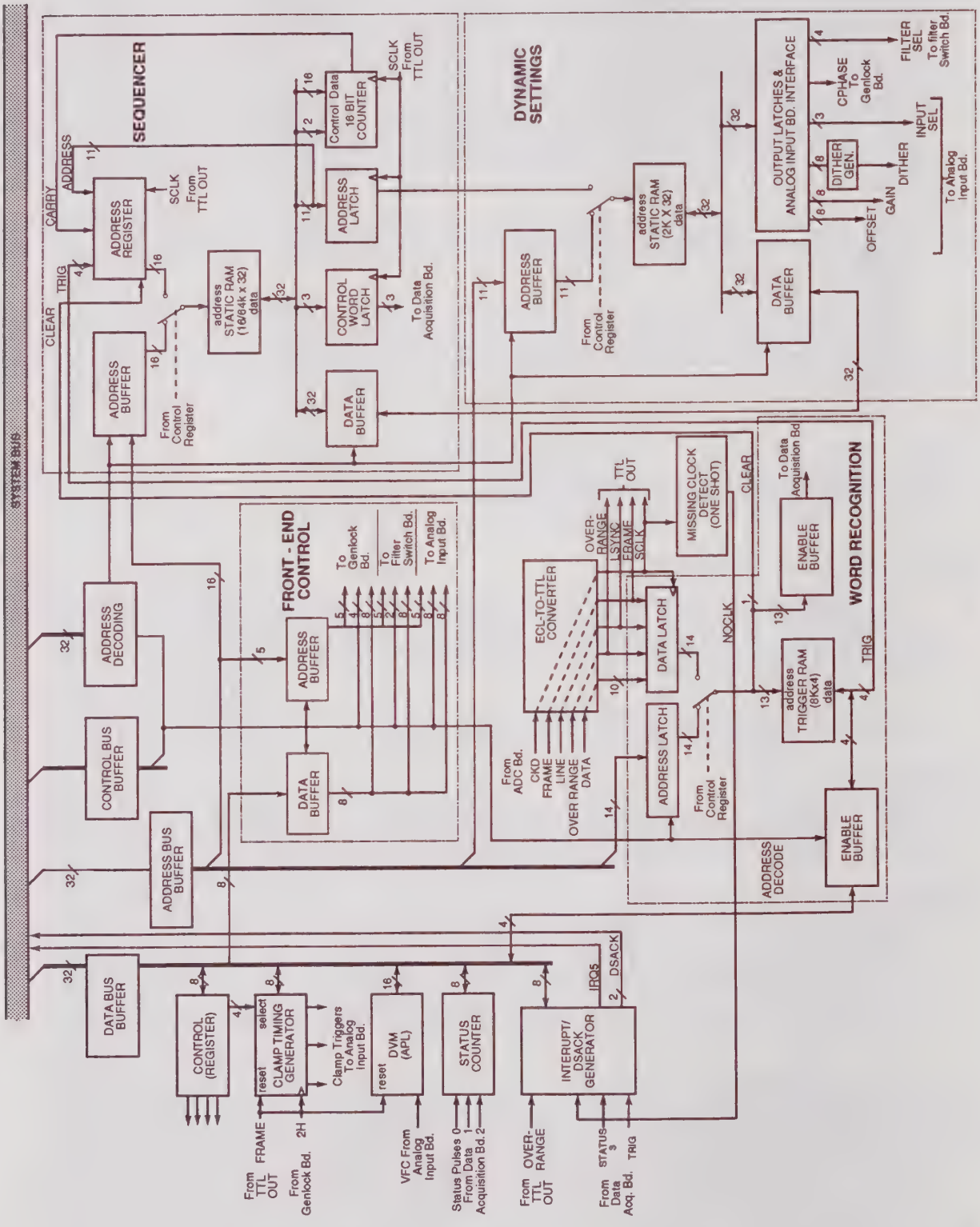


Figure 5-8. Controller board block diagram.

## Bus Buffers

All 32 data lines and the required control and address lines from the system bus are buffered on this board. Many of the data and address lines are buffered on the board a second time before being used to drive multiple devices.

## Address Decoding

Address lines A20 - A31 are decoded into 7 control signals. These address lines and the control lines buffered from the system bus direct the operation of the controller board.

### Analog Input Board Interface

This block (not on the block diagram) is an extension of main address decoding. Its performs the following functions:

- Enable the controller board DVM block
- Clock four control registers on the analog input board (the mode control and DVM selection blocks)
- Latch 12 bits of data into the calibration DAC (located on the analog input board)
- Load eight bits of data into each register of the bias and clamp level octal DAC (located on the analog input board).

## Control Register

The control register reads eight bits from the controller board data bus. Four of these bits control the clamp timing generator. Two bits are used to set the ADC board's diagnostic mode. One of the two remaining bits sets the mode of the word recognizer, and the other sets the mode of the sequencer and dynamic settings circuitry.

## Clamp Timing Generator

An EPROM stores 16 patterns selected by the four bits from the control register. The selected pattern provides gating for input signal clamping and the DVM. The gating information is fed to a PAL that drives a triple timer/counter. The ATRIG, BTRIG, and CTRIG outputs from the triple-timer/counter drive a one-shot multivibrator on the analog input board. Trigger pulses are generated for each line where clamping is to be applied. These pulses determine the point on a line where clamping begins; other control lines on this board control circuitry on the analog input board that sets the clamp level and duration.

The FRAME and 2H signals (from the ADC board via the ECL-to-TTL converter and from the genlock board, respectively) provide timing information to the EPROM.

## DVM (APL)

The analog input board converts an analog average of the selected channel's input video level to a frequency output. The DVM is a 16-bit counter enabled by the gating pattern from the clamp timing generator. The DVM is reset every frame by the FRAME pulse.

## Status Counter

This triple-timer/counter counts status pulses from the data acquisition board. The status pulses may be used by applications to indicate events occurring in an acquisition pattern.

## Interrupt/DSACK Generator

This block generates DSACK (data transfer and size acknowledge) for most of the slower devices on the controller board and generates interrupt request IRQ5.

Two lines on the data acquisition board (INT and STATUS3) generate the interrupt request. The microprocessor then reads an 8-bit register to determine the interrupt source.

## Front-End Control

The previously buffered data and address lines are buffered again and sent to the front end of the instrument, along with buffered control lines and address decodes. These lines, through a separate connector to each board, control the operation of the analog input board, the genlock board, and the filter switch board.

## ECL-To-TTL Converter

The differential ECL signals from the ADC board, D0 - D9, FRAME_OUT, LINE_OUT, CKD (ClocK Data) and OVERRANGE are converted to single-ended TTL outputs before being used by the controller board.

## Missing Clock Detector

The missing clock detector is a one-shot multivibrator that sends the signal NOCLK if no clock transitions are detected for approximately one microsecond. The NOCLK bit indicates that clock is missing so the application can respond appropriately.

## Word Recognition

The word recognition circuitry is used by applications to identify bit patterns in the digitized data. It also sends digitized data from the ADC board to the FIFO (first-in, first-out) circuitry on the data acquisition board.

### Data and Address Latches

The data from the ADC board is latched into the data latch and clocked out by SCLK, re-synchronizing the data to the clock signal. The microprocessor loads an address latch with 14 bits of address. A bit from the control register,TRUN, can switch the trigger RAM input from data latch output (normal operation) to address latch output. Switching trigger RAM input to address latch output allows the microprocessor to access the trigger RAM. The microprocessor then writes a 4-bit pattern into the trigger RAM through the 4-bit enable buffer.

One of the 14 bits from the data or address latch clears the address register in the sequencer. The other 13 bits (10 bits of data, over-range, FRAME, and LSYNC) are sent to the trigger RAM and an enable buffer, which sends the data to the data acquisition board.

### 4-Bit Enable Buffer

When enabled by the appropriate control lines the microprocessor writes patterns (before an acquisition) into the trigger RAM through the 4-bit enable buffer.

### Trigger RAM

The trigger RAM performs the actual word recognition. When the microprocessor writes an appropriate 4-bit wide pattern into the trigger RAM (from the 4-bit enable buffer), the four output bits change when certain ranges of input data (identified by bit pattern) occur. The output is four bits of the 16-bit input to the sequencer.

Input data that causes output bit changes includes (but is not limited to) sync, active video, tape drop-out, and zero carrier pulse.

## Sequencer (State Machine)

Sequencer output drives the dynamic settings circuitry and sends control bits to the data acquisition board. These control bits cause the program counter on the data acquisition board to jump to preset addresses.

As with the word recognition circuitry, the sequencer's static RAM is loaded with program information from the microprocessor and used as program memory. A bit from the control register (SRUN) enables address and data buffers of the system bus to have access to static RAM.

### Address and Data Buffers

When the address buffer is enabled, the static RAM can be read and written by the microprocessor from the data buffer before starting the sequencer.

### Address Register

The normal input to static RAM is the 16 bits from the address register. The four TRIG bits, the OVERFLOW bit, and 11 bits (out of 32) from the output of static RAM comprise the 16-bit input to the register. The TRIG bits are the output of trigger RAM. The 11 address bits are the 11 LSBs from the output of the sequencer static RAM that are also fed through an address latch to the dynamic settings static RAM as its normal input. (Nine of these bits are used in current hardware; the other two are reserved for future expansion.)

### Static RAM

The 32-bit word output of the static RAM memory block goes to a number of circuits when the sequencer is running. Eleven bits of the output are fed to an address latch. The same 11 bits are also routed to the address register as the program counter. Sixteen bits of the output are fed as data to the 16-bit counter, while two more bits provide counter control.

### 16-Bit Counter

Sixteen of the 32 bits output by the sequencer static RAM are used as data by this counter. The two control bits determine the count direction and whether the counter is to be loaded with the 16 data bits or is to hold the current count. When the counter overflows, the CARRY bit is returned to the address register. The CARRY bit can be used to count samples, lines, frames, or whatever the application needs to count.

### Address Latch

The 11 bits received by the address latch are clocked through to the dynamic settings static RAM. These are the same 11 address bits that are returned to the address register from the output of the sequencer static RAM, but delayed one clock cycle.

### Control Word Latch

This latch holds a three-bit control word issued to the data acquisition board. These control bits cause the program counter on the data acquisition board to jump to preset addresses.

## Dynamic Settings

This circuitry sends additional front-end control data to the Analog Input, Genlock, and Filter Switch boards. The key requirement for this block is that its outputs must be able to change rapidly, because offset, gain, dither, input selection, and filter selection may change many times during a single line of video.

The dynamic settings static RAM can be accessed by the 68020 anytime, even during an acquisition. The same control bit (SRUN) that disables the sequencer static RAM determines if the microprocessor access requires synchronization.

### Dither Generator

Six of the eight bits sent to the dither generator are used as data and the remaining two are for control. The dither generator's four control states are: clear, sequence to the next dither level, hold the current level, or load a custom six-bit dither value.

Figure 5-9 shows the dither generator's pre-defined, built-in dither waveform sequence.

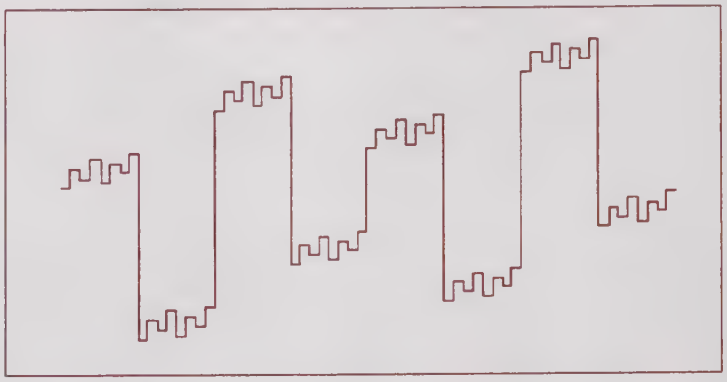

**Figure 5-9 Dither generator's 64-step dither waveform.**

### Address and Data Buffers

When the dynamic settings address buffer is enabled the 68020 can read or write the dynamic settings static RAM from the dynamic settings data buffer. This can occur while the sequencer is running.

### Static RAM

Static RAM input from the 68020 may be buffered or it may be connected to the 11-bit output from the sequencer address latch. The 11-bit output from the sequencer allows for different dynamic output settings for each step of the sequencer program.

### Output Latches and Analog Input Board Interface

The 32 bits of output latches are divided this way:

- Eight offset bits
- Eight gain bits
- Eight bits to drive a dither generator
- Three bits of input selection control
- The CPHASE bit inverts the clock phase on the genlock board to allow sampling midway between previous samples.
- Four bits control filter selection on the A4 filter switch board

# DISPLAY MEMORY BOARD (A9)

The display memory board contains both the video display circuitry and instrument system RAM. This board also contains the front panel and touch screen microprocessor (and its associated support circuitry), a Motorola 68008. Figure 5-10 shows a block diagram of the display memory board.

## Address Decoding

This block performs coarse address decoding (fine decoding is performed where the decoded signals are needed).

## Bus Buffers

All 32 data lines and some address and control lines from the system bus are buffered as they enter the board.

## Video Display Generator

### Video Control Register

The video control register controls the video window displayed on the CRT. Of 2048 lines of video in video memory, 480 can be displayed at one time. The value in the video control register determines where the first line (of the 480) is located in video memory. This line can be anywhere in the 2048 lines of video memory because the video can wrap from the end of memory to the beginning, if desired.

### Video Address Counter

The video address counter counts video lines for the video RAM address generator. Vertical sync pulses reset the value of the counters to the value in the video control register. The count increments by one each time the video address counter receives a horizontal sync pulse. The output of this counter is the address to the video RAM address generator.

### Video RAM Address Generator

The video RAM address generator multiplexes the three types of video RAM accesses; refresh, video, and CPU access. All video RAM accesses are through this block and require decoding before they can be used by the video RAM.

### Video RAM Selector

The video RAM selector controls the enabling and disabling of the individual memory devices in the video RAM. Because these devices are slow, the video RAM selector disables one device while the next is being read and the third is being enabled. This scheme significantly increases the output speed of video RAM.

### Video RAM

The video RAM is dual-port dynamic video RAM. Each memory device is 64K by 4 bits. Each row of eight devices stores data for one of the two bit planes. Pixels are clocked out of the two rows in parallel, but 32-bit access by the CPU can be performed independently on either row.

Video RAM is accessed in three ways; refresh, video, and CPU. The refresh access simply takes the refresh address generated by the dynamic RAM controller's timing/arbitration logic and places it on the video RAM address lines. A video access is a video RAM data transfer (a multiplexed address). First the rows and then the columns supplied by the video address counter are fed into the video RAM.

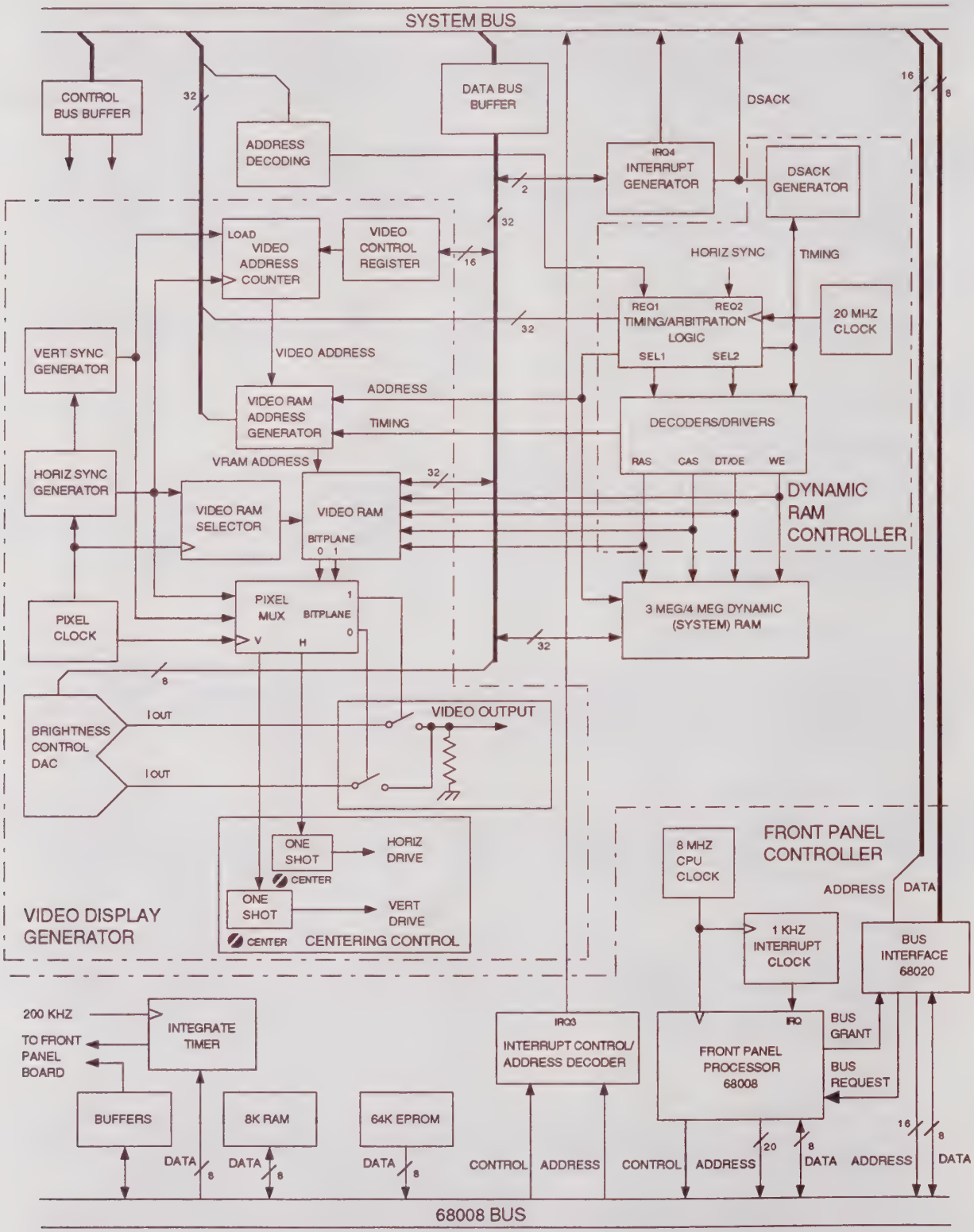


**Figure 5-10. Display memory board block diagram.**

Microprocessor access is also a multiplexed operation. In this case, the system bus address lines supply the row and column information. The microprocessor has a 32-bit parallel access to video RAM. The output port of video RAM provides two 8-bit data streams (one for each bit plane) to the pixel multiplexer.

### Pixel Clock, Horizontal and Vertical Sync Generators

The pixel clock is a 25 MHz oscillator that is divided by the horizontal sync generator to the 30.6 kHz horizontal scan rate. The horizontal sync pulse is asserted during the horizontal blanking interval.

The 30.6 kHz horizontal sync pulse is divided to exactly 60 Hz by the vertical sync generator. The vertical sync pulse is asserted during the vertical blanking interval.

Besides supplying the horizontal and vertical drive for the CRT display, vertical sync also resets the video address counter to the value in the video control register. Horizontal sync increments the count of the video address counter. It also issues a data transfer request to the dynamic RAM controller.

### Pixel Multiplexer

The pixel multiplexer receives the two, 8-bit data streams and converts them into serial data streams corresponding to the two bit planes on the display.

### Brightness Control DAC

The brightness control DAC (an 8-bit dual DAC) sets the brightness level for each bit plane. Writing an 8-bit word to the DAC sets current levels that drive the video output circuitry. The current outputs are switched on and off by the pixel multiplexer.

### Video Output

The video output circuitry multiplexes the switched currents from the brightness control DAC into a single current source, which becomes the video signal. Should the same pixel in both bit planes be on simultaneously, the brighter of the two pixels receives priority. The video signal is sent to the monitor through a cable with 150 Ω impedance to ground.

### Centering Control

The vertical and horizontal drive signals are derived from the vertical and horizontal sync pulses. These sync pulses are passed through one-shot multivibrators to the monitor assembly. Centering is accomplished by varying the transitions of the one-shots.

### Interrupt Generator

Every vertical sync pulse generated creates an interrupt request, IRQ4. Vector mode uses this interrupt to switch video windows every frame to prevent flashing or streaking on the display.

The interrupt generator also generates DSACK from all registers on the board except DRAM.

## Dynamic RAM Controller

### 20 MHz Clock

The 20 MHz clock provides timing for the timing/arbitration logic block. It is also divided to 76 KHz to supply the refresh clock.

### Timing/Arbitration Logic

The heart of this block is a dual-port dynamic RAM controller. By handling requests from two processors, this controller allows dynamic RAM to be used as dual-port RAM. It also generates the necessary timing signals and handles the refresh timing and address multiplexing for the system dynamic RAM. Address multiplexing for the video RAM is performed by the video RAM address generator.

Instead of two processors accessing standard dynamic RAM, this implementation uses a processor and a video generator (and support circuitry) to access dual-port dynamic video RAM.

Microprocessor address decode enters the block as REQ1, horizontal sync as REQ2. Every horizontal sync pulse causes another data transfer in the video RAM. An internal shift register in video RAM receives data from the RAM array. The data is then shifted out as a line of video.

The dual-port dynamic RAM controller IC (with its internal refresh counter) synchronizes REQ1 and REQ2 to the 20 MHz clock and allows only one type of request at a time.

### Decoders/Drivers

The decoders/drivers decode and route the signals from the timing/arbitration logic to the appropriate block of memory.

Here are the ways this block handles RAM accesses:

- Refreshes all RAM simultaneously
- Transfers data to both rows (bit planes) of video RAM simultaneously
- During any microprocessor read or write access, decodes the rows of RAM (decodes one of two rows of video RAM or one of four rows of system RAM)

During a microprocessor write access, additional decoding determines which of the four bytes will be written. The 68020 can write from one to four bytes into memory at a time, so the decoders/drivers must decode the number of bytes to be written and enable only the appropriate number of RAM ICs for that data.

### DSACK Generator

The DSACK generator provides the rapid signal generation needed to run the dynamic video RAM and dynamic system RAM with a minimal number of wait states. This DSACK generator is much faster than the DSACK generator in the interrupt controller.

## System RAM

System RAM consists of 3 MBytes of dynamic RAM, but for future expansion the circuit board's capacity is 4 MBytes. Currently, 24 of the possible 32 one-megabit devices are installed on the circuit board.

Each memory device is 256K by 4 bits, so eight are required to fill the 32 bit bus. Each row provides one MByte of RAM.

## Front Panel Controller

### 68020 Interface

The 68020 interface consists of buffers and timing circuits that bridge the 68020 system bus with the 68008 bus. The 68020 sends an address that is decoded by the 68020 interface as a bus request. When the 68008 completes its current instruction, it issues a bus grant and surrenders the bus. The 68020 interface hardware then connects the 68020 to the 68008 bus so it can read or write the program

execution RAM (8K RAM). When the read/write is complete, the bus request is removed after a 1 microsecond time-out. After removal of the bus request the 68008 continues to execute its program.

### 68008 Microprocessor

This microprocessor controls the A10A1 front panel board and A10A2 keypad board, and interfaces those circuits with the main processor (the 68020). The CPU clock provides the 8 MHz reference for the 68008.

### 1 kHz Interrupt Clock

This clock (actually 976.5625 Hz) generates 1 millisecond interrupt requests to the 68008. This interrupt is derived from the 8 MHz CPU clock and is used for timing and debouncing of the push buttons on the A10A2 keypad board.

### Interrupt Controller/Address Decoder

Four address lines are decoded to select various devices on this board that are on the 68008 bus. This block also generates interrupt request IRQ3 to interrupt the 68020 when needed.

### 64K EPROM/8K RAM

The 64K EPROM stores the programs that the 68008 runs. The 8K RAM provides space for program execution.

Although the 8K RAM is not dual-port RAM, the bus arbitration employed yields that effect. Either the 68008 or the 68020, through the 68020 bus interface, can access this RAM.

### Buffers

The eight data lines, four address lines , and a few control lines are buffered before being sent to the A10A1 front panel board.

### Integrate Timer

The integrate timer provides varying width pulses to the integrator on the A10A1 front panel board. The integrator circuitry scales the input to an ADC to use most of the ADC's dynamic range without overdriving it. This provides accurate identification of a "touch" location.

The integrate timer block consists of a divider and a counter. A 200 kHz clock (CLK200) from the A10A1 front panel board is divided into 80-microsecond pulses that are counted by the counter. The 68008 loads an 8-bit value into the counter, which always counts to 255. The actual integrate time is varied by loading the counter with a different starting value.

The 68008 also uses the integrate timer's counter output as a hardware timer for some operations to eliminate dependence on software timing loops.

## FRONT PANEL BOARD (A10A1)

The front panel board decodes input from the control knob and touch screen and relays push button and LED information to and from the A10A2 keypad board.

The front panel board's connector to the display memory board contains most of the lines of the 68008 bus, including lines for relaying push button and LED information to and from the keypad board. Additional lines for power and the signals INTEGRATE and CLK200 are provided. Figure 5-11 shows a block diagram for the front panel board.

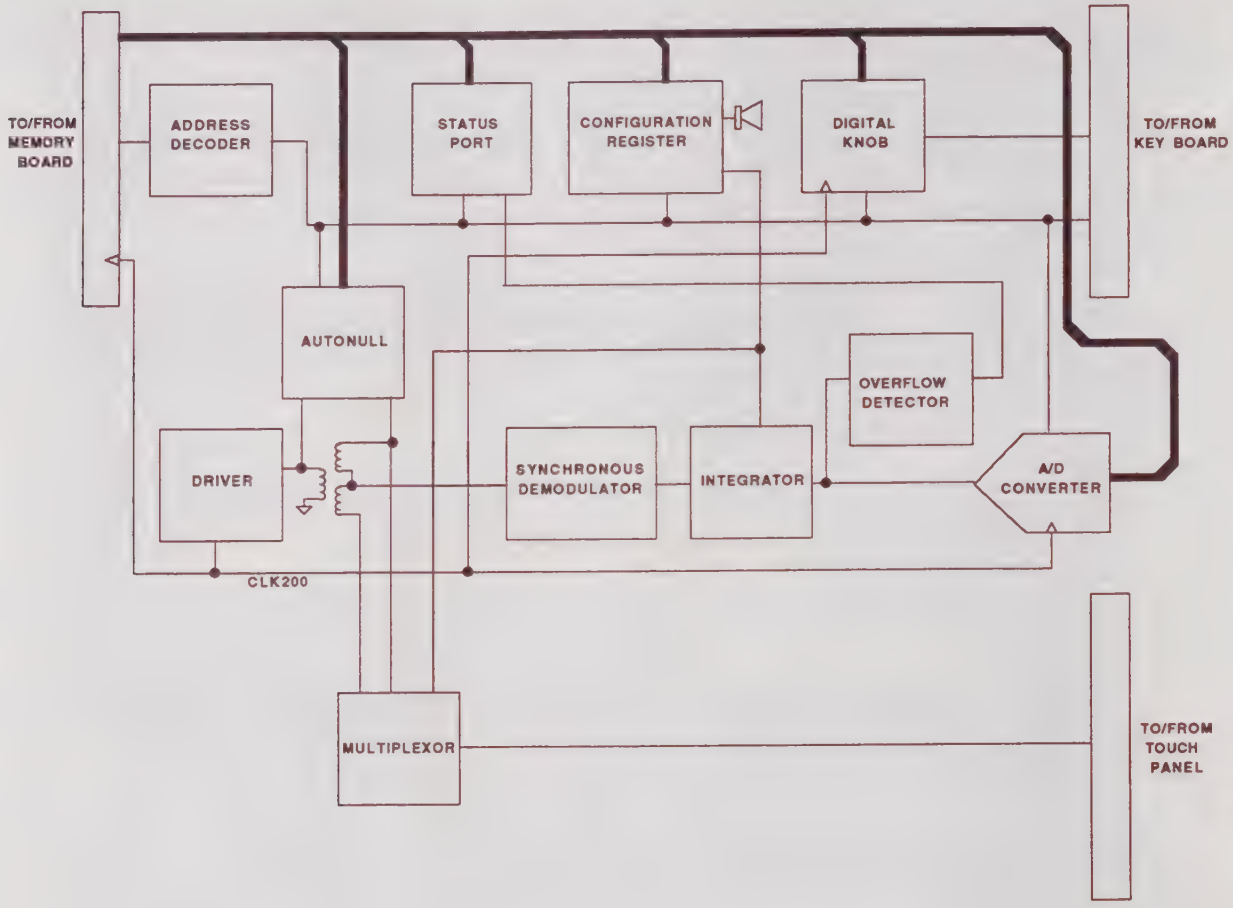


**Figure 5-11. Front panel board block diagram.**

## Address Decoder

Four bits of address information are decoded into various enable lines for both the front panel board and the keypad board.

## Status Port

Three inputs concerning the status of some touch-screen related hardware (INTEGRATE, ADCBUSY, RAIL) are enabled on the data bus when the address decoder asserts STATUS.

INTEGRATE asserted indicates that an integration is in progress and ADCBUSY indicates that a conversion is in progress. RAIL indicates that the integrator has reached the limit at which the A/D converter will overflow, causing the current integration to abort.

## Configuration Register

The 68008 writes to the configuration register. The outputs are BEEP, which drives the instrument's beeper and various lines that control touch screen operation.

## Control Knob Encoder

The control knob is mounted on the keypad board and transmits two bits of gray-code data to the control knob block. Because these gray-code bits are 90° out of phase, the direction of knob travel can be determined. The encoder produces 50 pulses per 360° rotation of the control knob, and therefore 200 transitions/counts per revolution. An encoder PAL and an eight-bit up/down counter converts each 360° clockwise rotation of the control knob into 200 counts up and each counterclockwise rotation into 200 counts down. The count is enabled on the data bus by KNOB0.

## Driver

An oscillator in the driver produces a 199 kHz square wave called CLK200. CLK200 is used by the A/D converter, control knob encoder, and the integrate timer on the display memory board.

A 199 kHz sine wave output from the same oscillator drives a power amplifier that delivers a 6-volt peak sine wave to the input of a transformer. The center-tapped output of the transformer provides an in-phase and out-of-phase component of the driver output used in determining the location of a touch to the touch screen.

## Synchronous Demodulator

The synchronous demodulator converts ac at the center tap of the transformer to double-ended dc. A diode clamp in the synchronous demodulator provides static protection for the VM700A's internal circuitry.

## Integrator

When the screen is not being touched the integrator converts the double-ended output of the synchronous demodulator to a single-ended output, then integrates the signal for 20 milliseconds. The conversion and integration provides noise reduction and gain to the small voltage present. The signal is scaled and offset so the output from the integrator varies between 0 and 5 volts dc, the range of the A/D converter.

## Overflow Detector

The overflow detector monitors the output of the integrator. If the integrator output is outside the 0 to +5 volt dc range, the overflow detector generates the RAIL signal. This indicates the current integrate cycle should be terminated, as the signal would be outside the range of the A/D converter.

When the overflow detector generates the RAIL signal, firmware controlling the integrate timer on the display memory board reduces integrate time by half. This reduces the output of the integrator to within the A/D converter range. Firmware then multiplies A/D converter output by two (as many times as it was halved) to determine actual current through the touch screen.

## A/D Converter

The A/D converter transforms the 0-5 volt dc output of the integrator into a 10-bit digital word. CONVERT starts the conversion process and READADC places the converted output on the data bus. Both are asserted by the address decoder. During conversion the A/D converter sends ADCBUSY to the status port. ADCBUSY prevents enabling the converter's output before it completes a conversion.

## Multiplexer

The multiplexer handles the complex switching of the in-phase and out-of-phase outputs of the transformer to the left, right, top, and bottom of the touch screen. For a brief discussion of touch screen operation see the section titled *Touch Screen Fundamentals*.

To protect VM700A circuitry from static discharge 24 pairs of clamping diodes are tied directly to the lines coming from the touch screen.

The multiplexer also drives an LED that indicates the state of the touch screen by its flash frequency. A 2 Hz flash rate indicates the touch screen is attempting to restart, but can't bring the balanced modulator (transformer) into balance. A 10 Hz flash rate indicates normal operation with no one touching the screen. When the touch screen is touched, the LED glows steadily (actually, it flashes at 50 Hz).

### Auto-Null Circuit

Component variances typically cause the balanced modulator to be unbalanced when the screen isn't touched. The Auto-Null circuit performs a coarse balance on the balanced modulator (transformer) by applying a variable capacitance to its out-of-phase side. The 68008 microprocessor drives an 8-bit DAC, whose output varies the charge on the capacitor. Fine balance of the balanced modulator is provided by firmware.

### Touch-Screen Fundamentals

The touch screen and the transformer in the driver block (see the previous discussion titled *Driver*) form a balanced modulator. With no pressure on the touch screen, the center tap of the transformer is at 0 volts. A finger touching the screen upsets the balance and current flow through the finger is sensed at the transformer center tap. The synchronous demodulator converts the current to a voltage, and then demodulates the voltage by multiplying it by the output of the driver block. The result is a voltage proportional to the current through the finger. This measurement is taken four times to determine the X and Y coordinates of the touch.

Because certain factors vary the amount of current flow through the finger (touch pressure and location, moistness of skin), two Z-axis measurements (one for X,ZX and one for Y,ZY) are taken to determine the amount of current flow for the touch, independent of its position. These are factored into the X and Y readings to obtain the absolute coordinates of the touch. The complex switching required to make these readings is performed by the multiplexer (see the previous discussion titled *Multiplexer*).

## KEYPAD BOARD (A10A2)

The VM700A front-panel push buttons, LEDs, and the control knob are connected to the keypad board. The keypad board is connected to the front panel board through a flex cable that carries power, the 68008 data bus, enable signals from the front panel board's address decoder, and two bits of data from the control knob. Figure 5-12 shows the keypad board.

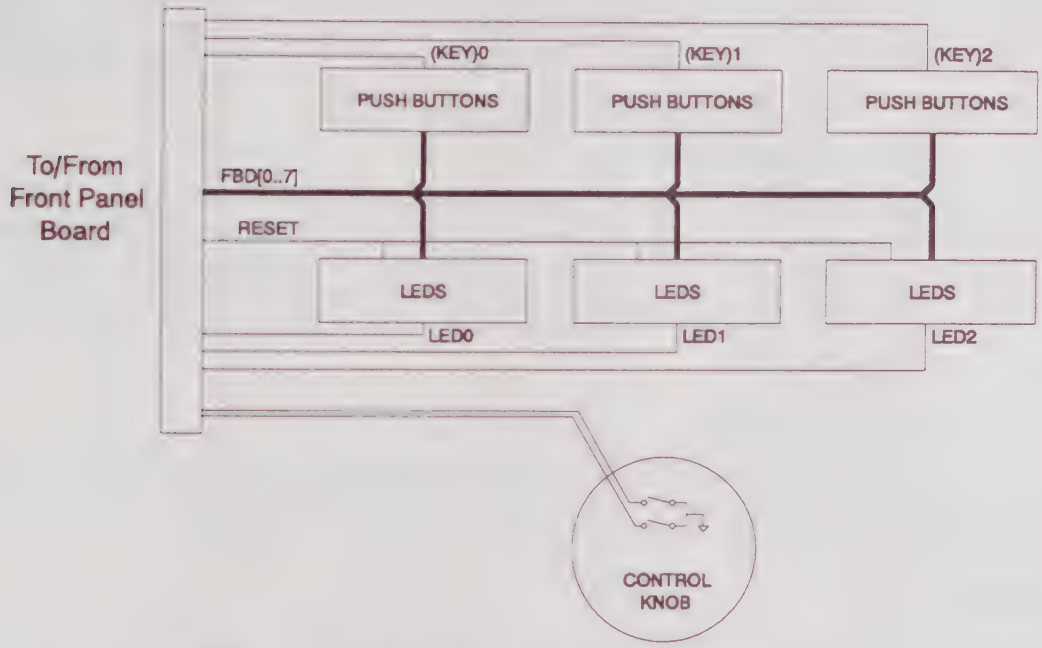


**Figure 5-12. Keypad board (A10A2) block diagram.**

## Control Knob

The control knob is a mechanical switch with conductive plastic contacts. One terminal of the switch is grounded and the other two lines are connected to circuitry on the front panel board that decodes the knob's output.

## Push buttons

The front panel push buttons are momentary contact, single-pole, single-throw switches divided into two groups of eight and one group of four. The push buttons drive three 8-bit buffers, which are read by the 68008 (enabled by KEY[0..2]). Firmware provides contact debouncing.

## LEDs

The front panel LEDs are driven by three 8-bit latches. The 68008 writes bit patterns into the latches, turning on the appropriate LEDs.

# DATA ACQUISITION/CONTROLLER BOARD (A18)

The combined Data Acquisition/Controller board (A18) is a direct hardware replacement for the two separate boards (A7 Data Acquisition and A8 Controller) used in earlier VM700A instruments. The new board is installed in all new manufactured VM700As. It may also be retrofitted in previously manufactured instruments as hardware upgrades are installed. When A18 is installed, it is nominally placed in the board slot previously used for the Controller board (A8).

## ACQUISITION INTRODUCTION

The acquisition portion of the board is a programmable data interface between the ADC board and the CPU microprocessor. ECL-level data from the ADC board is sent to the ECL-TTL converter then passed to the data acquisition section. The controller state machine can be programmed to recognize data sequences and generate signals to the data acquisition section, telling it when to perform various tasks. Figure 5-13 shows a block diagram of the data acquisition section of the Acquisition/Controller board.

### Video Data and Clock Inputs

Data from the ADC board enters the Acquisition/Controller board via J1, a 34-pin connector. The inputs are differential ECL-levels, and the inputs are terminated by 100 Ω resistors. ASYNC-SET and SYNC-RESET are outputs controlling the ADC board.

### FIFO/Demultiplexor

The FIFO (first in/first out) consists of register files U59 and U70 and a controlling device U60. The controller makes the synchronous register files (U59 and U70) behave as a FIFO file.

**Acquisition Data In.** This video data bus input is fed into the inputs of both U59 and U70, and written to the address set on WA0-3 bus on a CLK rising clock edge if /WE is low. The write enable, /WE, for both U59 and U70 is driven from WC1 a divide-by-2 counter in U59. The WC0 output from U59 provides the /WRITE signal to U60.

**Acquisition Clock.** If the data and /WE and WA0-3 are stable 8 ns before and 2 ns after the rising edge of this clock, register files U59 and U70 will behave correctly.

**Acquisition Data Bus.** This bus may be driven and read by many devices in the acquisition section. Mostly, data is read from the FIFO register files (U59 and U70) into the static RAM (U71-U86).

**Clock In.** This master clock input (RCLK on U60) increments the FIFO read pointers in U60. All occupancy signals output from U60 are timed from this clock (synchronized on the rising edge).

**Occupancy Out.** This collection of signals gives the Acquisition Control section information about whether the FIFO register files are empty, half-full, or have overflowed.

**Control In.** These signals (from Acquisition Control) dictate when to increment the read pointers, and when to clear the FIFO. Also, the output enable (OE) signal on U59 and U70 controls enabling the register files onto the acquisition data bus.

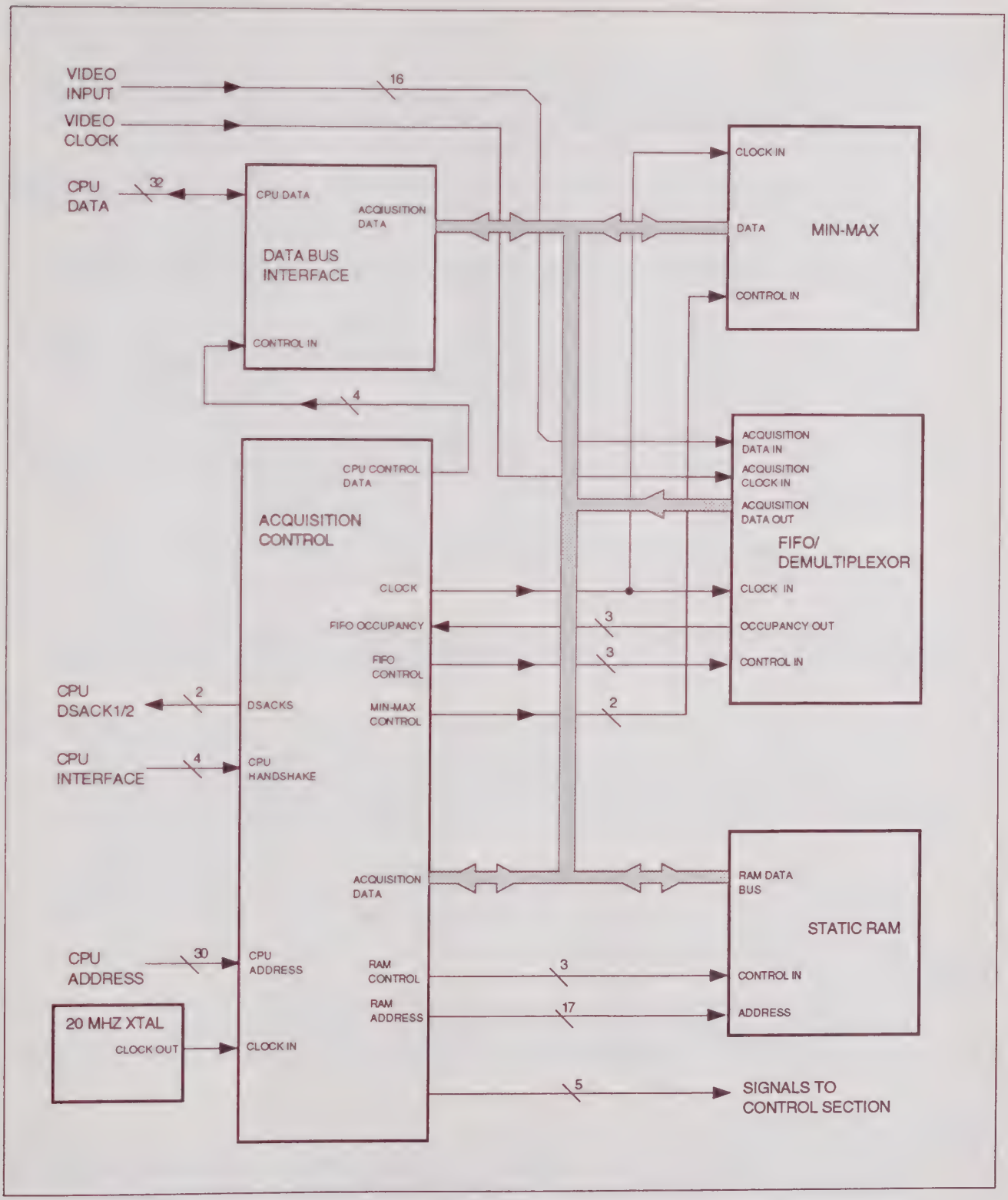


**Figure 5-13. Acquisition circuitry block diagram.**

## Acquisition Control

This block consists of U58, DL62, and U63. It is the control and timing center of the Acquisition system. It handles static RAM access arbitration, CPU dual-porting, state-machine instruction interpretation, CPU handshaking, the real-time control, FIFO control, Min-Max control, static RAM control and address sequencing for these RAM.

**CPU Handshake.** The CPU handshake is handled in U58, which takes in all the CPU controls signals (/AS, /DS, R/W, /SYSRESET) and the board address (/BDSEL) decoded from U63, and signals back to U63 when to generate DSACKS

**CPU Control Data.** These four signals control latching of data into bidirectional latches U64 through U67. They enable the latched data either to the CPU data bus or the acquisition data bus.

**FIFO Occupancy.** These signals from U60 (S3, S4, and S5 on pins 5, 6, and 14 respectively) in the FIFO tells Acquisition Control U58 to disable CPU accesses to the static RAM when the RAM is too full and to resume accesses when the FIFO is empty. The S3 signal tells the CPU that the FIFO is half full and S4 tells the CPU that the FIFO has data (one or more). If a FIFO overflow occurs (STATUS3, S5), an interrupt to the CPU is generated. The overflow condition should never occur.

**FIFO Control.** The FIFO Control signals control the output of data in the FIFO register files onto the Acquisition Data bus. They clear the FIFO when needed and increment the FIFO read pointer as the FIFO data is output.

**MIN-MAX Control.** These signals control when to allow data to be read by the Min-Max application specific integrated circuit (ASIC) device and when to read and/or clear data accumulated by the Min-Max ASIC.

**RAM Control.** The RAM control signals timing of the static RAM /CS (chip select) strobe, the /WE states for DATA (0 – 27), and the /WE for DATA (28 – 31). DATA (28 – 31) carry the acquisition state machine instructions.

**RAM Addresses.** The Acquisition Control section is also an address sequence generator for acquisition storage address control. It also passes the CPU address in a CPU access cycle.

**Acquisition Data.** This port takes in data from the acquisition bus as addresses used in GOTO looping instructions or interrupts, and outputs real-time control signals or temporary register contents.

**Signals to Control Section.** These signals are used to establish when an acquisition or a part of an acquisition is completed. A FIFO overflow, if one should ever occur, and the main controller clock from DL62 are part of the information grouped in these signals.

## Acquisition Clock

The acquisition control clock circuit, Y1, is a TTL-output compatible crystal oscillator running at 20.000 MHz. Various delayed versions of it are derived by DL62. The clocks are used in the acquisition ASIC (U58) for accurate timing of the control activities. One clock output is fed to the controller section.

## The Data Bus Interface

Because the Acquisition/Controller board has it's own 20 MHz clock, it is independent of the 68020 microprocessor; the CPU microprocessor interface is asynchronous into the acquisition section of the board. One advantage of this independence is that if different microprocessor clock rates are used, it doesn't affect the operation of the acquisition circuitry as long as the bus timing requirements are met. The data bus interface controls connection between the CPU data bus and the acquisition data bus to allow static RAM accesses.

## Data Acquisition Memory (Static RAM)

The acquisition memory consists of 16, 64 K x 4 bit fast (25 ns or lower access times) static type RAM in two rows of eight devices, with 17 total address bits and 32-bit wide data bus. The acquisition controller selects one of the 2 banks of 8 static RAM (U71 – U78 or U79 – U86) by decoding the most-significant bit of the address bus in U87.

## Min-Max ASIC

The min-max ASIC (U61) keeps a running record of the minimum and maximum video data read from the FIFO, as well as latching whether a line or frame pulse or an over- or under-flow has occurred. Reading the Min-Max results resets the circuit to begin a new accumulation.

# CONTROLLER INTRODUCTION

The controller portion of the board performs these functions:

- Controls the VM700A's analog front end
- Receives and processes digitized data from the ADC board and passes it to acquisition memory
- Controls acquisition patterns

Figure 5-14 shows a block diagram for the controller circuitry.

## Bus Buffers

All 32 data lines and the required control and address lines from the system bus are buffered on this board. Many of the data and address lines are buffered on the board a second time before being used to drive multiple devices.

## Controller ASIC

The majority of the control logic and high speed logic functions are incorporated into the controller ASIC (application specific integrated circuit). The controller now has new functionality for DVM and clamp gating. The controller handles CPU interfacing, DVM and clamp counter gating control, bus routing control, DVM counting, and some of the buffers that handle data flow.

## Address Decoding

Address decoding is handled by GAL U63 as is the decoding for the Acquisition section of the board.

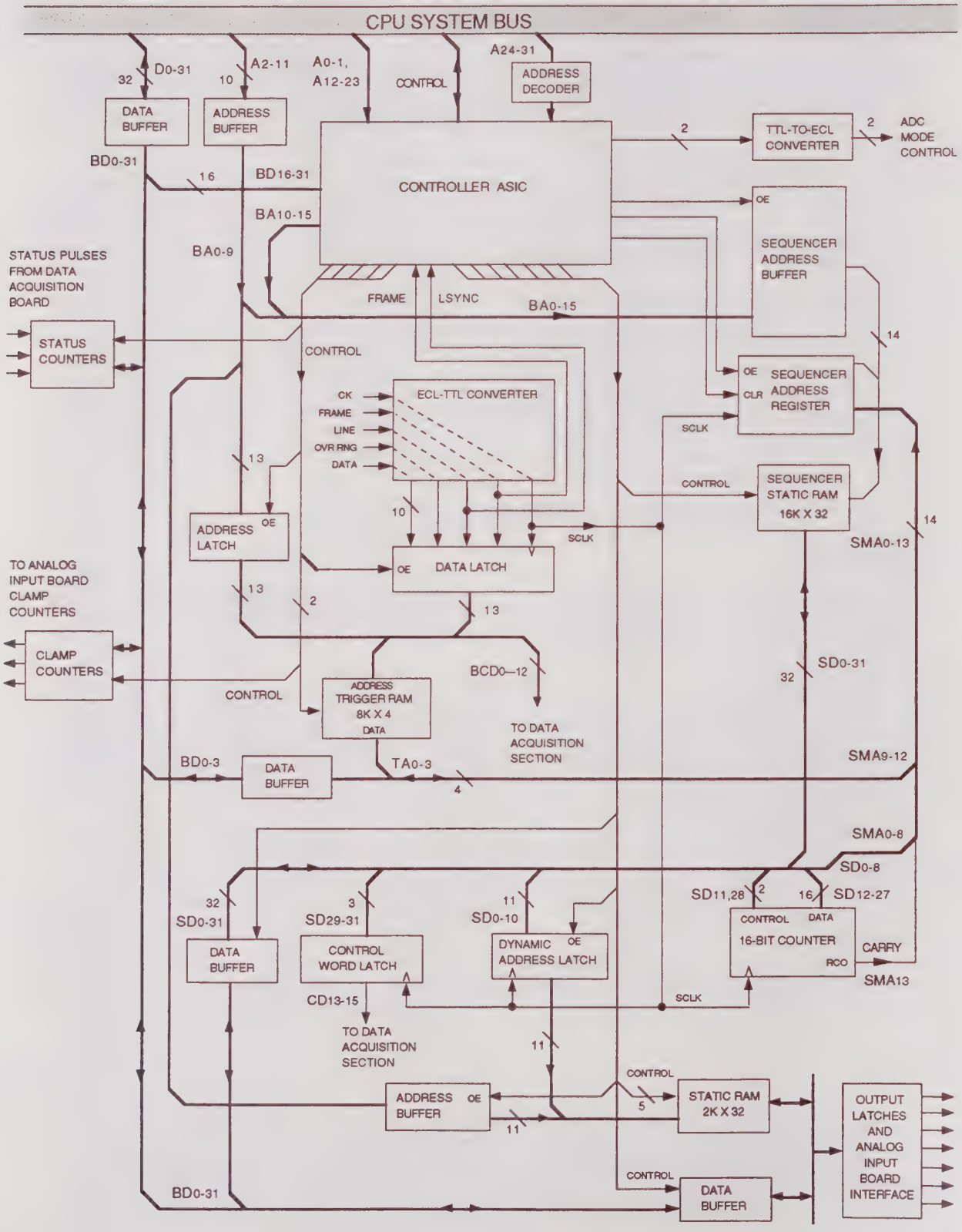


**Figure 5-14. Controller section block diagram.**

## Output Latches and Analog Input Board Interface

This block (U54, U55, U52 U53, and U56) controls the dynamic gains, offsets, input selections, and dither. The dither counter is implemented in PAL U56 and octal D flip-flop U53. The output signals from this block are fed directly to the Analog boards in the top compartment of the instrument. They perform the following actions:

- Enables the controller board DVM block in U8.
- Loads four control registers within U8 (the mode control and DVM selection blocks)
- Latches 12 (as 8 + 4) bits of data into the calibration DAC (located on the analog input board) via U26 (controlled from U8).
- Loads 8 bits of data into each register of the bias and clamp level octal DAC (located on the analog input board) via buffer U26 and the controlling signals from U8.

## Clamp Counters

Sixteen patterns, selected by the four bits from the control register, are stored in U8. The selected pattern provides gating for input signal clamping and the DVM. The gating information drives a triple timer/counter, U6. The ATRIG, BTRIG, and CTRIG outputs from the triple-timer/counter drive a one-shot multivibrator on the analog input board. Trigger pulses are generated for each line where clamping is to be applied. These pulses determine the point on a line where clamping begins; other control lines on this board control circuitry on the analog input board that sets the clamp level and duration.

## Status Counter

The triple-timer/counter, U7, counts status pulses from the acquisition section of the board. The status pulses may be used by applications to indicate events occurring in an acquisition pattern.

## ECL-To-TTL Conversion

The differential ECL signals from the ADC board (D0 - D9, FRAME_OUT, LINE_OUT, CKD, and OVERRANGE) are converted to single-ended TTL outputs by U9, U10, U11, U12, and U13 before being used by the Acquisition/Controller board. A TTL-to-ECL conversion of OLS and PSR from U8 to ECL levels is done via U19. These signals (Sync Reset and Async Set) control the modes of the ADC board so that it either outputs all ones or zeros or does conversion operations.

## Data and Address Latches onto the $BCD_{0-12}$ Bus

The data from the ADC board are latched into the data latches (U15 and U16) and clocked out by SCLK, re-synchronizing the data to the clock signal. Controller ASIC U8 loads address latch U20 with 10 bits of address. Three additional bits ($BCD_{13-15}$) are added from U8 to complete the address. Bits from the control register, /RUN and /STOP, can switch the trigger RAM input from data latch output (normal operation) to address latch output. Switching the trigger RAM input to the output of the address latch allows the CPU microprocessor to access the trigger RAM. The microprocessor then writes a 4-bit pattern into the trigger RAM through a 4-bit enable buffer, U18.

The 13 bits (10 bits of data plus over-range, FRAME, and LSYNC) are sent to the trigger RAM and and to the data acquisition sections of the board.

## Trigger RAM

The trigger RAM (U17) performs the actual word recognition. When the microprocessor writes an appropriate 4-bit wide pattern into the trigger RAM (from the 4-bit enable buffer, U18), the four output bits change when certain ranges of input data (identified by bit pattern) occur. The output is four bits of the 16-bit input to the sequencer.

Input data that could be programmed in U17 to trigger sequences may include sync, tape dropout, zero-carrier pulses, etc.

## Sequencer (State Machine)

Sequencer outputs drive the dynamic settings circuitry and send control bits to the data acquisition board. These control bits cause the program counter on the data acquisition board to jump to preset addresses.

As with the word recognition circuitry, the sequencer's static RAM is loaded with program information from the CPU microprocessor. A bit from the control register (SRUN) in U8 enables address and data buffers of the system bus to have access to static RAM.

### Sequencer Address and Data Buffers (U27, U8, and U22 – 25)

When the address buffer is enabled, the sequencer static RAM can be read and written by the microprocessor from the data buffer before starting the sequencer.

### Address Register

The normal input to static RAM is the 16 bits from the sequencer address register (U28 and U29). The four TRIG bits, the 16-bit counter CARRY bit, and 11 bits (out of 32) from the output of static RAM comprise the 16-bit input to the register. The TRIG bits are the output of trigger RAM. The 11 address bits are the 11 LSBs from the output of the sequencer static RAM that are also fed through an address latch, U41 and U42, to the dynamic settings static RAM as its normal input (nine of these address bits are used in current hardware; the other two are reserved for future expansion.)

### Static RAM

The 32-bit word output of the static RAM memory block (U30 – U37) goes to a number of circuits when the sequencer is running. Eleven bits of the output are fed to an address latch. The same 11 bits are also routed to the address register as the program counter. Sixteen bits of the output are fed as data to the 16-bit counter, while two more bits provide counter control. Three other of these bits provide signalling to the acquisition section of the board.

### 16-Bit Counter

Sixteen of the 32 bits output by the sequencer static RAM are used as data by the 16-bit counter (U38 and U39). The two control bits determine the count direction and whether the counter is to be loaded with the 16 data bits or is to hold the current count. When the counter overflows, the CARRY bit is returned to the address register. The CARRY bit can be used to count samples, lines, frames, or whatever the application needs to count.

### Dynamic Address Latch

The 11 bits received by this address latch (U41 and U42) are clocked through to the dynamic settings static RAM (U44 – U47). These are the same 11 address bits that are returned to the address register from the output of the sequencer static RAM, but delayed one clock cycle.

### Control Word Latch

The control word latch (U43) holds a three-bit control word issued to the data acquisition section of the board. These control bits cause the program counter in the data acquisition section of the board to jump to preset addresses.

## Dynamic Settings

This circuitry sends additional front-end control data to the Analog Input, Genlock, and Filter Switch boards. The key requirement for this block is that its outputs must be able to change rapidly, because offset, gain, dither, input selection, and filter selection may change many times during a single line of video.

The dynamic settings static RAM (U44 – U47) can be accessed by the 68020 anytime, even during an acquisition. The same control bit (SRUN) that disables the sequencer static RAM determines if the microprocessor access requires synchronization.

### Dither Generator

Six of the eight bits sent to the dither generator implemented in U53 and PAL U56. These six bits are used as data; the other two are for control. The dither generator's four control states are:

clear,

sequence to the next dither level,

hold the current level, and

load a custom six-bit dither value.

Figure 5-15 shows the dither generator's pre-defined, built-in dither waveform sequence.

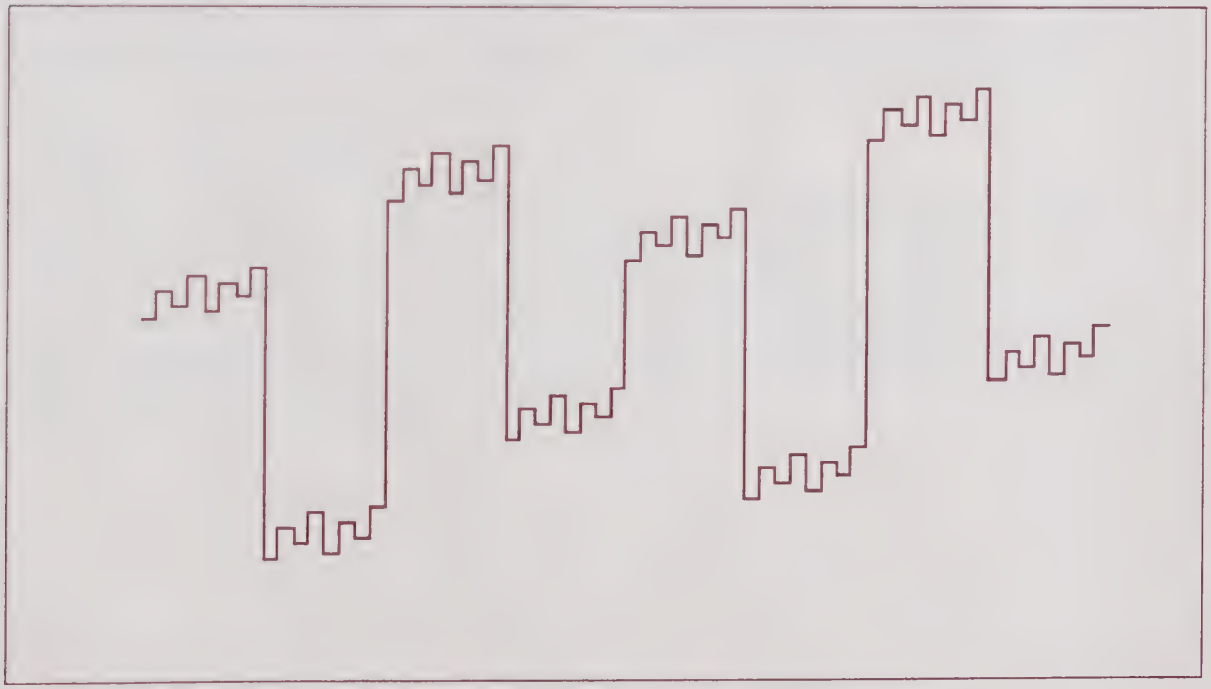

**Figure 5-15. Dither generator's 64-step dither waveform.**

### Address and Data Buffers

When the dynamic settings address buffer is enabled, the CPU (a 68020) can read or write the dynamic settings static RAM from the dynamic settings data buffer (U48 – U51). This can occur while the sequencer is running. Address buffers for the CPU access are implemented by U57 and part of U8.

### Dynamic Static RAM

The CPU (68020) can be given access to the dynamic settings static RAM or the static RAM addresses may be connected to the 11-bit output from the sequencer address latch. The 11-bit output from the sequencer allows for different dynamic output settings for each step of the sequencer program.

### Output Latches and Analog Input Board Interface

The 32 bits of output latches are divided this way:

- Eight offset bits
- Eight gain bits
- Eight bits to drive a dither generator
- Three bits of input selection control
- The CPHASE bit inverts the clock phase on the genlock board to allow sampling midway between previous samples.
- Four bits control filter selection on the A4 filter switch board

Microprocessor access is also a multiplexed operation.

The DSACK generator within U8 provides the rapid signal generation needed for a minimal number of CPU wait states. This DSACK generator is much faster than the DSACK generator in the interrupt controller.

## POWER SUPPLY (A15)

The new power supply assembly is a Tektronix-made module that is a direct replacement for the OEM power supply assembly previously supplied. It is completely compatible with all previous VM700 and VM700A instruments, mechanically and electrically, and may be used as a repair replacement for the OEM power supplies.

The new supply is an inverter switching supply composed of a primary rectifier, the inverter switching circuit, 12 V and 15 V regulators, alarm sensing circuitry that monitors for overvoltage, overcurrent, and over temperature conditions, and the alarm logic circuitry that shuts down the inverter switching circuitry in the event of a problem. A simplified block diagram is shown in Figure 5-16.

## BLOCK CIRCUIT DESCRIPTION

### Input Power Rectifier

The Input Power Rectifier receives the mains ac voltage and rectifies it to provide the drive power to the inverter switching circuitry. A line voltage switch sets the supply to operate on a nominal voltage of either 115 Vac or 230 Vac. On 230 V operation, the primary rectifier acts as a full-wave bridge rectifier; for 115 V operation, the primary rectifier is configured as a full-wave voltage doubler. The primary bridge rectifier is protected by the mains line fuse and surge suppressors. A mains line filter at the input of the power supply reduces conducted and radiated EMI from and to the VM700A. Additional components in the rectifier output provide line filtering and common-mode noise rejection for further reduction of conducted electromagnetic interference. Input surge current and overvoltage protection components are included in the input rectifier circuit to prevent major component damage in the event that incorrect line voltage is applied to the ac input.

### Housekeeping Power Supply

A second power supply provides the housekeeping (or keep-alive) power source. This supply provides power to the logic circuitry that controls the power supply STBY/ON logic circuitry. It is supplied via a transformer that is wired with the power line switch to provide the correct voltage to the primary for either line voltage. The rectifier for the housekeeping supply is full-wave and its output is capacitive filtered. The secondary voltage is regulated by a 3-terminal regulator. Both sides of the transformer secondary are fused with self-healing fusing devices. One of the sensing signals (LINE SENSE) to the power supply logic circuitry is developed from the secondary of the housekeeping supply transformer.

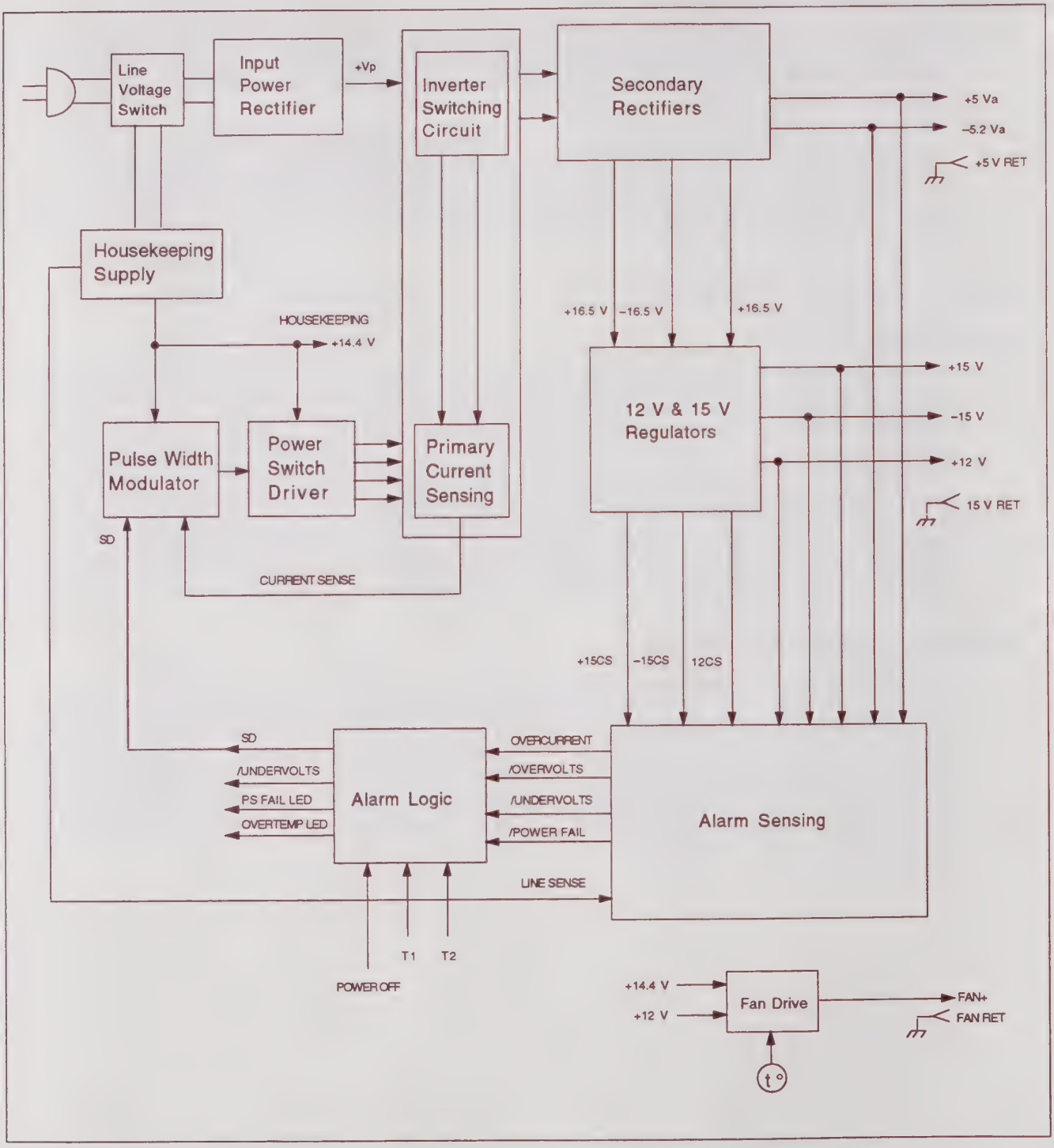


**Figure 5-16. Simplified block diagram of the power supply.**

## Inverter Switching Circuit

This circuitry comprises the Pulse Width Modulator, the Switching Transistor Drivers, the Switching Transistors, and the Secondary Rectifiers and Filters.

Secondary outputs of the power transformer are full-wave rectified and filtered to provide +5 V, –5 V, +16.5 V, and –16.5 V. The +16.5 V and –16.5 V are further regulated to produce the +15 V and –15 V supplies to the VM700A and the +12 V display module power. The source voltage for the Fan Drive circuit is also provided by the +12 V supply.

## +12 V and 15 V Regulators

The +12 V and the + and –15 V regulators are similar in operation. The +12 V regulator is operating with more head room than the + and –15 V regulators, and the circuitry is modified to adjust for that difference. Each regulator is a combined operational amplifier and FET current pass element with a feedback loop to the operational amplifier from the output voltage.

## Alarm Sensing

The Alarm Sensing circuitry looks at the various supply voltages to check for undervoltage, overvoltage, overcurrent, and power fail conditions. The status of these conditions are the signals fed to the Alarm Logic circuitry.

## Alarm Logic

Each of the Alarm Sensing outputs is monitored by the Alarm Logic circuitry. That circuitry also monitors the temperature sense signals. Depending on the state of the sense signals, the Alarm Logic circuitry can issue a shutdown signal (SD) to the Pulse Width Modulator to stop the power supply from operating. The Alarm Logic circuitry also drives the Over Temp LED and PS Fail LED front-panel indicators as feedback to the user of the existing problem.

## Fan Drive

A separate Fan Drive circuit provides a temperature related drive voltage to the Fan. As the temperature rises, the fan is driven faster to compensate for the rise. The temperature sensing element for the voltage control is mounted on the 5 V power supply heat sink.

## DETAILED CIRCUIT DESCRIPTION

The power supply is a current-mode controlled, multiple output inverter operating at a frequency of 100 kHz. The inverter is driven by a preregulator. The outputs are regulated by pulse-width modulating the preregulator. The power supply is monitored for undervoltage, overvoltage, overcurrent, and over temperature conditions. Use diagrams 1 and 2 for assembly A15 to follow the detailed circuit description.

### Input Power Rectifier

The AC mains voltage is applied to the input power rectifier through a Line Filter (FL1), Fuse F1, and the Master Power Switch (S1) on the rear panel of the instrument. A bleeder resistor, R1, is placed across the input filter to discharge the filter capacitors when ac power is removed. The inrush of turn-on current is controlled by surge suppressor RT1, and RV1 and RV2 protect the input circuitry from a major overload in the event that an incorrect mains voltage is applied when the power supply is set to operate on 115 Vac. A spark gap device, E3, also acts to protect the circuitry that follows it by firing and causing the input fuse to open in the event of a major overvoltage.

#### 115V/230V Switching (S2)

The Line Selector switch, S2, converts the power supply from a bridge rectifier for 230 V operation to full-wave doubler for 115 V operation.

When the Line Selector is set for 230 Vac operation, diode bridge CR1 is a conventional bridge rectifier. For 115 Vac operation, the top 2 diodes of CR1 and filter capacitors C3 and C4 act as a full-wave voltage doubling circuit. The rectified voltage is applied across both C3 and C4 on alternate half cycles of the input voltage. The output voltage is then taken across them in series so the output voltage is the sum of the voltages across each capacitor. Bleeder resistor R5, across the filter capacitors, drains the capacitor charge when power is removed.

A neon indicator, DS1, lights when the primary power is up. Common-mode EMI filtering of the rectified voltage is provided by L2, C6, C7, C8, C9, and C10. Resistors R8 and R9 provide damping for the inductance of L2. The output voltage for either 115 V or 230 V operation is approximately 300 Vdc.

The switching action of S2 also switches the primary winding of T1 to produce the same voltage output from the secondary winding for either line voltage position. For 115 V operation, the two primary windings are in parallel, and for 230 V operation the two windings are in series.

Jumper J13 may be pulled to disconnect the input rectifier from the switching power supply. This permits a service person to determine if the input rectifier circuitry is functioning correctly without the load.

**CAUTION**

*Jumper J13 is for testing purposes only. Troubleshooting should be attempted only by an experienced service person.*

### Pulse-Width Modulator and Control Circuits

PWM U8 is a pulse-width modulated, current-mode controller that drives the preregulator stage. The preregulator is controlled by the output of the +5 V supply. This make +5 V the regulated output; the other voltages (–5 V, –16.5 V, and +16.5 V) are set by the turns ratio of T2. The PWM uses the +5 V output voltage and information about the current in L3 to control pulse-width modulation of the preregulator. On pins 8 and 9 of U8, C39 and R18 set the frequency of operation at approximately 100 kHz. Pin 2 of U8 is a +5 V ± 5 mV voltage reference.

The +5 V output of the supply is divided to 2.5 V by R41 and R42 and applied to the error amplifier that is internal to U8 at pin 6 (– pin). Pin 5, the + pin of the error amplifier, is the reference voltage for the error amplifier. The regulating point for the +5 V output is set by R39, a variable potentiometer, that adjusts the reference voltage on pin 5. Compensation and feedback for the error amplifier is provided by R50 and C42.

The current information from L3 is applied as a trapezoidal-type waveform to U8 at pin 4. Transistor Q13 adds a small portion of the timing ramp on pin 8 to the current signal at pin 4 to improve noise immunity and to set the PWM correctly for current-mode operation. Both these signals, the +5 V feedback at pin 6 and the current signal with the added ramp at pin 4, must be present for U8 to work properly.

A shutdown signal, SD, applied to pin 16 of U8, is used to turn off the Pulse-Width Modulator. The SD signal is developed by the Shutdown Gate, U26B, in the Alarm Logic circuitry. The signal is high when the power STBY/ON switch is in STBY and for a number of irregular conditions of the power supply (overvoltage, over temperature, or overcurrent).

**CAUTION**

*Jumper J10 is for testing purposes only. It may be pulled to eliminate the SD signal for testing of the PWM during troubleshooting, but this also eliminates all the shutdown control by the control logic circuitry. Troubleshooting should be attempted only by an experienced service person.*

By design, the voltage level required to shut off the PWM is low compared to the high logic level from the Shutdown gate. A diode clamping circuit formed by R43 and CR17 prevents the SD level from exceeding the forward bias drop of the diode, about 0.6 V. Capacitor C43 bypasses fast transients from the SD input.

## Power Switch Driver

The pulse-width modulated outputs of PWM U8 are at pins 11 and 14. The output pulses are buffered by the high-current FET driver device, U11, whose output pins 12 and 13 drive the primary of T4. The secondaries of transformer T4 drive the gates of the pulse-width modulated switching FETs, Q8 and Q10.

The leading edges of the pulses from U8, pins 11 and 14, are also used to trigger comparator U7A. The comparator output clocks U10A, a D-type flip-flop configured as a toggling circuit that changes state with clock. This circuit is used to derive the 50% duty cycle pulses which are also buffered by U11. These outputs drive the primary of T5 which, in turn, drives the gates of inverter switching FETs Q2 and Q3.

## Inverter Switching Circuit

### Preregulator

The preregulator consists of T4, Q8, Q10, L3, CR9, C23, and C24. Parallel FET transistors, Q8 and Q10 are driven alternately, each at a 50 kHz rate. The gates of Q8 and Q9 are driven by the Pulse-Width Modulator (PWM), U8, through FET driver U11 and pulse transformer T4.

### Current Sensing

Transformer T3 and transistors Q11 and 12 form a current sense circuit that functions to sense the current in the step-down inductor L3. This circuit provides a scaled-down replica of the switching FET current to pin 4 of PWM U8.

### Inverter

The inverter consists of T2, Q2 ,and Q3. FET transistors Q2 and Q3 are also driven alternately, each at 50 kHz, and provide a 50 kHz switching rate to the primary of T2. They are not pulse-width modulated, but driven at a 50% duty cycle, through pulse transformer T5. Drive to the pulse transformers, T4 and T5, is supplied by U11, a high-current FET driver device. The inverter is driven in a one-half bridge configuration. Capacitors C23 and C24 divide the full voltage at L3 by 1/2, and the voltage across each capacitor is alternately applied to the primary winding of transformer T2 through the switching action of Q2 and Q3. This configuration produces a self-correcting circuit action that equalizes the positive and negative voltage swings seen by the primary of T2 and keeps T2 out of saturation.

## Secondary Rectifiers and Filtering

The approximately 180-V, square-wave voltage across the primary winding of switching transformer T2 is stepped down in two center-tapped secondaries to provide drive to the ±5 V and ±16.5 V rectifier and filter circuits. The 16.5 V secondary has two + outputs developed, one to drive the +12 V Series-Pass Regulator and the other to drive the +15 V Series-Pass Regulator.

Each of the secondary output voltages is full-wave rectified and filtered using choke input filter sections. The +5 V output uses two L-sections; the others use a single L-section filter. A crowbar circuit on the –5.2 V output, composed of SCR Q130 and Zener diode VR130, will fire in the event of a problem with the regulating circuitry that causes an overvoltage condition to occur. If the –5.2 V exceeds about –6 V, the SCR, Q130 fires and loads the power supply to shut it down,

## +12 V and 15 V Regulators

The +12 V Series-Pass Regulator (U12A and Q16) and the +15 V and -15 V Series-Pass Regulators (Q17, Q19, Q18, Q20, U5, and U6) are very similar circuits.

### +12 V Regulator

This complete linear regulator circuit, operational amplifier U12A, and series-pass element Q16, may be viewed as an operational amplifier circuit with R64 acting as the feedback resistor and R65 as $R_{IN}$. The closed loop gain of the circuit is then set by the ratio of the resistor values. Operational amplifier U12A has its non-inverting input pin supplied via the feedback resistor from the output of the series-pass element (the regulated +12 V). A 5 V reference voltage developed by U5, a band-gap reference device, is applied to the inverting input of U12A, pin 2. The output level of U12A then follows the feedback voltage and is non-inverted at this point.

The inversion occurs in the series-pass element, a P-channel FET. With reduced loading of the supply, an increasing voltage from U12A decreases the conduction of the pass element, Q16, thereby reducing the output voltage. With more loading, the output voltage would tend to decrease, and the operational amplifier output also decreases. This increases conduction in the series-pass element to counter the decreasing output voltage by suppling more current to the load.

From pin 1 of U12A there is a frequency response limiting feedback circuit formed by C640 and R640 back to the inverting input of the operational amplifier, pin 2.

### + and –15 V Regulators

The + and –15 V regulator pass elements, Q17 and Q19, are complementary, with Q17 being a P-channel FET and Q19 an N-channel FET. In the +15 V regulator, which operates just like the +12 V regulator circuit, U6A is referenced to the +5 V developed by U5. Operational amplifier U6B is referenced to ground. In both, the feedback signal from the output voltage is still applied to the non-inverting input of the amplifiers. With reduced loading of the supply, an increasing voltage (more positive on the +15 V or more negative on the –15 V) decreases the conduction of the pass elements thereby reducing the voltage. With more loading, the output voltage would tend to decrease and the operational amplifier output will cause the pass elements to increase conduction to counter the decreasing output voltage.

### Overcurrent Sensing

Each of the regulators has a current sensing resistor and circuit to provide overcurrent information to the Alarm Sensing circuitry. In the +12 V regulator, that resistor is R63. The total current to the +12 V load passes through R63. Resistors R645 and R644 offset the emitter voltage of Q560 to a level that accounts for the nominal voltage drop across the sensing resistor, R63, and the diode drop of CR260. Diode CR260 in the base circuit of Q560 provides thermal compensation to the bias circuit . If the voltage drop across the resistor becomes excessive (too much current), Q560 becomes forward biased, and the high +12CS signal is applied to the Alarm Sensing circuitry. Like circuitry in the + and – 15 V regulators senses overcurrent in those supplies and produces the +15CS and –15CS signals to the overcurrent comparators in the Alarm Sensing circuitry.

## Alarm Sensing

### LED Indicators

LED indicators (DS2 through DS6) are placed on the input voltage side of the Power Supply Supervisor, U16. These indicators provide a quick visual check to see if the expected input voltages to U16 are present if troubleshooting of the power supply ever becomes necessary.

### Power Supply Supervisor

The Power Supply Supervisor, U16, monitors the power supply voltages and the LINE SENSE input. If any of the voltages do not meet the expected level (over or under), the Power Supply Supervisor outputs the appropriate alarm signal (/OVERVOLTS, /PWR FAIL, and /UNDERVOLTS). Each of the positive voltages is monitored on a separate input. A resistive voltage divider sets the input voltage at 2.5 volts. The – 5.2 and –15 V supplies are combined at the input to an internal inverter circuit. The output of the inverter circuit is then monitored at pin 14 of U16.

The LS input of U16, pin 5, monitors the LINE SENSE signal from the housekeeping supply. That line also has diode-OR'ed signals from the Shutdown Logic Gate input and the PWM regulation detector. Any of those signals going low causes the Power Supply Supervisor to output the /PWR FAIL signal to the main instrument to warn it that power failure is imminent.

The supervisor also develops a voltage reference from pin 3. That voltage is used for the reference voltage in the overcurrent comparators and the power reset comparator.

The width of the valid range (tolerance) of input voltages is set by the voltage on pin 1 (LTH) to be 8%.

### Power Reset Comparator

When the power supply is going down, it is important that the memory devices in the VM700A are not written with random data as the voltage decreases. There are two signals generated from the Alarm Sensing circuitry to aid in producing an orderly shutdown of the processor and memory

devices. These two signals are /PWR FAIL, a warning that the power supply is going down, and /PWR RESET, a signal that prevents further writing as the voltage continues falling to the off state. The /PWR FAIL signal is developed by the Power Supply Supervisor, U16, immediately as the power is turned off. The /PWR RESET signal is developed by comparator U20B as the voltage decreases to the point that an /UNDERVOLTS signal is generated by the Power Supply Supervisor. The time delay between the two events permits the processor to shutdown while the voltage level is still high enough to permit proper operation.

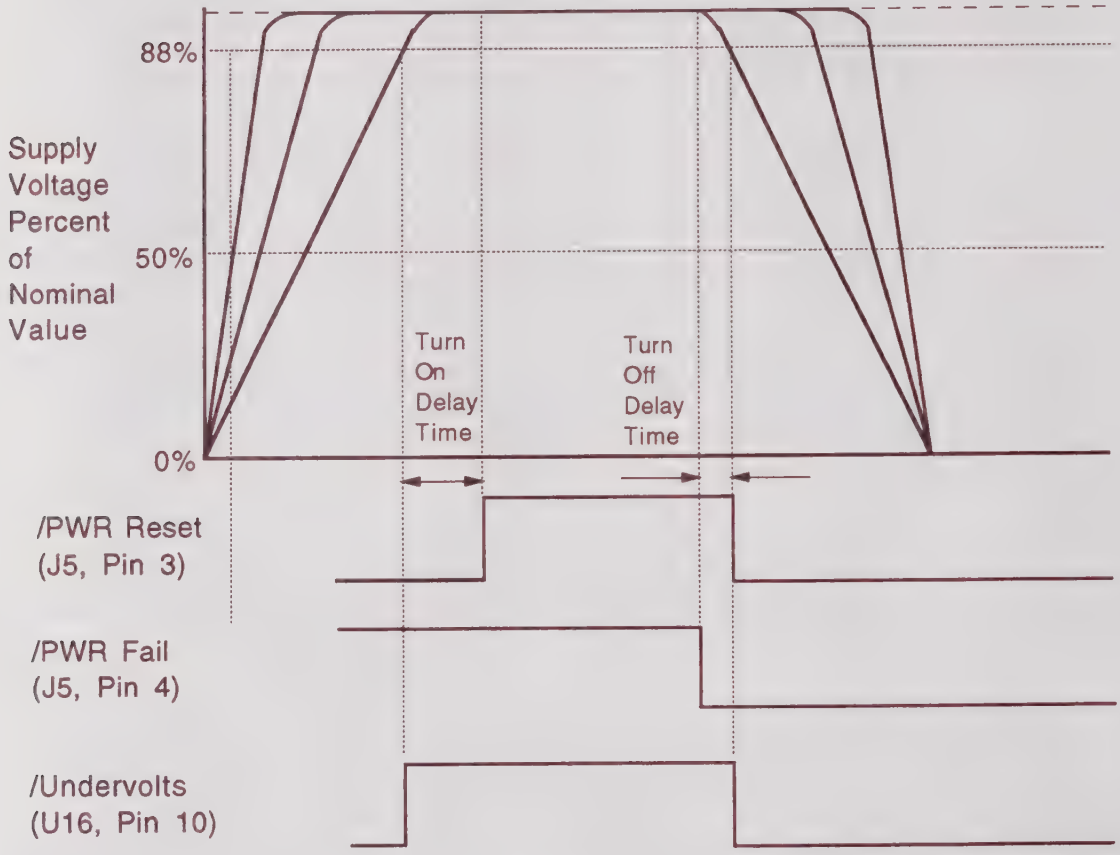


**Figure 5-17. PWR FAIL and PWR RESET timing.**

When the voltage is coming up, it is also important that the memory devices in the instrument are not written to randomly. The Power Reset Comparator has an RC timing circuit on its non-inverting input that prevents the /PWR RESET from going high for a period of time after the undervoltage condition is removed (see Figure 5-16). The delay permits the power supply voltage to stabilize before the processor is permitted to start operating.

### Overcurrent Comparators

The outputs of the + and –5 V overcurrent comparators (U21A and B) and the +12, +15, and -15 V overcurrent comparators (U30A and B) are diode-OR'ed together (through CR 46 – CR 50) to produce a single input to the overcurrent alarm logic circuit. Any individual supply that overcurrents will result in a shut down of the power supply through the shut-down logic circuitry.

The +12 and +15 V overcurrent comparator (U30A) and the –15 V overcurrent comparator (U30B) are referenced to the VREF output of U16, pin 3. The two halves of U30A and U30B are mirrored, so both comparator circuits produce a low output in an overcurrent condition of the monitored supply. The +12CS signal and the +15CS signal from the regulators are also diode-OR'ed at the input of

U30A by CR84 on the +15CS signal line and by CR88 on the +12CS signal line. These two signal lines are pulled down to ground through R85 when neither current sense signal is active. The –15CS signal line is pulled up to the +14.4 V housekeeping source through R87 when that signal line is inactive.

The + and –5 V overcurrent comparators take their inputs from both sides of the current sensing resistors in the supply outputs. The voltage difference is very small, so some conditioning circuitry is required to set up the correct comparator operation. These two circuits are also mirrors of each other. The –5 V circuit is described, but the +5 V circuit operates in the same manner.

The voltage across R28 in the –5 V supply (–5.2 $V_I$ to –5.2 $V_O$) appears across the input of U21B attenuated by R124 and R122. Capacitor C81, across the input pins to U21B provides noise suppression. Zener diode VR3 sets a voltage across R122 and R124 in series. That produces a voltage at the junction of R124 and R122 that is slightly higher (less negative) than the –5.2 $V_I$ input. (The –5.2 $V_I$ comes from the regulated supply end of the current sense resistor.) As load on the –5.2 V supply increases, the –5.2 $V_O$ side of the sense resistor becomes less negative, approaching the voltage level set on the non-inverting input of U21B. If the current rises to the point that –5.2 $V_O$ exceeds that level, comparator U21B switches to a low output and forward biases CR46 to send the overcurrent alarm to the alarm logic circuit.

## Fan Drive

The variable-speed fan is powered from a thermally controlled +12 to +30 V supply. A graph of the fan drive voltage versus the temperature is shown in Figure 5-18. Temperature sensing is done by RT5, a thermistor mounted on the 5 V heat sink. There are provisions for two additional temperature sensing elements in the main instrument, but those are not used at present. Thermistor RT5 has a negative temperature coefficient, so as the temperature rises, the voltage at the junction of R136 and RT5 decreases. When the temperature gets high enough that the voltage biases on CR51, the input to U24A begins to follow the temperature changes. The three temperature sense inputs are diode-OR'ed at the non-inverting input of U24A, a voltage follower operational amplifier. The highest sensed temperature controls the input to U24A by biasing off the diodes that have a higher voltage on their cathodes.

The output of U24A is summed with the voltage feedback from the output of the fan power supply. The feedback signal varies the output switching signal from U25, a Pulse-Width Modulator. Without the temperature feedback through R140, the feedback through R141 sets the output voltage to minimum, at about +12 V. The added temperature feedback modifies that provided from the fan drive circuit to vary the duty cycle of the drive signals to Q24 in proportion to the temperature. The output of U24A decreases as the temperature increases, so the feedback voltage at pin 2 of U25B decreases. This makes the Pulse-Width Modulator output turn Q24 on for longer periods of time to increase the drive voltage to the fan.

The Fan Drive circuit, composed of Q24, L13, CR56, and C91, is a boosted power supply to produce the variable drive voltage to the fan. The pulse width modulator and Q24 are powered from the +12 V supply, but the boosted voltage to the fan can be up to 30 Vdc. When Q24 conducts, energy is stored in the magnetic field of L13. As Q24 shuts down, the energy must be returned to the circuit. The voltage on the anode of CR56 increases due to the inductive rise and the diode is biased on.

The energy is rapidly transferred to C91 and CR56 becomes reverse biased to remove the inductor from the circuit. Until the next pulse of energy from L13, the stored charge of C91 supplies the drive voltage to the fan. The Pulse-Width Modulator and feedback circuit controls the fan drive voltage within a range of +12 to +30 Vdc. If Q24 remains off, the voltage on C91 will reduce to below the +12 V supply and CR56 will again become forward biased through L13, so the minimum output drive voltage to the fan is approximately +12 Vdc.

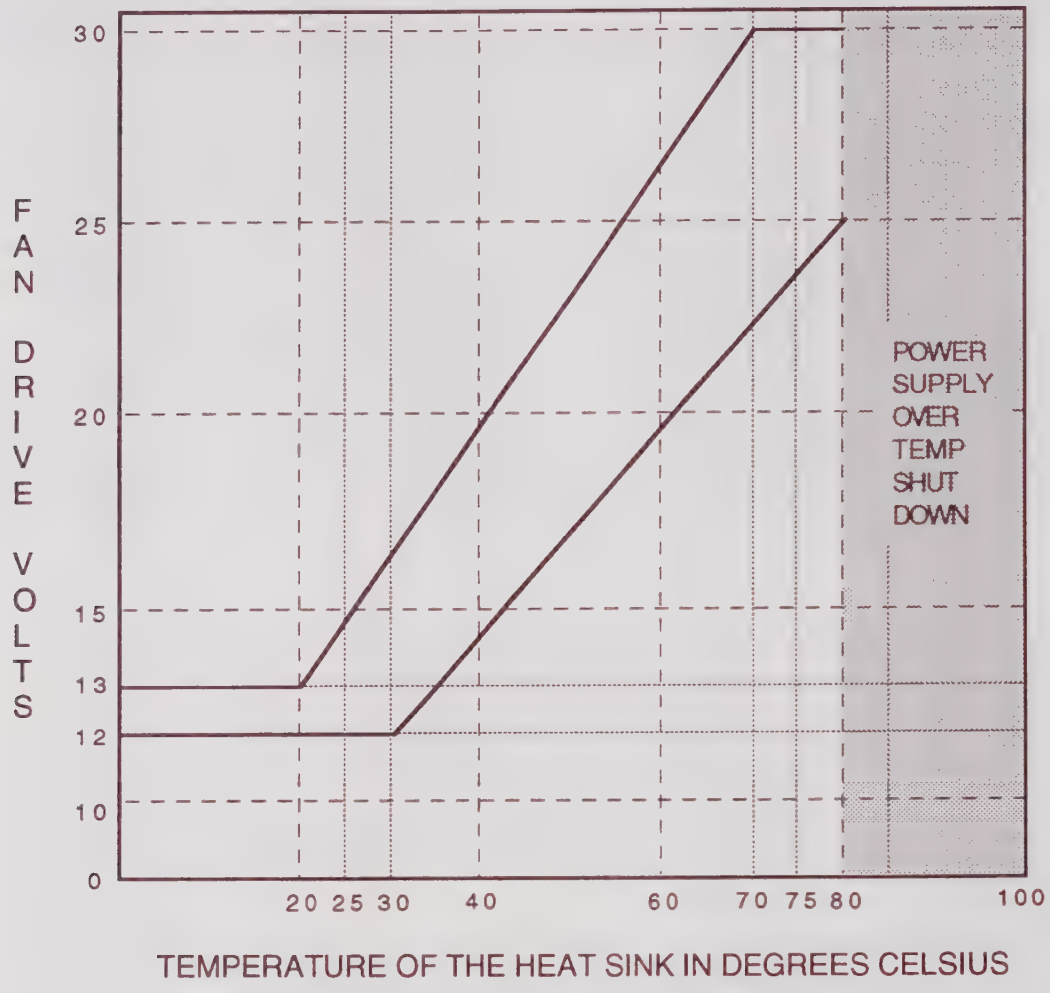


**Figure 5-18. Fan drive voltage versus temperature.**

Jumper J12 is a servicing jumper. When it is removed, the ground reference to the feedback input is removed, and the PWM shuts off. The fan drive then reduces to minimum.

**CAUTION**

*Jumper J12 is for testing purposes only. It may be pulled to eliminate the feedback signals from the input of U25. Troubleshooting should be attempted only by an experienced service person.*

## Alarm Logic

The temperature sensing elements also provide input to the Over Temp Indicator Comparator, U22A, and the Over Temp Shutdown Comparator, U22B. The over temperature indicator circuit provides an advance warning that the temperature is too high, in advance of an actual over temperature shutdown.

### Over Temperature Comparators

Resistors R145, R146, and R147 set up slightly different references to the two comparators. When the voltage at the common inputs to the two comparators drops to about 5.4 V, the output pin of comparator U22A will drop and DS10, the internal over temp LED is turned on. That low is inverted by U28E and applied to the front-panel over temp LED (located next to the front-panel STBY/ON switch) to turn it on. The user will then have a visual indication that an over temperature condition exists.

If the temperature continues to rise, the voltage on the inputs to the two comparators continues to decrease. At about 4.4 V, the power supply temperature is high enough that a shutdown is necessary. At that point the output of U22B goes low and sends the over temperature alarm to U26A in the shutdown logic circuitry. Negative-logic NOR gate U26A (any low in gives a high out) also has the /OVERVOLTS signal from the Power Monitor, U16, as an input.

### Shutdown Logic

A high output from U26A due to either an overvoltage condition or an excessive over temperature condition fires SCR Q25 and applies a low to the shutdown gate U26B and the PS FAIL LED gate U26C. Once fired, the SCR latches the circuit in the shutdown state until the power supply is completely turned off to remove the +14.4 V housekeeping voltage.

The Shutdown Logic gate, U26B, has an input from U26A that is the combined overvoltage and over temperature shutdown signal; an input from U28A that is the overcurrent shutdown signal, combined from all the overcurrent sensing circuits; and an input from U28D from the front panel STBY/ON switch. Any of these inputs going low generates a high SD (shutdown) signal to the Pulse-Width Modulator to turn off the switching signals to the Inverter FETs.

### Overvoltage Indicator

If an overvoltage condition exists, the /OVERVOLTS signal from U16 is applied to both U26A as input to the shutdown logic circuit and to an overvoltage indicator circuit. The /OVERVOLTS signal is inverted by U28C to fire SCR Q26. When that device fires, the overvoltage indicator LED, DS8 turns on to assist in troubleshooting an error condition in event of a power supply overvoltage problem. The SCR ensures that the indicator will remain on until the power supply is completely turned off to remove the +14.4 housekeeping supply voltage.

### Overcurrent Comparator

The overcurrent comparator, U20A, is referenced at 2.5 V from U16, pin 3. That reference is applied to the inverting input of U20A, so under normal conditions, the output of U20A is at ground. The OVERCURRENT signal is therefore low, and the output of inverter U28A is high. The overcurrent LED will be off, and both the PS FAIL LED gate, U26C, and Shutdown gate, U26B, will have a high signal on the overcurrent input pins.

The overcurrent signal input to U20A is formed by combining the outputs of the individual power supply overcurrent comparators. When an overcurrent condition on any power supply is detected, the common anode side of diodes CR47 through CR50 is pulled low. That low charges C86 through R132 to forward bias Q23. The delay provided by the time constant of C86-R132 prevents an overcurrent condition from being generated by the current inrush when the power supply first turns on.

When the voltage on C86 reaches the forward bias point of Q23, that transistor turns on, and its collector voltage rises to the +14.4 V level. This forward biases CR89 to immediately charge C85 to that same level. The output of comparator U20A then goes up to the +14.4 V housekeeping voltage level. That is inverted by U28A, and the overcurrent indicator, DS9, turns on. That low from U28A also causes a shutdown (SD) to be generated from U26B to turn off the PWM, U8, and a high output

from U26C, the PS FAIL LED gate. The high from U26C biases on Q27 to supply current to the front panel PS FAIL LED indicator (located near the STBY/ON switch).

When the PWM shuts down, the overcurrent signal from the individual power supplies will be removed, but the shut down signal must not be removed from the PWM for a short period of time. This is done by the time it takes C85 to discharge through R89 and R124. While C85 charged rapidly through CR89 for an overcurrent condition, that diode is reversed biased when the overcurrent condition goes away, and discharges more slowly to a level that causes the comparator to again switch its output low. That delay is how long the PWM remains off before it tries to restart. When an overcurrent condition exists, the PWM tries to run as C86 charges up and shuts down while C85 discharges. The difference between the two times (run to off) is about 1:5 and the overcurrent indicator LED, DS9, will blink.

### STBY/ON Switch Circuit

The front-panel STBY/ON switch controls the POWER OFF logic signal to the shutdown circuitry. The master power ON/OFFswitch to the power supply is located on the rear panel of the instrument. When the front-panel STBY/ON switch is in the ON position, the POWER OFF signal line is pulled low. This low is inverted by U28D and applied to the Shutdown Logic Gate, U26B, to allow the PWM to start operating if no other shutdown condition exists.

With the STBY/ON switch is in the STBY position, the POWER OFF control line is pulled high by R262 back to the +14.4 V supply. This high is inverted by U28D, and U26B applies a SD signal to the PWM that prevents it from outputting drive signals to the inverter switching FETs.

Also, with the POWER OFF control line high, diode CR259 is forward biased by the high POWER OFF signal. This removes the /UV LED signal as a control signal from the PS FAIL LED gate so the front-panel PS FAIL LED does not turn on with the STBY/ON switch in the STBY position.

### Power Supply Failure Warning

A second output developed from U28D is the /POFF signal. A low /POFF signal forward biases CR201 in the LINE SENSE input signal line to the Power Supply Supervisor, U16, to pull the line sense input (pin 5) of that device low. The Power Supply Supervisor then outputs the /PWR FAIL signal to the main instrument to provide immediate warning that the power supply is going down. Another input to this same signal line is the RDETECT signal via CR48 from the PWM, U8. This signal detects when the PWM is out of regulation and also causes the Power Supply Supervisor to issue the power failure imminent signal to the main instrument. This warning to the main instrument also occurs when the master power ON/OFF switch is turned off.

## OPTION 48 GPIB INTERFACE BOARD (A19)

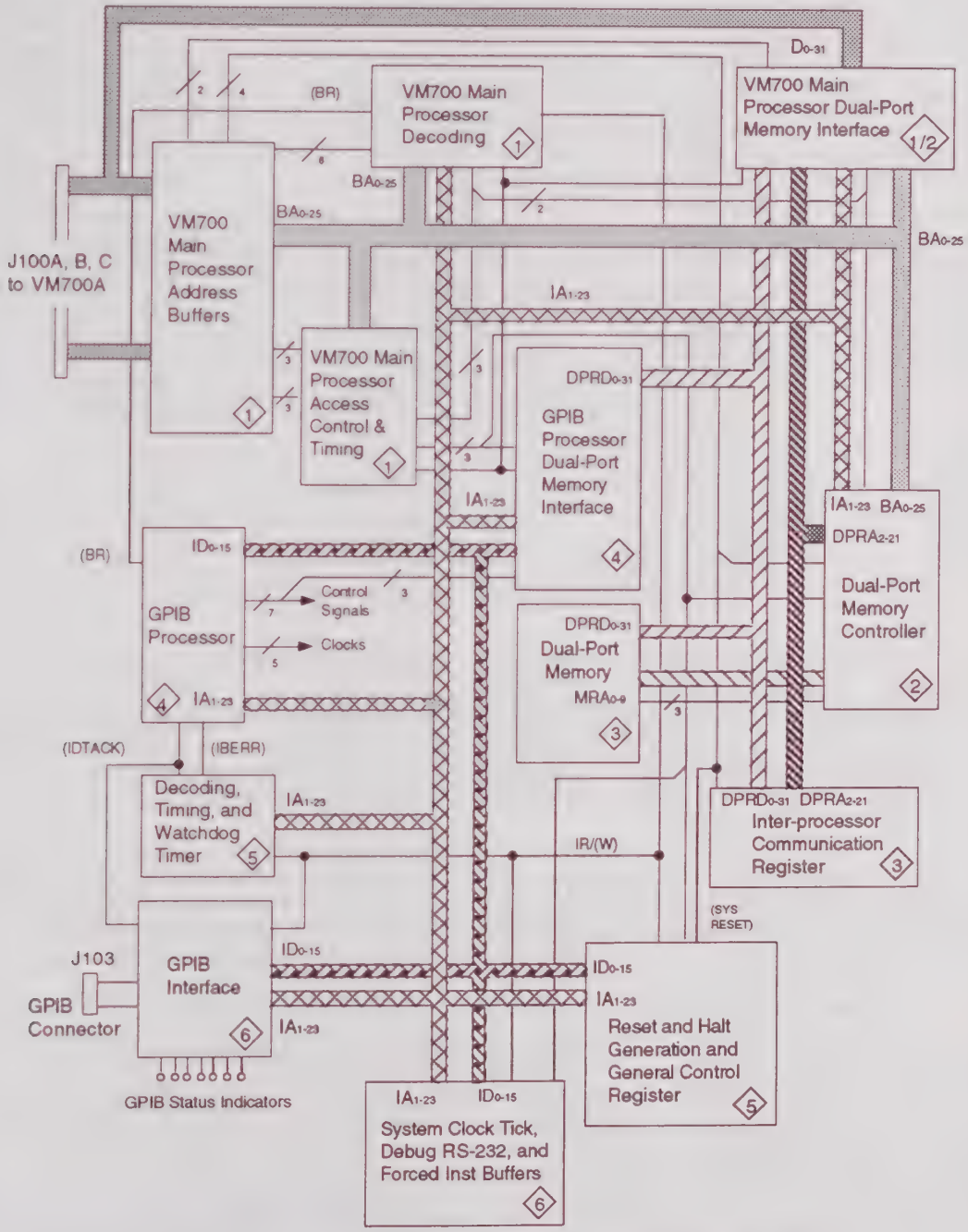


**Figure 5-19. Simplified block diagram of the VM700A GPIB Option board.**

## INTRODUCTION

The GPIB Interface Board (A19) contains a GPIB processor, a GPIB controller, Dual Port RAM, and the necessary additional circuity to handle interprocessor communication between the GPIB processor and the VM700A processor and communicate with remote devices via the GPIB bus. Figure 5-19 is shows the functional blocks and bus interconnections of the GPIB board. Figure 5-20 shows the installed location of the A19 circuit board in a fully optioned instrument.

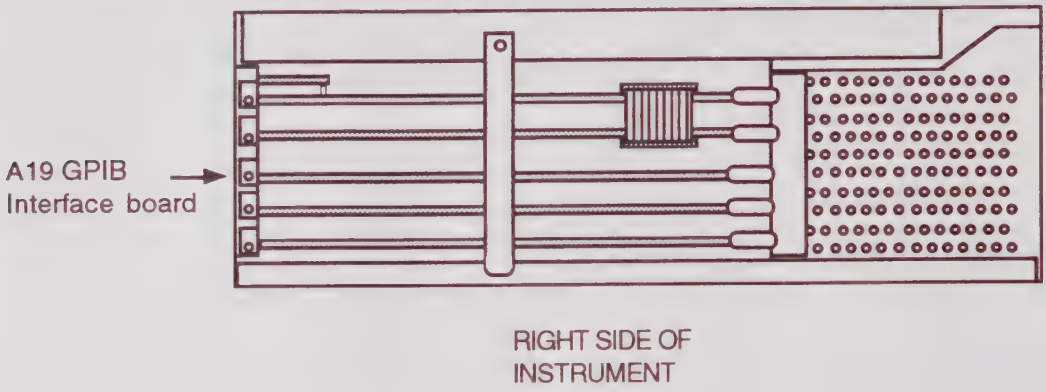


**Figure 5-20. GPIB board location in the VM700A.**

The GPIB processor tracks the state of the GPIB, handles attention messages, and performs protocol conversions. It is a separate processor that is loosely coupled to the main processor in the VM700A by interrupts and shared memory. The shared memory and the interprocessor communications register (IPC register) are accessible by either processor and are used to communicate between the processors. Besides the shared memory spaces, the GPIB Processor has some private RAM space that is not directly accessible by the VM700A processor.

The private RAM space is used by the GPIB processor as stack space to hold local variables and intermediate results. Another section of the memory space is the program RAM area. It is treated as ROM space by the GPIB processor and cannot be written to by the GPIB processor. The operating code for the GPIB board is store in the ROM of the VM700A. On initialization, a copy of that code is loaded into the program RAM space of the GPIB processor by the VM700A processor.

It is not possible for the two processors to access the shared memory at the same time. Either one or the other processor can access the shared RAM space or the IPC register. Both the shared RAM and the IPC register share the same controlling hardware. The Dual Port RAM controller has arbitration circuitry that controls accesses to the shared memory space to prevent contention. When both processors are accessing the shared space, this circuitry alternates accesses so neither processor blocks the other from the shared memory space.

The GPIB processor has no memory cache so it gets its program instructions from the program RAM space. Most of the remaining access time, the GPIB processor is doing reads and writes to and from the shared and private RAM space. It is important that the VM700A processor not be blocked from accessing the shared space so it may communicate with the GPIB processor. When the VM700A processor request access, the Dual Port RAM controller grants it access. However, as long as both processors are making accesses, they will be alternated so that the GPIB processor is not blocked. An exception to this is when either processor is doing a read-modify-write cycle (RMC). During such a cycle, the processor making the access has control and the other is blocked for the duration of the cycle. After the RMC is completed, the other processor is granted access if it is requesting it.

During during normal operation, communications between the two processors take place via the shared RAM and the IPC register. The IPC register allow either processor to set an interrupt flag to the other processor. When an interrupt occurs, the interprocessor communication is written to buffer then the other processor is interrupted to let it know a message is ready. When the interrupt has finished, the interrupted processor accesses the data to complete the communication.

A second type of access occurs in the debug mode. There is a debug window that allows the VM700A processor to see all 16 Mbytes of the 24-bit addresses of the GPIB processor. The GPIB processor has only 23 address lines with A0 being the missing one. That A0 address bit is controlled by an upper and lower data strobe to make the correct byte selection. The address space is divided into different areas, and each of these spaces use only a portion of the available addresses for active memory. Attempting to read or write to unused addresses in any of the memory divisions will cause a bus error. Access by the VM700A processor through the debug window halts the GPIB processor. The GPIB processor relinquishes control of its address bus and the VM700A processor takes control. The GPIB processor memory decoding circuitry is used by the VM700A processor to see the address space so the debug window can be used to test most of the GPIB hardware. An exception to this is the GPIB processor interrupts. The VM700A processor has no means to see or handle interrupts to the GPIB processor.

The GPIB interface is composed of the GPIB controller, U200, the DIO and Interface buffers, U199 and U201 respectively, the GPIB control logic PAL, U203, and the GPIB status PAL, U207.The GPIB controller handles the bus handshake, and transfers data into and out of the GPIB interface board via the two buffers. Data coming into the GPIB processor via the bus are interpreted, and any that are for the VM700A are sent on to the VM700A processor through the Dual Port memory communications path.

## VM700A TO GPIB INTERFACE (diagram $1_{A19}$)

### Main Processor Address Buffers (U103, U104, U105, U106)

The address buffers (U103, U104, U105, and U106) buffer the address and other selected control signals from the VM700A to the GPIB board. The buffered addresses are on the BA (0 - 25) bus.

### IA Bus Buffers (U107, U108, U109)

These bus buffers, U107, U108, and U109 take bits BA1 through BA23 from the buffered address bus and connect them to the internal 60101 processor address bus IA bus (1 - 23). This circuitry allows debug access through the window into the GPIB board. This access is not used during normal operation of the GPIB board.

### Block Select Switch (S100) and Identity Comparator (U100)

The block select switch must currently be set for the upper four bits 0 and the lower two to 1. The top six bits of the GPIB hex board base address are 0C (or 0000 11 in binary). Comparator U100 compares the upper six bits of the board address as set by the block select switch with the upper six bits from the VM700A address bus. The output signal on bin 19, the (BLOCK) signal (active low), is asserted whenever any address within the 64 Mbyte address space of the GPIB board is accessed. The (BLOCK) signal line must go low to enable the address decoding circuitry.

### VM Decoders (U110, U111)

Decoders U110 and U111 are used for accesses to the shared dual-port RAM and to the IPC register (interprocessor communications register). This is a different path than is accessed by U107, U108, and U109.

The high addresses are decoded by U110, VMDECODH and the low addresses are decoded by U111, VMDECODL. Decoder U111 produces only one output, the low register address (LOREGADR) signal to U110. This signal permits decoding of the IPC register addresses all the way down to the end and avoid multiple image addresses for that register. Decoder U110 produces three output signals. These signals are a bus request output (BR), a RAM chip enable (VMCERAM), and a register select (VMREGSEL).

The bus request signal (BR) goes to U505, the window control device to let it know that the VM700A is requesting a window access to the 68010 bus.

For access to the RAM (VMCERAM) is asserted. This accessed either the dual ported area or the program area of the RAM. When accessing the IPC register, (VMREGSEL) is asserted. This register is used to assist in handling communications between the VM700A processor and the GPIB processor.

## Window (U0505)

The window control device (WNDOWCTL, U505) is only involved in window accesses. The bus request line going to the GPIB processor also goes to U505 and the DSACKCTL PAL U115. After the bus request line is asserted and the bus grant line is also asserted when IDTACK, IBERR, and the address strobe (as read from pin 18) are all high, U505 knows that the GPIB processor has relinquished control of the bus. The window control device then can assert address strobe, upper and lower data strobes (at the appropriate times), and can also assert window enable, (WNDENABLE), to turn on U107, U108, and U109 to put the address from the VM700A on the internal address bus, IA (1 - 23). The GPIB processor bus does not have a 0 bit; the upper and lower data strobes are used to select the byte.

The (WNDENABLE) strobe also turns on the data bus buffer/registers.

## DSACKCTL PAL (U115)

When (IDTACK) is received by the DSACKCTL PAL, U115, DSACK is asserted back to the VM700A processor. Depending on whether the access is a window access (16-bit) or an access to the IPC register, the shared RAM or the Program RAM (all treated as a 32-bit data), the DSACKCTL device will assert either the (WDDSACK), for 16-bit data or the LWDSACK, for 32-bit data, signal. Data selector U113 selects the appropriate signal lines to be asserted back to the VM700A processor.

If a bus error occurs, the bus error signal (IBERR) passes through U115 and appears on the (GPBERR) signal line to be passed back through U113 to the VM700A processor.

A simple RC delay circuit is built into the DSDLYOUT1 and DSDLYOUT2 signal lines back to their respective inputs on U115. The (ENABLEDS) strobe to enable U113 is asserted as soon as access has begun, and it remains asserted after the address strobe is unasserted because of the time delay on DSDLYIN2 going high. (LWDSACK), (WDDSACK), and (GPBERR) all go high as soon as the VM700A address strobe (AS) goes high. The built-in delay of the DSDLYIN2 signal going high prevents U113 from being disabled immediately. This pulls the (DSACK) 0, (DSACK) 1, and (BERR) lines actively high for about 40 ns to return them to the level they need to be at before U113 is turned off.

## VM Buffer Control (U126)

The VM buffer control device, U126, selects the appropriate outputs to enable based on the input signal states. It controls the direction and timing of data flow between the two data busses.

## Data Bus Buffer/Registers (U122, U123, U124, U125)

These devices are bi-directional octal bus drivers are used to communicate data between the VM700A processor and the GPIB processor. Direction, enabling, and data clocking is control by U126 the VMBUFCTL PAL. They can be used to transfer either 16-bit words or 32-bit long words as needed for the access being made. When not enabled, the outputs are tristated. Either real time data or latched data can be transferred between the connected busses as determined by the control signals from U126.

# DUAL-PORT MEMORY CONTROLLER AND INTERFACE (diagram 2A19)

## Dual-Port Read Address Selector (U131, U132, U133, U135)

### DRAMMAP (U601)

The RAM is divided into three parts and two different sizes of memory may be used. The address inputs are remapped by U601 for the processor accesses to RAM.

### Data Selector (U134)

This device provides 4 bits of the dual port RAM address for selecting between the portions of the RAM to access.

## Mapped Addressing (U130)

Address data is available long before it is really needed. This is done so that the data can be accessed more quickly. The selection of where the data is going is done late in the access process. When the selection has been determined, the DRAM controller, U130, asserts either (SEL1) or (SEL2). These are asserted very late in the access time, so the addresses have to be available at the selected chip within nanoseconds. The (SEL2) signal is applied to the (A)/B inputs of the dual-port address selectors to switch them for the correct address input lines. The timing of this selection process is critical, and the addresses selectors are very fast. Ringing in the signals lines due to the fast transients between the data selectors and U130 is damped by the addition of RC501 and RC502 on the DPRA bus lines.

When (SEL1) is asserted, the VM700A processor is making a RAM access; (SEL2) is asserted for GPIB processor accesses.

## Decoder Latch (U602)

This device decodes the input addresses from the VM700A and GPIB board processors into the appropriate format. There are four bits output from each side of the decoder: LTCHVB0 - 3 and LTCHGB0 - 3 (latch VM700A byte flag and latch GPIB byte flag, respectively). These outputs are applied to U138 in parallel to provide the fastest possible access times to the selected devices after (CASEN) is asserted. The selected data from U130 as must be passed through U138 as soon as it is available.

Two other outputs from U602 are the LTCHVMRD and LTCHGPRD signals. These signals must be held stable for the VM700A or the GPIB accesses. The (RAMWE) and (RAMOE) signals are derived by U138 from the byte flag and read bits. If no byte flags are asserted, the access is to the IPC register, and the (IPCREGEN) bit is asserted. For an IPC register access, neither the (VMCERAM) bit or the (GPCERAM) bit will be asserted at the inputs of U602.

## DRAMCNTL (U138)

This device converts the (CASEN) line into 1 of 4 CAS signals: (RAMCAS) 0 - 4, and buffers the RAM write enable and RAM output enable lines: (RAMWE) and (RAMOE). There are eight memory parts to be driven by the (RAMWE) and (RAMOE) signals. For byte reading or writing, one or more pairs of RAM devices are accessed at the same time.

## DPAssist / PLCC (U507)

The DPAssist device, U507, is used to support the operation of the DRAM controller, U130.

The 33.333 MHz clock provided by Y501 goes to the DRAM controller, U130, and the dual-port assist IC, U507. The 33.333 MHz clock is used in U130 to provide the timing for DRAM accesses. Its frequency is determined by the speed of the RAMS, and permits the use of 100 ns DRAMS within the required time limits for RAM access and data settling.

The RCLK (refresh clock) output of U507 on pin 24 is a divided down version of the 33.333 MHz clock.

Once an access has been completed, and the processor with access relinquishes the bus, the other processor has preference and it will get the next DRAM or IPC register cycle if it is requesting it. DRAM and IPC registers accesses use the same processor cycle and occur in the same address space, so are equivalent cycles even though they accessing different device. DPAssist does not assert a request for the other processor if an RMC (read-modify-write cycle) is occurring. Every read access by the GPIB processor, U162 (diagram $3_{A19}$) is assumed to be an RMC until the (IAS) line goes back high at the end of the cycle.

## DUAL-PORT MEMORY AND INTERPROCESSOR COMMUNICATION REGISTER (diagram $3_{A19}$)

## DRAM U142, U143, U144, U149, U145, U146, U147, U148)

The address and data lines to the DRAM devices are damped by series RC packages on the bus lines. The data lines, DPRD bus (0 - 31), are also pulled up to + 5 V through pull-up resistor packages. The damping on the DRAM address lines prevents them from ringing.

## IPCOM Register U504

This device implements all the functions of the interprocessor communications register. The applied clock, CLK10 MHZ, is used to form the internal clocks within U504. Register enable and read or write signals control the activity of the register. When the (IPCREGEN) signal is asserted, it means that a read or write to the register can occur. The (IPCREAD) and (IPCWRITE) strobes contain timing information controlling when to start and end the activity (read or write). The (IPCWRITE) strobe occurs later than (IPCREAD) to permit data to stabilize before a write is attempted. The (SEL1) and (SEL2) strobes tell which processor has been granted IPC access. Within the register, the GPIB processor can set or reset only certain bits. The VM700A processor also can only set or reset certain bits. Some bits may be set by one processor and only cleared by the other processor.

One example of how this function is used is that the GPIB processor may mask its interrupt bits so that when a critical section of code is being performed the VM700A processor can be prevented from interrupting. The VM700A processor can recognize that it is prevented from access, but it cannot clear the GPIB interrupt mask bits.

The remaining bits of the register may be set, reset, or cleared in similar fashion by the processors as needed to maintain smooth communications between the two processors.

DPRA 2 determines which of the two addresses are being accessed. It determines if the "read it or set it" or "read it or clear it" location is being accessed. Reading the bits can be done when the DPRA 2 line is either low or high, but it can only be set by writing to the bits when DPRA 2 is low and can only be cleared by writing to the bits when DPRA 2 is high. Two different resets are provided, (GPRESET) and (SYSRSET). The (GPRESET) permits only certain of the bits to be reset to clear the GPIB processor while (SYSRSET) initializes everything.

Outputs of U505 include the register done line (IPCREGDONE). This signal is sent back to the DPASSIST PAL (diagram $2_{A19}$) to indicate that the activity being done by the IPCOMM register is finished. On a read cycle, the (IPCREGDONE) signal is returned quickly as data is merely placed on the bus and the bit is asserted. On a write cycle, some extra time is involved in getting the data clocked and latched before the (IPCREGDONE) line is asserted.

Other signals are RAMSIZE, going to the address decoding circuitry, and the program protect (PPROTECT) signal, also to the decoding circuitry. The (PPROTECT) line, when asserted, prevents the VM700A processor from writing to the program RAM. When the line is cleared, the VM700A processor can write to the program RAM. The RESETGP and HALTGP outputs go to the interrupt circuit of the GPIB processor. That processor may be reset, thereby clearing everything, or it may be just halted by the VM700A processor, after which it can resume where it left off in its operation.

Two interrupt request signals (IPCIRQ) to the GPIB processor and (IRQ1) to the VM700A processor are also output from U504. Within the IPC register there is a mask bit used to mask the interrupt bits appropriately. The VM700A processor has control over the mask bit for the (IRQ1) signal. The GPIB processor sets the (IRQ1) bit, and VM700A clears the interrupt request. Conversely, the GPIB processor has control of the mask bit for the (IPCIRQ) output. The VM700A processors sets the (IPCIRQ) bit and the GPIB processor clears it.

Inverter U509A inverts the output of the VMIRQ pin of U504 to obtain the correct logic for the (IRQ1) interrupt request signal to the VM700A processor.

## GPIB PROCESSOR AND DUAL-PORT MEMORY INTERFACE (diagram $4_{A19}$)

### GPIB Processor (U162)

The GPIB processor is used in the standard processor configuration. All of its 23 address lines and 16 data lines and several control lines go through damping resistors that eliminate overshoot ringing. Each of the address and data lines are also pulled up to the +5 V supply through pull-up resistor packages.

### 20 MHz Clock (Y502)

The clock circuit is a self-contained reference frequency source with an output frequency of 20 MHz. That is output as the DELAYCLK signal to U505 (diagram $1_{A19}$) and U606 (diagram $5_{A19}$). The 20 MHz clock is divided twice. In U164A it is divided to produce the CLK10MHZ and (CLOCK10MHZ) clocks and the ACKCLK. That 10 MHz is divided once more by U164B to produce the 5 MHz GPIBCLK signal for use by the GPIB Interface (diagram $6_{A19}$).

### Interrupt Control (U605)

The Interrupt Control PAL looks at address lines IA1 - IA3 and IA16 - IA19 and at the function code lines IFC0 - IFC2 from the GPIB Processor. The PAL decides if an interrupt acknowledge cycle is in progress. If it is not (or if a forced instruction is not taking place), nothing further happens at the outputs of U605. If an interrupt acknowledge cycle is taking place, the (VPA) line is asserted

back to the GPIB processor. During an interrupt, when the GPIB Processor does an interrupt acknowledge access, if the VPA (valid peripheral address) bit is asserted, the processor does an auto vector based on the state of the IPL0 - IPL2 lines.

The CPU space cycles for the GPIB processor are identified by the value on address lines IA16 -IA19 during a cycle. An interrupt acknowledge cycle has a function code of 111, all three function code bits (IFC0 - IFC2) are high, and the CPI space type field (IA16 - IA19) is 1111. The interrupt control PAL recognizes these bit states and looks at address bits IA1 - IA3 to determine the interrupt level that is being acknowledged by this cycle. All interrupt levels including the highest level, the (NMI), are acknowledged by the assertion of the (VPA) signal line to tell the GPIB processor to auto vector to the appropriate interrupt vector. For a NMI, the (NMICLR) bit is also asserted to clear the hardware causing the NMI. (NMI is used for engineering purposes only).

#### Forced Instruction Mode

This feature is used in troubleshooting. In normal operation, the (FINST) bit is pulled high. With a jumper installed on J101, everything else is taken off the bus. The (FINST) line is inverted in U605 for application to the RESET/REQUEST device, U610 (diagram $5_{A19}$). All response to interrupts is also disabled. A piece of psuedo data is asserted on the data bus, and the processor just goes into a continues count cycle that is used to exercise all the address lines. Address lines can then be easily checked for stuck bits.

## GPIB Buffer Control (U158)

PAL U158 controls the buffers that interface between the GPIB processor, the Dual-Port Memory, and the IPC register. The interface buffers can either gate the data straight through or they can latch the input data and output it in a later cycle. Access to all 32 bits of the buffer at the same time is not done. Since the GPIB processor data bus is only 16 bits wide, accesses are to the upper 16 bits or the lower 16 bits or one of the 8 bit bytes of the upper or lower 16 bits.

These buffers are used not only for access to the Dual-Port Memory and the IPC register, but when the VM700A does a window access for debug purposes, these buffers are used to wrap the lower 16 bits to the upper 16 bits. The VM700A processor accesses 16-bit data on data lines 31-16, so to access the lower 16 bits, the data has to be wrapped to the upper 16 data lines. When the VM700A processor performs a debug write to the Dual-Port Memory, the lower 16 bits are written through U156 and U157 unto the GPIB processor data bus, then back through U154 and U155 to the lower 16 bits of the Dual Port Memory. The upper 16 bits are written to the Dual-Port Memory directly through the data buffers of the VM700A processor.

## DECODING, TIMING, WATCHDOG TIMER, RESET & HALT GENERATION, AND CONTROL REGISTER (diagram $5_{A19}$)

## Decoding (U608, U607)

The main decoding occurs in PAL U608. The Decode Zero PAL (U607) eliminates images from the memory space. The (ZREGLO) line is asserted when all zeros are present on the address lines looked at by the PAL. The (Z17TO6) line is asserted when bits 6 through 17 of the addresses are all zero. These output along with the other inputs applied to the main decoder, U608, permit decoding to access the RS-232 debug interface (U611, diagram $6_{A19}$), the GPIB controller (U200, diagram $6_{A19}$, and the general control register (U609) without images. Figure 5-21 shows the GPIB board address allocation as seen by the GPIB processor.

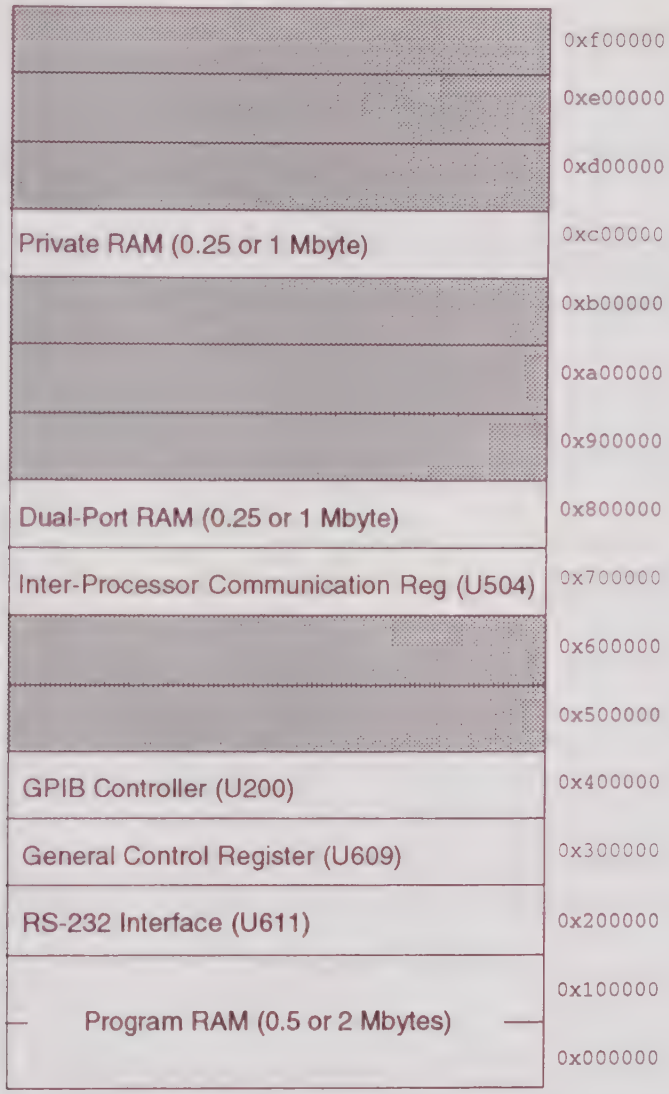


**Figure 5-21. GPIB board address space allocation as seen by the GPIB processor.**

When the VM700A processor is making an access through the debug window, it is asserting the address on the internal address bus (IA1 - IA23). The VM700A processor accesses are made through the same hardware as the GPIB processor uses for its accesses. With exception of a few data paths, the GPIB processor hardware can be thoroughly checked by the VM700A processor. Figure 5-22 is a map of the GPIB board address space allocation as seen by the VM700A processor.

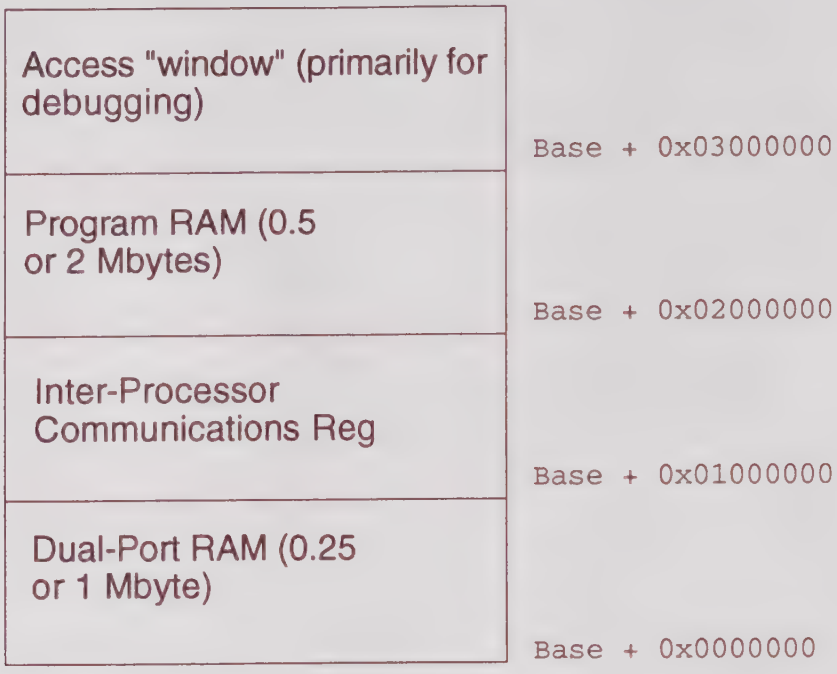


**Figure 5-22. GPIB board address space allocation as seen by the VM700A processor.**

## Acknowledge and Watchdog Timer (U606)

### Watchdog Timer

This device has a 10 µs timer used to time the how long the address strobe and data strobe are asserted. If a data acknowledge (IDTACK) does not happens within 10 µs after these strobes are asserted, the watchdog timer times out and generates a bus error (IBERR). This time out prevents accesses that don't access any device from causing a system hang.

### Acknowledge

The acknowledge part of U606 creates acknowledgements for a number of devices or events that do not create their own. One of these for example is the (QUIKEND) signal. When a register access is done, it is very fast, so the (QUICKEND) signal is asserted to tell U606 to assert the data acknowledgement (IDTACK) line right away.

When accesses to the control register or RAM are made, these accesses take some time to finish. The acknowledgement portion of U606 waits for the (CREDONE) or GPACCEND lines, respectively, to become true before the miscellaneous data acknowledgement line (MISCDT) is asserted. The feedback from the right side of R610 (IDTACK) back to the DTACK input of U606 permits the signal on pin 3 to be viewed not as the level at pin 18, but as the actual level of the (IDTACK) line. Depending on the current flow through R610, these two levels may be close to the same or somewhat different.

## Control Register (U609)

This register accesses in the same manner as the IPC register. It is normally only accessible by the GPIB processor, but the VM700A can access this register via the debug window. This register controls the group execute trigger (GET) and handles the BYTEIO input which is the DMA request bit from the GPIB device. The BYTEIO bit provides a means to easily determine if a byte input or output request is pending at the GPIB interface.

The CLKTICK input from the DUART (U611, diagram $6_{A19}$) is used to generate system timing. It is a square-wave signal that sets a register bit on the rising edge. This asserts the CTICKIRQ output (nominally a 60 Hz clock tick) to the GPIB processor via the RESET/REQUEST device, U610.

Accesses to the Control Register are enabled by the CRSELECT bit from the main decode PAL. The IR/(W) bit controls reading or writing to the register and the IA2 address line is used to control the choice of either setting register bits or resetting them on a write. Some of the bits are either read only or can be set only under special circumstances.

## Reset/Request (U610)

### Reset

In the schematic, the top half of U610 provides the reset function. Timing of the various internal functions is provided by the (CLK10MHZ) clock signal. Reset must be set for at least 132 clock cycles to make sure the GPIB processor is completely reset. If the RESETGP signal is asserted momentarily, the (GPRESET) along with the (CPURESET) and (CPUHALT) lines will be asserted for 136 clock cycles. To fully reset the GPIB processor, both (CPURESET) and (CPUHALT) have to be asserted. (CPUHALT) remains asserted for a slight period of time after (CPURESET) is removed to meet the requirements of the GPIB processor.

If (SYSRSET) is asserted, it asserts a complete GPIB reset, and the (GPRESET), (CPUHALT), and (CPURESET) lines are all asserted.

The GPIB processor can execute a reset instruction. This instruction asserts only the (CPURESET) line from the GPIB processor which is then read by U610 (pins 23 and 24 of U610 are both bidirectional). If (CPURESET) from the GPIB processor is asserted, it is passed to pin 26 to -

If the GPIB processor is halted because of a failure of some type on the GPIB processor bus, a halt without an assertion of the HALTGP input will cause U610 to assert reset on the GPIB processor to restart the operation in an attempt to get the GPIB board going again. For troubleshooting purposes, this auto reset may be disabled by placing a jumper across the pins of J602. With this jumper in place, whenever a failure halt occurs, the auto-reset is disabled so that the halted state may be examined to attempt to locate the reason for failure.

### Request

The request portion of U610 is an interrupt priority encoder. The interrupt requests are coded onto the three interrupt priority lines back to the GPIB processor with the highest priority interrupt present being passed to the GPIB processor. The profiling NMI (non-maskable interrupt) has the highest priority and IPCIRQ has the lowest priority. If the forced instruction (FINST) line is asserted, the priority encoding onto the (IPL)0 - (IPL)2 lines is disabled.

# GPIB INTERFACE, SYSTEM CLOCK, DEBUG RS-232, AND FORCED INSTRUCTION BUFFERS (diagram 6A19)

## GPIB Controller (U200, U203, U166A)

The GPIB controller, with the assistance of U203, transfers data into and out of the GPIB board and handles the GPIB handshaking over the interface bus. PAL device U203 takes care of the unusual timing of events required of the GPIB controller. The 10 MHz ACKCLK signal (acknowledge clock) is applied to U166A, a highly metastable resistant D Flip-Flop device. The D input to U166A is always high through pull-up resistor R183. From U203, the ACKDLYOUT signal holds the flip-flop cleared as long as that signal is low. When it goes high, the flip-flop clocks a 1 out to the ACKDLYIN input of U203. This provides part of the timing required for accesses to the GPIB Controller.

## DUART AND RS-232 DEBUG (U611)

This device is a DUART, a dual asynchronous receiver/transmitter. The RS-232 portion of the device is used during the development stage of the circuit board for debugging purposes. On production circuit boards, the RS-232 and baud rate jumper connectors are absent. Other parts of U611 perform circuit functions in normal operation of the option board. The built-in timer in the part is used to develop the system clock, CLKTICK, for the operating system. Outputs OP5 and OP6 are used to control two of the GPIB status indicators on the rear panel circuit board. Output OP7, via inverter U102C, provides the SC control bit to both U207 and U201. In U207, the SC bit is used to control the SYS CTL LED indicator. It switches U201, one of the GPIB interface device, between either being able to assert the REN and IFC line, in the case where the GPIB board of the VM700A is the system controller, or just being able to receive the REN and IFC assertions from another system controller.

## Forced Instruction Buffers (U612, U613)

These buffers are hardwired with the forced instruction code on the input pins. When enabled by the (FINSTEN) line being asserted, the forced instruction word is placed on the 16-bit ID0 - 15 data bus. The data is a MOVE QUICK instruction to the GPIB processor which has the same affect as a NOP (no operation) command. It is used to increment the GPIB processor through its address lines for debugging purposes. The address lines can then be checked to make sure none are stuck.

## GPIB Bus Interface and Filters (U199, U201, FL101 and FL102)

The common-mode filters on the GPIB data and handshake lines reduce the EMI to acceptable levels. Data is handled by GPIB bus interface U199 and the handshake signals are handled by GPIB bus interface U201. These interfaces are bi-directional for passing the signals in both directions to and from the GPIB controller U200.

## GPIB Status LEDS (U207 and DS103 - DS107)

The GPIBSTAT device, U207, drives the LED status indicators on the rear panel of the GPIB interface board. The (LSTN), (TALK), (SREQ), and (CACT) (controller active) bits are all derived from the various control and handshake lines coming from the GPIB controller. The REM LED is driven by a signal from the DUART. Pin OP6 (REMOTE) is used only for turning on the REM LED on the rear panel of the GPIB board. Pin OP5 (LOCKED) of U611 is used only for turning on the LOCK LED indicator. Figure 5-23 shows the rear panel and status LED arrangement for the circuit board.

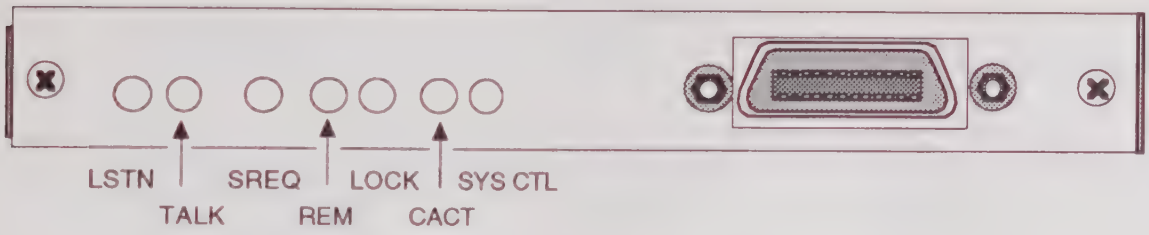


Figure 5-23. GPIB rear panel arrangement.

# Section 6
# TROUBLESHOOTING AND DIAGNOSTICS

Troubleshooting the VM700A is a matter of following a logical series of steps that isolate a problem to a specific system module such as a circuit board, power supply, or display monitor. After isolating the problem, repair consists of replacing the faulty module and checking the instrument for correct operation.

Some VM700A faults can be isolated to just one system module. Correcting these faults requires replacing the faulty module.

Other faults may be caused by one or more defective system modules. In either case, the VM700A diagnostics routines can assist in isolating the fault to field-replaceable modules. These routines can also evaluate each of the instrument's major hardware components to provide a high degree of confidence that measurement results produced by the instrument are correct.

The best way to repair multiple-module faults is to replace one module at a time, checking the instrument's operation after each replacement, until you have located and replaced the faulty module.

This section presents a series of operational fault symptoms and suggests corrective actions. The most efficient way to use the information in this section involves a two-step approach:

1. Compare the failure symptoms you are experiencing with the symptoms presented in Table 6-1.
2. Run the VM700A built-in diagnostics routines to assist in isolating the failure.

Following these steps will typically isolate any VM700A fault to a field-replaceable module such as a circuit board.

**WARNING**

*High voltages are present inside the VM700A chassis. These voltages can cause serious injury. Leave all service procedures that require removing instrument covers to qualified service personnel.*

For information on how to return defective instrument modules to Tektronix for repair, see Section 3: *Maintenance and Replacement Procedures.*

## ISOLATING OPERATIONAL FAULTS

Table 6-1 lists a series of instrument faults or failures, related possible causes, and suggested corrective actions. Together with the diagnostics, you may use the information in the table to characterize faulty VM700A operation and as a guide to repair.

## Table 6-1
## VM700A Symptoms and Corrective Actions

| Symptom | Possible Cause | Corrective Action |
|---|---|---|
| No display (blank screen) | Faulty power supply | Check power supply. See *Troubleshooting the Power Supply* in this section. |
| | Faulty CRT | Replace CRT assembly. See Section 3, *Removing and Replacing the CRT Assembly.* |
| | Loose Cables | Check for loose AC line cord, CRT connector, or power supply connections. To gain access to the CRT connector, see *Removing and Replacing the CRT Assembly* in Section 3. To gain access to power supply connections, see *Removing and Replacing the Power Supply* in Section 3. |
| | Blown mains (line) fuse | Check fuse on rear panel. |
| | Faulty CPU board (A5) | Check the CPU board's green LEDs (see the section *CPU board Diagnostic LEDs*).<br>Replace the CPU board. See Section 3, *Removing and Replacing the CPU Board.* |
| | Faulty display memory board (A9) | Replace the display memory board. See Section 3, *Removing and Replacing the Display Memory Board.* |
| Glitches and spikes in Waveform mode | Faulty ADC board (A3) | Replace ADC board. See Section 3, *Removing and Replacing the ADC Board.* |
| | Faulty data acquisition board (A7) | Replace the data acquisition board. See *Removing and Replacing the Data Acquisition Board* in Section 3. |
| | Faulty controller board (A8) | Replace the controller board. See Section 3, *Removing and Replacing the Controller Board.* |
| | Faulty analog input board (A1) | Replace the analog input board. See Section 3, *Removing and Replacing the Analog Input Board.* |
| VM700A displays the re-initializing message or hangs | Faulty genlock board (A2) | Replace the genlock board. See Section 3, *Removing and Replacing the Genlock Board.* |
| | Faulty ADC board (A3) | Replace the ADC board. See Section 3, *Removing and Replacing the ADC Board.* |
| | Faulty controller board (A8) | Replace the controller board. See Section 3, *Removing and Replacing the Controller Board.* |
| | Faulty data acquisition board (A7) | Replace the data acquisition board. See Section 3, *Removing and Replacing the Data Acquisition Board.* |
| | Faulty EPROM/NVRAM board (A6) | Replace the EPROM/NVRAM board. See Section 3, *Removing and Replacing the EPROM/NVRAM Board.* |
| | Faulty display memory board (A9) | Replace the display memory board. See Section 3, *Removing and Replacing the Display Memory Board.* |
| | Faulty CRT touch panel | Replace the CRT touch panel. See Section 3, *Removing and Replacing the CRT Touch Panel.* |
| | Faulty front panel (A10A1) or keypad board (A10A2) | Replace front panel/keypad board assembly. See Section 3, *Removing and Replacing the Keypad Board.* |

Table 6-1 (cont)

| Symptom | Possible Cause | Corrective Action |
|---|---|---|
| CRT touch panel not operating<br><br>NOTE: If the touch panel is not functioning, the VM700A will either display the re-initializing message or hang. This is not the only problem that can cause this symptom (see previous symptom). | Faulty CRT touch panel or cabling | Replace CRT touch panel. See Section 3, *Removing and Replacing the CRT Touch Panel.* |
| | Loose connections | Check connections on back of front panel board. See Section 3, *Removing and Replacing the CRT Touch Panel.* |
| | Conductive coating on inside of bezel is touching CRT touch screen (VM700 instruments below serial number 21135, or VM700A instruments below serial number 22406 only) | Remove bezel and scrape or sand conductive EMI coating on the back away from the area surrounding the CRT opening. Clean carefully before replacing. To remove and replace the bezel, see Section 3, *Removing and Replacing the CRT Bezel.* |
| | Faulty front panel (A10A1) or keypad board (A10A2) | Replace the front panel/keypad board assembly. See Section 3, *Removing and Replacing the Keypad Board.* |
| | Faulty display memory board (A9) | Replace the display memory board. See Section 3, *Removing and Replacing the Display Memory Board.* |
| Noise at fixed intervals in Line Spectrum mode | Faulty data acquisition board (A7) | Replace the data acquisition board. See Section 3, *Removing and Replacing the Data Acquisition Board.* |
| RAM test failure | Faulty display memory board (A9) | Replace the display memory board. See Section 3, *Removing and Replacing the Display Memory Board.* |
| | Faulty interconnect board socket | Replace the interconnect board. See Section 3, *Removing and Replacing the Interconnect Board.* |
| ROM test failure | Faulty EPROM/NVRAM board (A6) | Replace the EPROM/NVRAM board. See Section 3, *Removing and Replacing the EPROM/NVRAM Board.* |
| | Faulty interconnect board (A11) | Replace the interconnect board. See Section 3, *Removing and Replacing the Interconnect Board.* |
| | DIP switches on EPROM/NVRAM board set incorrectly | Verify the settings of the DIP switches. See Figure 6-1. |
| Analog gain out of specification | Faulty ADC board (A3) | Replace the ADC board. See Section 3, *Removing and Replacing the ADC Board.* |
| | Faulty analog input board (A1) | Replace analog input board. See Section 3, *Removing and Replacing the Analog Input Board.* |
| OVERTEMP status LED lit | Faulty power supply | Check power supply. See *Power Supply Diagnostics* in this section. |
| | Faulty or blocked cooling fan | Check cooling fan for operation and for obstructions blocking air flow. |

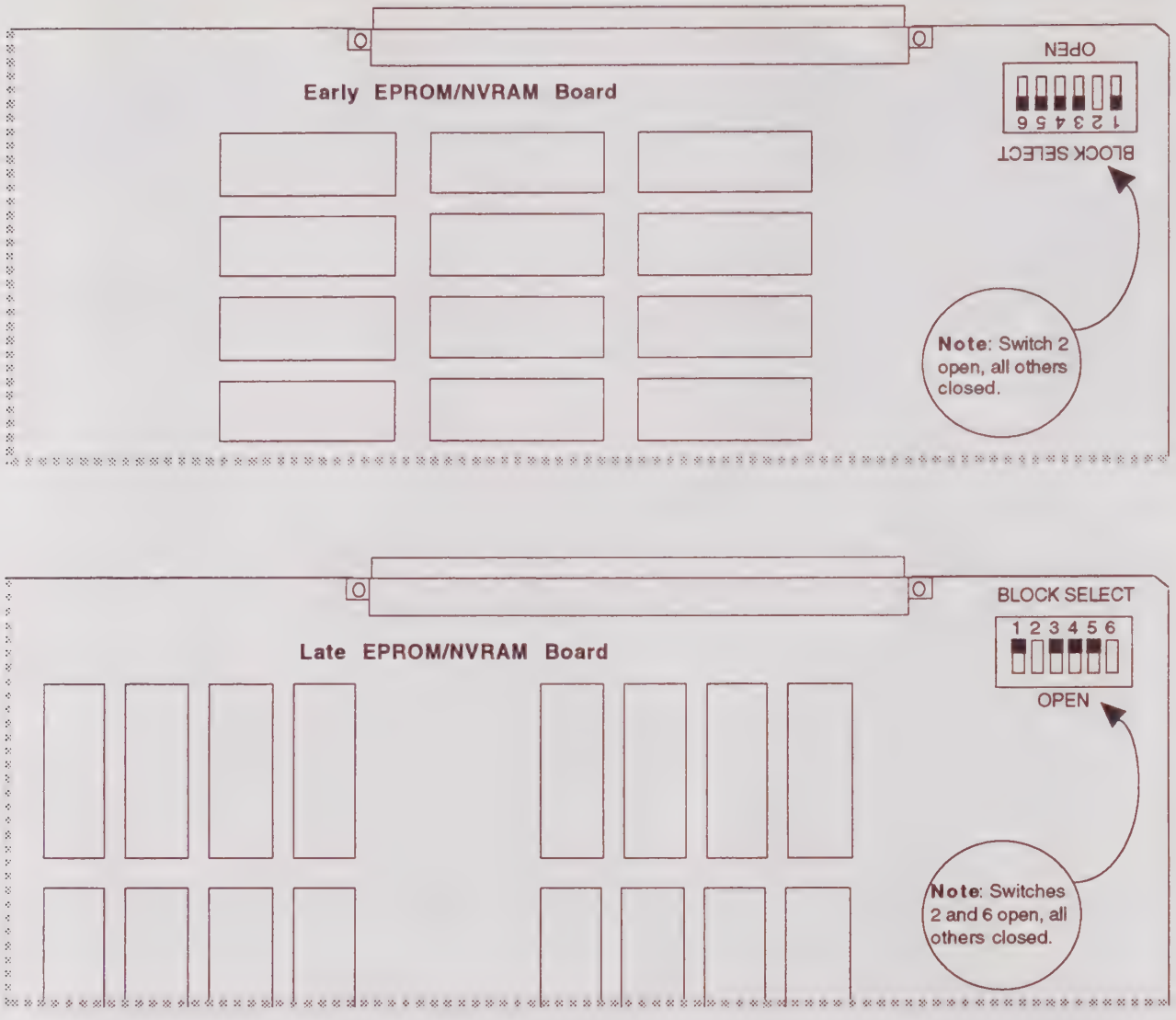


**Figure 6-1. DIP Switch Settings on Early and Late EPROM/NVRAM Boards.**

Table 6-1 (cont)

| Symptom | Possible Cause | Corrective Action |
|---|---|---|
| OVERTEMP status LED lit (cont) | Loose connections to cooling fan | Check cooling fan connections. See Section 3, *Removing and Replacing the Cooling Fan.* |
| | Clogged or dirty front bezel air filters | Clean the front bezel air filters. See Section 3, *Cleaning the Front Bezel Air Filters.* |
| POWER/FAIL Status LED lit | Power supply is in "over temperature shutdown mode" | Same as OVERTEMP symptom. |
| | Faulty monitor pulling down 12 V on power supply | Diagnose by disconnecting 12 V monitor supply cable (P3) at power supply and retrying startup. If POWER/FAIL status LED does not light with 12 V cable disconnected, replace CRT module. |
| | Faulty power supply | Check power supply. See *Power Supply Diagnostics* in this section. |
| | Load on power supply exceeds design limit | Check power supply. See *Power Supply Diagnostics* in this section. |
| No waveform display, or a "Loss of Sync" message in waveform mode | Loose cable connections | Check cable connections. |
| | Faulty genlock board (A2) | Replace the genlock board. See Section 3, *Removing and Replacing the Genlock Board.* |
| | Faulty controller board (A8) | Replace the controller board. See Section 3, *Removing and Replacing the Controller Board.* |
| | Faulty analog input board (A1) | Replace analog input board. See Section 3, *Removing and Replacing the Analog Input Board.* |
| | Incorrect input signal (incorrect H sync or V sync signal) | Verify that horizontal and vertical sync signals are being sent. |
| | Signal too noisy (signal/noise ratio below required minimum) | Correct the cause of low S/N ratio signal. |
| | Incorrect sync source selected | Select correct sync source. |
| Screen brightness won't adjust | Faulty CRT display module | Replace the CRT module. See Section 3, *Removing and Replacing the CRT Display.* |
| | Faulty front panel (A10A1) or keypad board (A10A2) | Replace the front panel/keypad board assembly. See Section 3, *Removing and Replacing the Keypad Board assembly.* |
| | Faulty display memory board (A9) | Replace the display memory board. See Section 3, *Removing and Replacing the Display Memory Board.* |

# DIAGNOSTICS

The VM700A contains two levels of diagnostic routines:

- **Power-up diagnostics** (low-level diagnostics) always run during the instrument's power-up cycle and test the CPU board (A5), EPROM board (A6), and Display Memory (A9) and Front Panel boards (A10). Power-up diagnostics check those system components needed to run the user-selectable diagnostics.
- **User-selectable diagnostics** (high-level diagnostics) test other VM700A hardware components. The various tests in this group can be user selected to run once at power-up (after the low-level diagnostics), in a continuous loop, or on demand.

## Power-Up Diagnostics

The power-up, or low-level, diagnostics perform basic tests on the operation of the A5 CPU board, the A6 EPROM board, and the A9 Display Memory board.

The VM700A displays the name of the low-level test in progress as each test proceeds. When tests of the three boards are completed, the VM700A displays the message:

*—*—*—LOW LEVEL DIAGNOSTICS COMPLETE —*—*—*

then runs the diagnostics routines specified by the user in the Diagnostics Selection file. This file is found in the /nvram0/ConfigFiles directory.

The power-up diagnostics are listed and described in Table 6-2.

### Bypassing the Power-Up Diagnostics

To bypass all power-up diagnostics (both low-level and high-level), press and hold the Waveform button when you power on the VM700A. (If the VM700A is being started cold, hold the button for three to five seconds; if the VM700A is already warmed up, one or two seconds is enough.)

The VM700A displays the message:

*—* —* —INITIALIZING IN QUICK START MODE —* —* —*

then proceeds with system initialization.

### Power-Up Diagnostic Errors

When a low-level diagnostic routine detects an error, the VM700A displays the message:

*— PRESS ANY FRONT PANEL BUTTON OR —*
*— TOGGLE 1 OF 3 CPU "MODE" SWITCHES TO CONTINUE —*
*AUTOMATICALLY CONTINUES IN 60 SECONDS*

then waits for a response from the user. The first line of the message ("Press any Front Panel Button") only appears if the VM700A has passed enough tests that the front panel buttons are operative. Pressing a front panel button allows the VM700A to try to power up in its normal state. If the Automatically Continues line appears, the number counts down from 60 to show the remaining time.

Table 6-2
VM700A Power-Up Diagnostics

| Board Tested | Test Name | Description |
|---|---|---|
| CPU | Math Co-processor | Checks for exception errors when the math co-processor performs floating-point computations. |
| | CPU NVRAM[a]<br>Decoding<br>Segment Size<br>Address Lines<br>Data Lines<br>Valid Memory | Standard RAM test.<br>Checks decoded address space size.<br>Checks the size of the RAM segment.<br>Checks address integrity.<br>Checks data bus integrity.<br>Performs checkerboard pattern to test RAM. |
| Display/Front Panel | Shared RAM[a]<br>Decoding<br>Segment Size<br>Address Lines<br>Data Lines<br>Valid Memory | Standard RAM test.<br>Checks decoded address space size.<br>Checks the size of the RAM segment.<br>Checks address integrity.<br>Checks data bus integrity.<br>Performs checkerboard pattern to test RAM. |
| EPROM/NVRAM | Probe Board Type<br>Board Type<br>Parts in Set | Determines type of board. Possible board types are: 1.5, 3.0, 6.0, or 12.0 Mbyte. Information contained in each EPROM determines quantity of EPROMs on the board. |
| | Total CRC Check | Runs 32-bit CRC check on ROM space and compares the result with a CRC stored in the CPU board's NVRAM. |
| | Part CRC Check | Runs only if total CRC check fails. This test runs a 16-bit CRC check of each EPROM on the board. Test also checks for correct part location on board. |
| | Total CRC Store | Runs only if total CRC check fails. If total CRC check fails but part CRC check passes, this test computes a 32-bit CRC (based on the results of the 16-bit CRCs for each PROM) and stores it in the CPU board's NVRAM. |

[a]Contents of RAM are copied to main system RAM before the test runs. This preserves the contents of RAM. If main system RAM is bad, the test returns ???, indicating it did not run.

If the front panel buttons do not operate, you can use the following procedure to allow the VM700A to continue powering up:

1. Power off the VM700A.
2. Remove the VM700A from the equipment rack (if rack-mounted).
3. Remove the two screws from the rear panel that hold the left side cover (as viewed from the front of the instrument).
4. Slide the left side cover about two-thirds of the way back.
5. On the A5 CPU board (the bottom board) locate the six-section DIP switch with the markings "FAC | MODE |" printed on the circuit board in front of it.
6. Power the VM700A back on.
7. When the error message is displayed, click any of the three switches above the word MODE (the three closest to the front of the instrument) up, then back down to continue.

## User-Selectable Diagnostics

High-level diagnostics can be run during a power-up sequence (Power-Up mode), on demand, or in a continuous loop. Table 6-3 lists and describes the VM700A user-selectable diagnostics.

## Table 6-3
## User-Selectable Diagnostics

| Board Tested | Test Name | Description |
|---|---|---|
| Genlock<br><br>Successful completion of these tests requires that the Controller (A8) be operating correctly. | Status Checks | Verifies that the Genlock status register correctly represents the hardware configuration. *These tests must pass to run the lock tests.* |
| | NTSC (or PAL) VCO Lock | Checks the board's ability to acquire and hold lock using each VCO. The test forcefully breaks lock by toggling rapidly between internal and external sync with the genlock configured for the opposite standard. Then the genlock is configured for the standard being tested and time-to-lock is measured. |
| Controller | Control Registers | Checks mode, Genlock configuration, Genlock status, and filter control registers with 8-bit walking-1 and walking-0 patterns. Checks analog input register for writeability (no bus errors). Checks DVM readback register for readability. |
| | Overrange Detector | Checks bit 4 of the Controller interrupt register. ADC output is latched high to force the bit to set, and latched low to clear it. |
| | Clock Detector | Checks bit 2 of the Controller interrupt register. Disables the sample clock to cause the bit to set, then re-enables the sample clock to clear the bit. |
| | Clamp Counters (A–C) and Acq Sig Counters (Sig0–Sig2) | Checks the counter chips. Performs walking-1 and walking-0 tests (read and write) and checks countdown over several reads. |
| | Register File | Runs only on later Controller/Acquisition boards. |
| | State Machine Settings, Trigger, and Sequence RAM | Checks SRUN and TRUN lines of the settings RAM; control, data, and address lines of the trigger RAM. Runs a checkerboard pattern test on the trigger RAM. Tests state machine sequence RAM. |
| Acquisition | RAM | Fills RAM with psuedo-random sequence, then reads and verifies it. |
| | FIFO | Checks that data moves through the FIFO without overflow, even with processor bus contentions. |

Table 6-3 (cont)

| Board Tested | Test Name | Description |
|---|---|---|
| Acquisition (cont)<br><br>Successful completion of these tests requires that Genlock (A2) and Controller (A8) boards be operating correctly. | Load /Looping | Checks that acquisition state machine can be programmed to write the contents of temporary store into acquisition memory locations, and that it can process acquisition program GOTO instructions. |
| | Optional Hardware | "Pass" indicates hardware present and working; "NA" indicates hardware not available. |
| | External Triggers | Checks that Controller trigger RAM can be used to recognize when certain bits in the ADC data stream are set. Causes signal interrupts that are counted by the Controller's Sig0, Sig1, Sig2 counters. |
| | Long Acquisitions | Runs long acquisitions to verify interaction of Controller and Acquisition state machines. |
| | Sample Dropping | Uses Controller state machine to toggle offset level (a dynamic setting on the Analog Input board), while a long acquisition runs. Analyzes the acquired data to detect missing samples. |
| ADC<br><br>Successful completion of these tests requires that Genlock (A2), Controller (A8), and Acquisition (A7) boards be operating correctly.<br><br>Tests involving the Calibration DAC require that the Analog Input (A1) board be operating correctly. | Mode Checks | Output latches in all zeros, all ones, normal, and overflow-bit modes and checks the ADC output by running an acquisition and scanning acquired data. The overflow bit test generates a drive level to overrange the board, then acquires data and checks to verify that the board's overrange bit was set. |
| | Bit Patterns | Generates a calibration DAC drive level that produces an ADC level corresponding to the bit pattern shown in the individual test. The diagnostic runs a long acquisition and searches the acquired data for the individual test's bit pattern. |
| Analog Input<br><br>Successful completion of these tests requires that Genlock (A2), Controller (A8), and Acquisition (A7) boards be operating correctly. | DVM | Calibrates the DVM to the standard gating patterns for both TV standards (and the gating pattern that enables the DVM for all video lines) using a precise 1.000 volt reference and ground.[a] |
| | DC Paths | Checks that a nominal DC voltage can be routed through each input channel to the ADC. |
| | Gain Control | Checks gain control range and bit weights.[b] |

[a]Each gating pattern has a different number of active video lines, so the ratio of the NTSC-pattern cal factor to always-on pattern equals the ratio of NTSC pattern active lines to the always-on pattern number. Likewise for PAL.

[b]Range is the arithmetic sum of the measured bit weights, and bit weights are measured as the effect of toggling only the indicated bit.

Table 6-3 (cont)

| Board Tested | Test Name | Description |
|---|---|---|
| Analog Input (cont) | Calibration DAC | Checks the range and bit weights of the calibration DAC. |
| | Offset Control | Checks the range and bit weights of the offset-control DAC. |
| | Input Selection | Checks the input selection switch by setting the channel bias DACs to different levels on each channel and measuring the net bias for each switch setting. |
| | Bias Control Range (for each channel) | Checks each channel's bias control DAC for range and bit weights. Verifies each DAC for independence by changing the other two and monitoring the one being tested to verify that its range and bit weight remain unchanged. |
| | Clamp (for each channel) | Checks each channel's clamp level DAC for range and bit weights. Verifies each DAC for independence by changing the other two and monitoring the one being tested to verify that its range and bit weight remain unchanged. Measures fast- and slow-clamp response time by timing a 100 mV clamp-level change. Verifies fast clamping at each possible clamp-pulse width. |
| Filter<br><br>Successful completion of these tests requires that Genlock (A2), Controller (A8), Acquisition (A7), and Analog Input (A1) boards be operating correctly. | Times 8 Gain | Using the ADC, two Cal DAC dc levels are measured with x8 gain off, two more with it on, and the gain is calculated from the ratio of the differences. |
| | Filter Slot *n* (for slots 0 through 5) | Slot 0 is a bypass path, rather than a filter slot. These tests include filter ID and frequency response sub-tests.<br><br>The filter ID sub-test checks instrument firmware to determine the TV standard and release version. This information is used by the diagnostic to determine valid filter IDs for each slot.<br><br>The frequency response sub-test generates a psuedo square-wave signal by switching channel input between A and B, with each channel input clamped to a different dc level. The signal is routed through the filter slot under test to the ADC, acquired, and analyzed. Discrepancies are displayed on screen. When an empty slot is correctly identified, this test displays NA. |

### Diagnostics Selection File

The Diagnostics Selection file allows you to specify the high-level diagnostics that run automatically at power-up. When the VM700A is powered on, the diagnostics selected in the Diagnostics Selection file are run. The contents of the Diagnostics Selection file are shown in Figure 6-2.

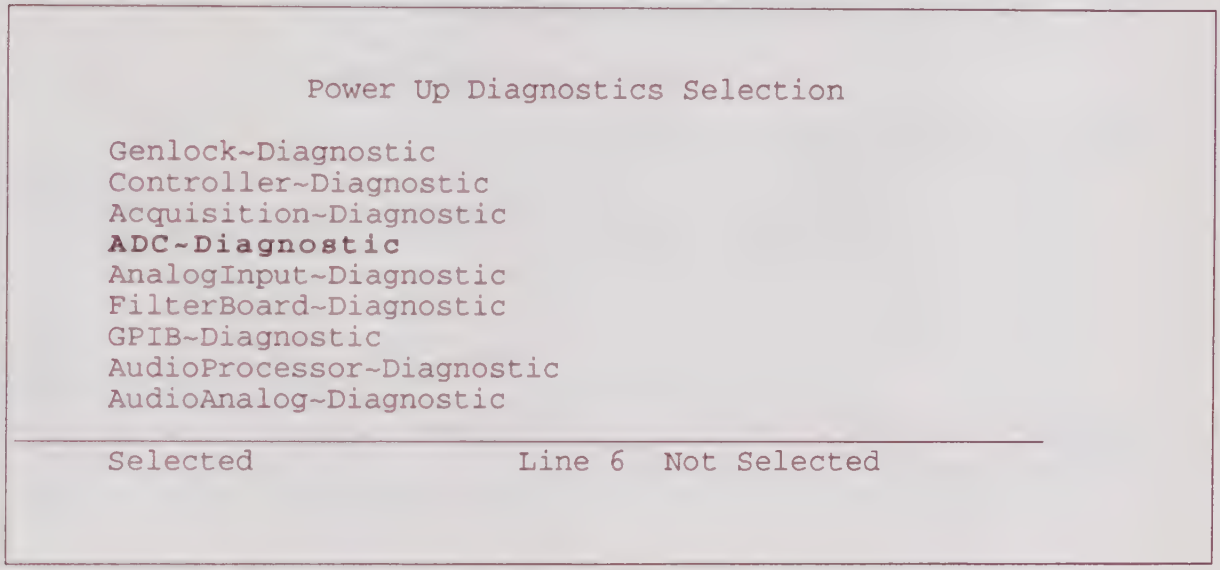


**Figure 6-2. Power-Up Diagnostics Selection Display.[1]**

All diagnostic routines on the "Selected" side execute at power up. To select or unselect a diagnostic from the Diagnostics Selection file:

1. Press the Configure button.
2. Press the Configure Files softkey.
3. Select the Diagnostics Selection file.
4. Turn the control knob until the diagnostic's name is highlighted. Touching the vertical center of the left half of the screen selects the highlighted diagnostic; touching the vertical center of the right half unselects it.
5. Press the Update & Exit softkey to write out (save) any changes to the file; press the No change & Exit softkey to leave the file as it was when it was last saved.

### Running User-Selectable Diagnostics on Power-Up

When the VM700A is powered on, the diagnostic routines selected in the Diagnostics Selection file run automatically after the low-level diagnostics are completed.

[1]The AudioProcessor~Diagnostic and AudioAnalog~Diagnostic selections are available only with the VM700A Audio option. The GPIB~Diagnostic selection is available only with the VM700A GPIB Interface Option.

### Bypassing User-Selectable Diagnostics on Power-Up

You may bypass the power-up diagnostics. Doing so shortens the power-up sequence, but it also prevents the VM700A from performing self tests at power-up. To bypass all power-up diagnostics (both low-level and high-level), press and hold the Waveform button when you power up the VM700A. If the VM700A is being started cold, hold the button for three to five seconds; if the VM700A is already warmed up, one or two seconds should do it.

The VM700A displays the message:

*—*—*—INITIALIZING IN QUICK START MODE—*—*—*

then proceeds with system initialization.

To bypass each user-selectable diagnostic, press the Abort Diagnostic softkey when that diagnostic is running. The VM700A proceeds to the next selected diagnostic in the Diagnostics Selection file. After the last selected diagnostic either runs or is aborted, the VM700A proceeds with system initialization.

### Running Individual Diagnostics

You may run individual, user-selectable diagnostics on demand either by pressing the Measure button during normal instrument operation or by powering the instrument up with the Measure button held in.

To run a specific diagnostic during normal instrument operation:

1. Press the Measure button.
2. Press the Diags soft key.

The contents of the VM700A Diagnostics directory are displayed. They include the user-selectable diagnostics available on power-up (listed in the Diagnostics Selection file), the DiagsLoop routine (described later in this section), and the routines AdcGain Adjustment, CalDAC adjustment, Measure Sine wave, and Measure Square wave (described in the section *Verification and Adjustment*, elsewhere in this manual).

Each diagnostic consists of a series of tests, and each series is organized into test families. When running individual diagnostics, you have two display choices: Power-Up Mode and Interactive Mode. These are described below.

To run a diagnostic, touch the icon representing that diagnostic in the directory window. When each diagnostic starts, you are prompted to select a run mode from the softkeys at the bottom of the screen. The available choices are:

**Power-Up Mode** Runs the selected diagnostic the same way it would run during power-up. Power-Up Mode, when selected, displays the Change Run Mode softkey. Touching the Change Run Mode softkey returns you to the SELECT RUN MODE screen.

Power-Up Mode displays a line for each family of tests that passes. If any of the tests within the family fail, Power-Up Mode pauses, displays a list indicating which tests passed or failed, then displays two additional softkeys labeled Continue and Rerun Test. Continue resumes the diagnostic. Rerun Test repeats execution of the test family. Certain of the diagnostics will also display the message Automatically Continues in 60 Seconds after a failure and count down as the time elapses.

When all the tests within a diagnostic routine have been completed, the Select Run Mode screen is displayed.

**Interactive Mode**

Provides a greater level of detail for most tests within a diagnostic routine than Power-Up Mode. Interactive Mode, when selected, displays the Change Run Mode softkey. Touching the Change Run Mode softkey returns you to the SELECT RUN MODE screen.

Interactive Mode lists all tests within each test family, and indicates whether each test passed or failed. Upon completion of each family of tests, Interactive Mode pauses and displays two additional softkeys, labeled Continue and Rerun Test. Continue resumes the diagnostic. Rerun Test repeats execution of the test family.

When all the tests within a diagnostic routine have been completed and the Continue softkey is selected, the Select Run Mode screen is displayed.

### Running User-Selectable Diagnostics Continuously (DiagsLoop)

You may, at times, want to run the user-selectable diagnostics continuously. Continuous (or looped) diagnostics are useful if you are looking for intermittent errors. The DiagsLoop application is located in the VM700A Diagnostics directory. DiagsLoop repeatedly runs the diagnostic routines selected in the Diagnostics Selection file.

DiagsLoop displays the same level of information as the Power-Up Mode of individual diagnostic execution, but DiagsLoop does not pause when failures occur. Results from all failed tests are written to the Diagnostic Errors file. To stop DiagsLoop execution, press the Abort Looping softkey.

### The Diagnostic Errors File

When user-selectable diagnostics are run at power-up or during DiagsLoop, all errors detected are written to the Diagnostic Errors file, found in directory /nvram0/ConfigFiles. The Diagnostic Errors file is automatically created when an error is detected by user-selectable diagnostics. The contents of this file may be printed using the Print File softkey.

*NOTE*

*The maximum capacity for the Diagnostic Errors file is 100 lines. If the number of errors detected produces a longer file, the earliest results are scrolled out, and a message stating that fact is included.*

### Auto Reset (Running All Diagnostics)

If a malfunction causes the VM700A to reinitialize during normal operation, the VM700A tries to initialize in Auto Reset mode. This mode forces execution of all diagnostics, both low- and high-level, regardless of the state of the Diagnostics Selection file.

### Forcing Auto Reset

If all diagnostic routines in the Diagnostics Selection file are set to Not Selected, no diagnostics run at power up . If the VM700A does not complete system initialization because of a fault, the diagnostics are not available to assist in isolating the problem. In this case, you can use the following procedure to force Auto Reset mode to ensure that all diagnostic routines run at power up, regardless of the state of the Diagnostics Selection file.

To force Auto Reset mode:

1. Power off the VM700A.
2. Press and hold the Auto button and power on the VM700A.
3. After about 5 seconds, release the Auto button.

The VM700A runs all low-level and user-selectable diagnostics when you force Auto Reset.

## Viewing Diagnostics Remotely via the RS-232C Serial Port

You will not be able to view diagnostic results if the VM700A display either is not operating or is operating improperly. The VM700A supplies a method, known as Debug mode, to view diagnostic results on a terminal or PC should the display be malfunctioning.

In Debug mode, the VM700A redirects the low-level diagnostics display data to the rear panel PORT 0 serial connector. To view the diagnostics you must connect a terminal or PC to PORT 0. If you connect a PC, you must also run a terminal emulator program on the PC to read the VM700A's output.

### Connecting a Terminal or PC

The VM700A has two RS-232C DTE serial ports on its rear panel (see Figure 6-3). These serial ports can be used to send graphics and reports to a printer, for remote operation via a modem, or for viewing diagnostics by direct serial connection to an RS-232C device such as a terminal. Both serial port 25-pin male D connectors are located on the A5 CPU board and are accessible from the rear panel of the instrument, as shown in Figure 6-3.

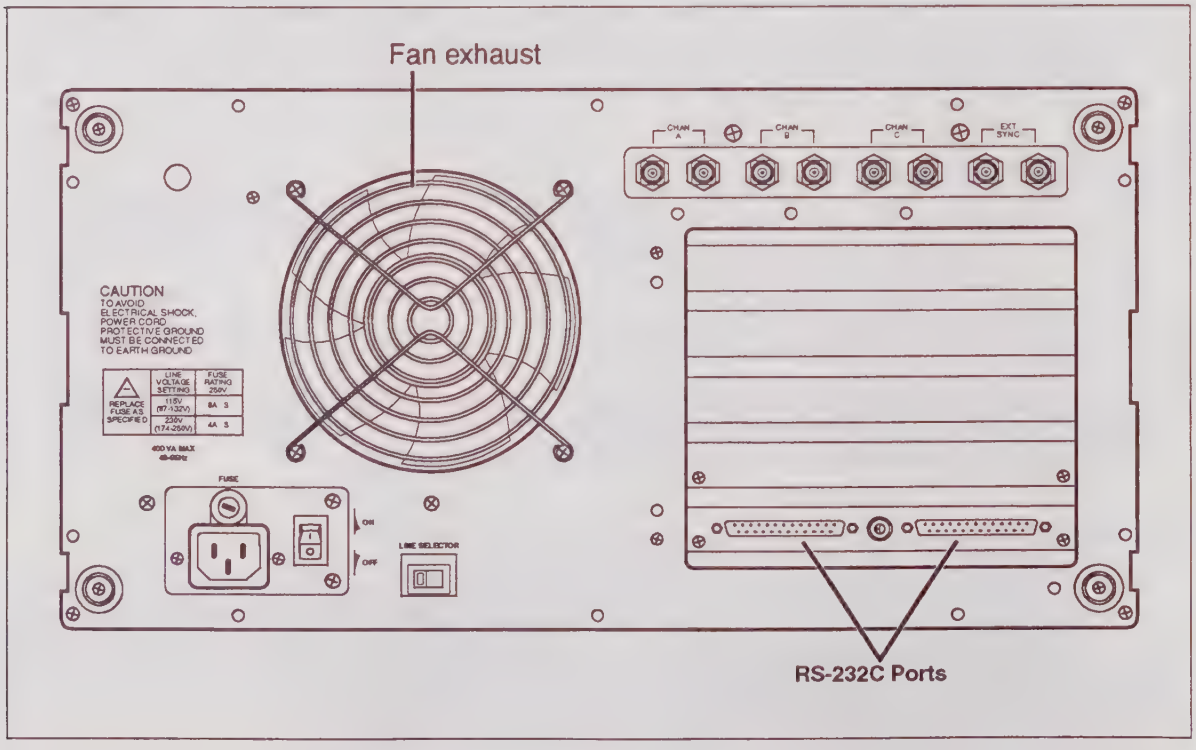


**Figure 6-3. VM700A Rear Panel.**

The Communications Setup file (located in the Configure Files directory) contains the parameter settings for the serial ports. Typical Communications Setup choices for VM700A-to-PC communications are:

| Parameter | Selection | Parameter | Selection |
|---|---|---|---|
| Protocol | None | Parity | None |
| Baud Rate | to match PC | Reset Character | Disabled |
| Flow Control | XON/XOFF | Carrier Detect | Disabled |
| Character Size | 8 | | |

### *NOTE*

*Not all RS-232C devices use control lines as described in this section. Refer to the instruction manual of the equipment you are connecting (for example, a terminal) to the VM700A to determine exactly how it should be connected.*

Table 6-4 lists cable configurations that should work in most cases. The pin numbers listed for the Terminal (DTE) are the most common locations for the corresponding signals.[1]

**Table 6-4**
**Typical RS-232C Cable Wiring**

| VM700A (DTE) to Terminal (DTE) | | VM700A (DTE) to Modem (DCE) | |
|---|---|---|---|
| VM700A Pin No. | Terminal Pin No. | VM700A Pin No. | Modem Pin No. |
| 1 | 1 (Chassis GND) | 1 | 1 |
| 2 | 3 (RX) | 2 | 2 |
| 3 | 2 (TX) | 3 | 3 |
| 4 | 5 (CTS) | 4 | 4 |
| 5 | 4 (RTS) | 5 | 5 |
| 7 | 7 (Signal GND) | 7 | 7 |
| 20 | 6 (DSR)[a] | 8 | 8 |
| | | 20 | 20 |

[a]This connection may not be needed

### Serial Port Signal Description

This section describes the signals the VM700A transmits and the input signals it requires on all active serial port pins.

Pin 1 — Chassis Ground

Pin 2 — TX (Transmit Data). The VM700A transmits data on this pin.

---

[1] Both ends of a DTE-to-DTE cable are usually female DB-25 connectors. However, the DTE-to-DCE cable is female on the DTE (VM700A) end, and usually male on the DCE (modem) end.

Pin 3 — RX (Receive Data). The VM700A receives data on this pin.

Pin 4 — RTS (Request To Send [data to the VM700A])

- With Flow Control: CTS/RTS selected, RTS normally connects to the CTS line of a terminal and is active when the VM700A is ready to receive data. When the receive buffers are nearing capacity, RTS goes inactive, indicating to the sending device to stop transmitting data to the VM700A. Conversely, when the receive buffers are nearly empty, RTS goes high, telling the sending device to resume sending data to the VM700A. This process continues until data transfer is completed.
- With Flow Control: None or XON/XOFF selected, RTS is always active.

Pin 5 — CTS (Clear To Send)

- With Flow Control: CTS/RTS selected, the VM700A is enabled to transmit data by a high level on pin 5 and is disabled by a low level. Pin 5 is normally connected to the RTS line of a terminal.
- With Flow Control: None or XON/XOFF selected, the VM700A transmits data regardless of the CTS level.

Pin 7 — Signal Ground

Pin 8 — CD (Carrier Detect). This signal typically comes from a modem and indicates that a phone connection is made.

Pin 20 — DTR (Data Terminal Ready). This pin is always high when the VM700A is powered on. Modems typically require this signal to be a high level to answer the phone.

If you are connecting a PC to the VM700A, you will also have to run a terminal emulator program in order to read what the VM700A outputs.

### Entering Debug Mode

If the front panel buttons are not operating, you may enter Debug mode using this procedure:

1. Switch the VM700A power off.
2. Remove the VM700A from the equipment rack (if rack-mounted).
3. Remove the two screws from the rear panel that retain the left side cover (viewed from the front of the instrument).
4. Slide the left side cover about two-thirds of the way back.
5. On the A5 CPU board (bottom board) locate the six-section DIP switch with the markings "FAC|MODE|" printed on the circuit board in front of it.
6. Set the three rightmost switches (nearest the front of the instrument) to the UP position to enable Debug mode.
7. Power on the VM700A.

If the front panel buttons are operating, you may enter Debug mode using this procedure:

1. Power off the VM700A.
2. Press and hold the Help push button while powering the VM700A on.
3. After about 5 seconds, release the Help push button.

The terminal or PC displays the same menu (shown below), regardless of how you enter Debug mode.

In Debug mode, diagnostic information is redirected to serial port 0. To direct Debug mode output to PORT 1, set the switch above the "C" on the "FAC|MODE|" DIP switch to the UP position.

### Running Diagnostics in Debug Mode

When the VM700A first enters Debug mode, the menu shown in Figure 6-4 appears on the terminal screen:

```
                        -- DEBUG MODE --

Key          Selection
(N) ... Boot Instrument in NORMAL (Power Up) mode
(A) ... Boot Instrument in AUTO RESET mode
(Q) ... Boot Instrument in QUICK START mode
(T) ... Run TOUCHPANEL Calibration
(D) ...  -CLEAR-  FileSystem Nvram

(1) ... Run CPU Board Diagnostic
(2) ... Run Display/FP Board Diagnostic
(3) ... Run Main Rom Board Diagnostic

(H) ... Run Instrument in HIGH LEVEL DEBUG mode

(-) ... Reprint Menu

*** Press one of the indicated keys ***
```

**Figure 6-4. Debug Mode Display Viewed from a Terminal or PC.**

The following options are available from within Debug mode by pressing the indicated key:

**N - Normal (Power-Up) Mode** – causes the VM700A to initialize as though the instrument was just powered up. This mode runs the low-level diagnostics, starts the operating system, then runs all high-level diagnostics specified in the Diagnostics Selection file.

**A - Auto Reset Mode** – executes all user-selectable diagnostic routines, regardless of the state of the Diagnostics Selection file. This mode operates just like Normal (Power-Up) Mode, except all high-level diagnostics are run.

**Q - Quick Start Mode** – initializes the VM700A (or attempts to) without running any diagnostics, low- or high-level.

**T - Touch Panel Calibration** – runs a routine that calibrates the touch panel to compensate for changes in thermal environment.

**D - Debugger** – Intended for factory service personnel only.

**C - CLEAR- FileSystem Nvram** – restores the file system to its original factory configuration.

CAUTION

*Any changes made to the NVRAM file system will be lost if option (C) is selected.*

**1 (CPU Board), 2 (Display/FP Board), 3 (Main Rom Board)** – These selections run the specified low-level diagnostics in a manner similar to the Interactive mode of user-selectable diagnostics. Upon completion of each test, the VM700A pauses with the prompt message:

**** PRESS A TERMINAL KEY TO CONTINUE ****

While each low-level diagnostic runs in Debug mode, the terminal display is nearly identical to the corresponding VM700A display during a normal (non-Debug mode) power-up. When the diagnostic routine completes all its tests, the terminal displays the Debug mode main menu once more.

**H - High Level Debug Mode** – powers up the VM700A without running any diagnostics, and takes you straight to the /nvram0/VM700A Diagnostics directory. From this point, you can run any diagnostic, or use the softkeys to get to the Console or Diagnostic Error files.

*NOTE*

*If you want to use the VM700A after running it in High Level Debug mode, power the instrument down and start it back up again normally to guarantee that all internal constants set during the power-up procedure are correct.*

### Serial Port Setup for Low-Level Diagnostics, Debug Mode

In Debug mode, the low-level diagnostics use the four possible settings of two jumpers on the A5 CPU board to determine the transmit and receive baud rates when the instrument is initialized. Table 6-5 specifies the baud rates available with these jumpers.

**Table 6-5**
**A5 CPU Board Jumper Settings**

| Jumper 1 (J308) | Jumper 2 (J307) | Transmit Baud Rate | Receive Baud Rate |
|---|---|---|---|
| On | On | If settings are stored in non-volatile memory (Communication Setup file), they are used. Otherwise, both transmit and receive default to 19,200 baud. | |
| On | Off | 19200 | 19200 |
| Off | On | 300 | 19200 |
| Off | Off | 300 | 300 |

*NOTE*

*When you use one of the non-default jumper states (i.e., J307 or J308 set to OFF), the following communication parameter settings are used: protocol none; character size 8; flow control XON/XOFF; parity none; reset character none.*

## Viewing Stored Diagnostic Information

If the VM700A diagnostics detect a problem, the Console and the Diagnostic Errors files may contain information useful for troubleshooting a problem (the Diagnostic Errors file was explained previously).

### The Console File

Whenever the VM700A initializes, information is stored in the console file, located in the / directory (the topmost). If a malfunction causes the VM700A to auto reset, the console file could contain useful information. You can use the Print File softkey to make a copy of the console file. The console file is rewritten each time the VM700A is powered on.

After comparing the failure symptoms with the information in Table 6-1 and running the self-test diagnostics, you may use the removal and replacement procedures (see Section 3: *Removal and Replacement Procedures*) to remove and replace the faulty module. Return faulty VM700A modules to your Tektronix service center for exchange.

## Troubleshooting the CPU Board

The CPU board has 8 status LEDs that are used by the low-level diagnostics to display error codes. These status LEDs can be viewed by removing the left-side instrument cover. The following errors are displayed by the status LEDs (O is lit; X is off):

| Code | Description |
|---|---|
| OOOOOOOO | No Error (normal operation) |
| OXXXXXXX | mDelay() routine failed (this routine uses the real-time clock to calibrate a counter for short time delays) |
| XXXXXXXO | Real-time clock failure: clock not running |
| XXXXXXOX | Real-time clock failure: clock running too fast |
| XXXXXXOO | Real-time clock failure: clock running too slow |
| XXXXXOXX | Real-time clock failure: invalid data returned from clock chip |

## Troubleshooting the Power Supply

The VM700A power supply is a 100 kHz switching supply capable of delivering more than 350 watts. The power supply is not field repairable. Repairs to the VM700A for power supply problems are done by board exchange. For information on exchanging this or other VM700A modules, see *Exchanging VM700A Modules* earlier in this manual.

You may view the indicators by sliding the right-side instrument cover back about 8 inches and looking through the metal cutout provided. The 4 red and 6 green LEDs supply the information listed in the table. A short in a power supply circuit is indicated when the associated green status LED fails to light.

| Red LEDs | Green LEDs[a] |
|---|---|
| Under volts (UV) | –15.0 V |
| Over volts (OV) | –5.2 V |
| Over Current (OI) | 5.0 V |
| Over Temp (OT) | 12.0 V |
| | 15.0 V |
| | 18.0 V (Keep Alive) |

[a]A short in a circuit is indicated when the associated green status LED fails to light.

### Isolating a Power Supply Fault

1. Determine if the fault is caused by the power supply or by an external loading problem such as a shorted circuit board or reversed connector. Experiment by removing circuit boards one at a time to see if the power supply operates or status lights change.
2. If the power supply operates only with all circuit boards disconnected, either the supply can't deliver power to its load or the external load exceeds the rated specifications.
3. Exchange the power supply module and retest.

**WARNING**

*High voltages are present inside the VM700A chassis. These voltages can cause serious injury. Leave all service procedures that require removing instrument covers to qualified service personnel.*

### Interpreting the Red Fault LEDs on the Power Supply

#### UV and OV

Lighted under-voltage (UV) and over-voltage (OV) LEDs usually indicate a power supply failure. To check for this condition isolate the power supply from the instrument (remove boards and disconnect the cables to the power supply) to verify whether the fault is in the supply or outside. When you locate the problem module, return it for repair.

For information on removing boards or power supply cables, see Section 3, *Removal and Replacement Procedures*.

#### OI

A lighted over-current LED (OI) can be caused by an external load greater than the supply can deliver, or by failure of the supply to deliver its rated load. To check for this condition, remove instrument circuit boards and cycle the power off and on to determine if the fault is caused by a shorted component on a circuit board. If the over-current fault goes away after you remove a board or cable assembly from the instrument, that assembly is probably the faulty module. Return it for replacement or repair.

#### OT

A lighted over-temperature LED (OT) is also displayed on the instrument's front panel on-off switch plate.

Constant air flow is needed to keep power supply temperatures in an operational range. The power supply has a temperature-sense circuit that shuts the unit down before high temperatures can damage sensitive circuits. If the over-temperature LED is lit the following conditions may exist:

- The cooling fan may have failed or wires to the fan may not be connected to the proper drive pins. If the fan fails to run, check for a fan-drive voltage of 12 to 24 volts. Remove the cooling fan power connector at the power supply to see if the voltage on the connector pins is correct. Because the fan operates on 24 Vdc, it can be checked with an external bench supply.
- Air filters in the instrument's front bezel may be clogged, limiting air flow through the instrument and causing a rapid increase in internal temperatures. This may shut the instrument down after about 3 to 5 minutes. Using a mini-vacuum cleaner, remove dust from the filters. For information on cleaning the front bezel air filters, see Section 3, *Cleaning the Touch Screen and Front Bezel Air Filters*.

- The power supply may be overheating because of extreme loading conditions. Check the OI status LED and isolate the faulty load by removing boards and disconnecting power supply cables.
- The fan-drive circuit may be faulty. Check the drive wires to the fan for a 12 to 28 volt drive signal. Remove and replace the power supply if it is faulty.

For information on how to return defective instrument modules to Tektronix for repair, see *Exchanging VM700A Modules* in Section 3.

## Troubleshooting the CRT Display

The display module is a 9-inch diagonal, 640 x 480 pixel, monochrome CRT unit. The display is adjusted at the factory for optimum viewing brightness. The interactive touch screen is attached in front of the CRT. It can be removed for replacement of the touch screen or the display module, if necessary.

If the CRT display fails, the faulty unit must be removed and replaced. Refer to the following procedure to determine if the CRT display is faulty.

### Isolating a CRT Display Fault

Two types of CRT display failures can occur:

- No display (blank screen)
- No display and POWER SUPPLY FAIL LED lit

For no display (blank screen) CRT display symptoms, follow this procedure:

1. Make sure that +12 V is present on pin 7 of the CRT display connector (on the back of the display module). If +12 V is not present, remove the 10-pin drive connector to see if the +12 V comes up. If it does, the CRT display may be loading the power supply.
2. With an oscilloscope, probe pins 6 (horizontal sync), 8 (video), and 9 (vertical sync) of the CRT display connector for valid drive signals.
3. Adjust the brightness and contrast controls on the bottom of the CRT display unit to see if they affect the display.
4. Swap the display memory board (A9) with another display memory board to verify that the fault lies in the CRT display.

For blank screen and lighted POWER SUPPLY FAIL LED symptoms, follow this procedure:

1. Switch the instrument power off at the rear-panel switch.
2. Disconnect the CRT 12 V power connector (P3) at the power supply and switch instrument power on to see if the monitor was loading the power supply. If the POWER SUPPLY FAIL LED is no longer lit with the 12 V cable disconnected, replace the CRT display module.

For information on replacing the CRT display module, see *Removal and Replacement Procedures* in Section 3.

When a CRT display module is replaced, minor adjustments may be necessary to center the display or fine-adjust its brightness level. Refer to Procedure 5: *Adjusting the Display* in Section 4 of this manual if readjustment is needed.

After replacing the touch screen, recalibrate it by holding down the Configure button while switching instrument power on. Follow the instructions on the VM700A display.

# Troubleshooting the Power Supply

The VM700A power supply is a high efficiency switching supply. The Tektronix-manufactured power supply is a direct replacement for the OEM power supply. Circuit diagrams, a circuit description, and an electrical parts list are provided for the Tektronix-manufactured power supply; however, it is not a field repairable module. Field repairs to a VM700A with a power supply problem are done by board exchange. For information on exchanging the power supply or other VM700A modules, see *Exchanging VM700A Modules* in Section 3 of this service manual.

## Front Panel Check

Check the LED indicators over the front panel STBY/ON switch (see Figure 6-5). One red LED is an over temperature warning and the other is a power supply failure indicator. If the green Power indicator is on, primary power is applied, the line fuse is good, and the housekeeping voltage supply is operating. If no indicators come on, either the primary power circuitry has failed or the master ON/OFF switch is OFF. Check the line fuse and the master ON/OFF switch to make sure it is on. Also make sure the Line Voltage Selector switch is set to the correct supply voltage. If the Line Voltage Selector was not set to the correct setting, the fuse may have opened. If the line fuse is good, the master switch is ON, the Line Voltage Selector set correctly, and the power supply still does not operate, troubleshoot the power supply.

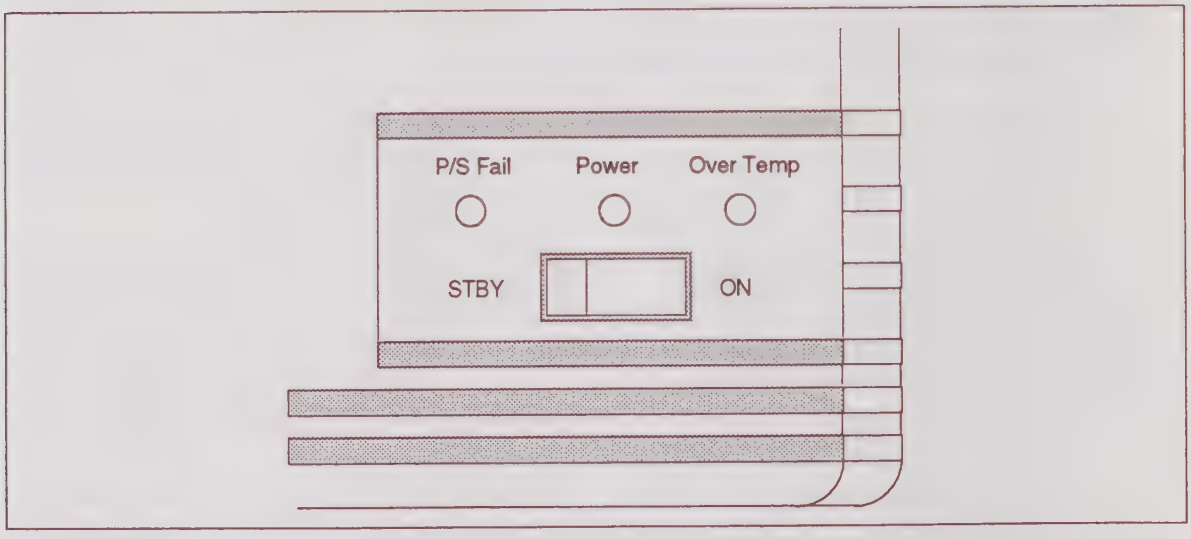


**Figure 6-5. Front-panel power supply and over temperature indicators.**

If the Over Temp indicator is on and the instrument is still operating, then an over temperature condition exists. If the temperature continues to rise a power supply shutdown may occur. The over temperature warning occurs at about 50°C, and the power supply will shut down at about 60°C. The ambient temperature may be too high to operate the VM700A or the flow of cooling air is cut off or restricted. The VM700A should be shut off to let it cool down before a shutdown occurs.

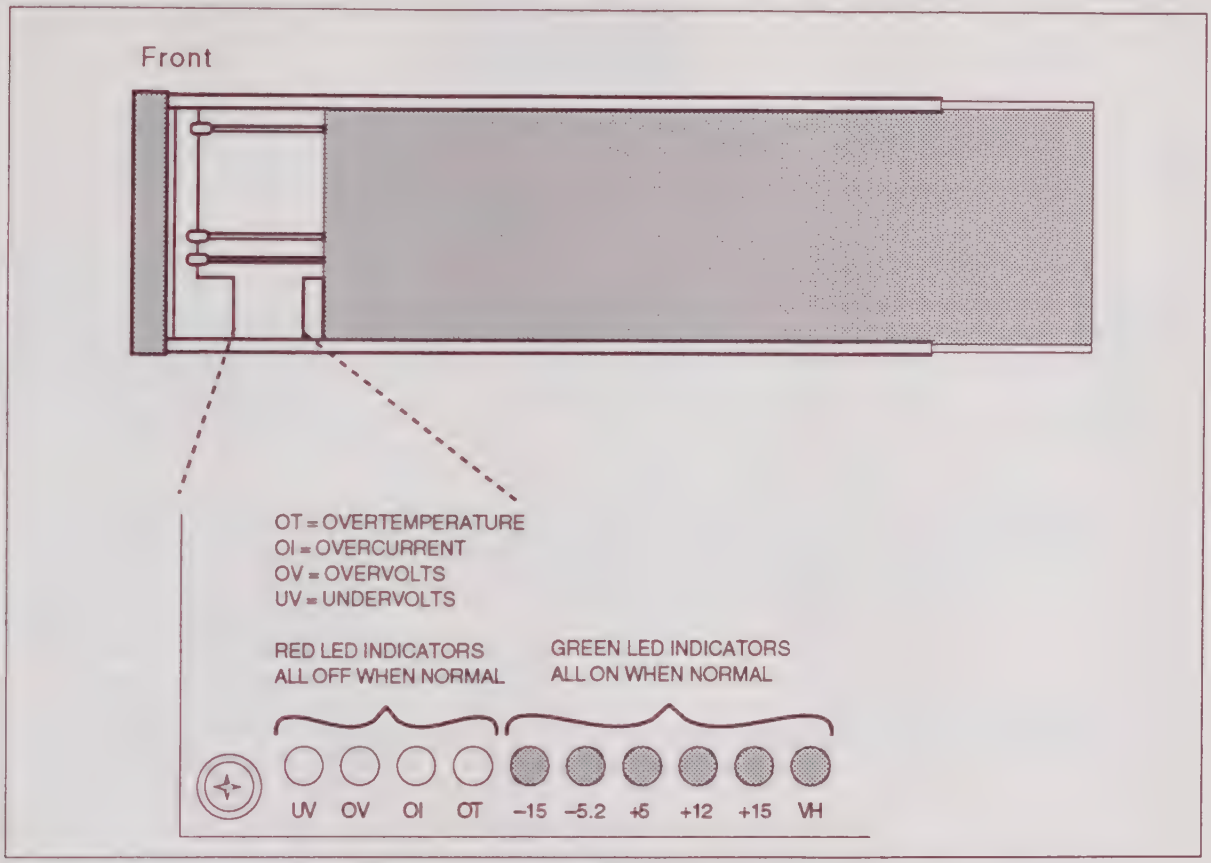


**Figure 6-6. Power Supply LED indicators.**

## Internal Check

If the PS Fail indicator is on, there is a power supply problem. Turn off the master ON/OFF switch on the rear panel of the VM700A and remove the holding screws from the right side (as viewed from the front) cover. Slide the cover back about 8 inches to gain visual access to the power supply LED indicators. Locate the power supply LED indicators near the front at the bottom of the chassis (see Figure 6-6). Turn the master ON/OFF switch back ON.

### Checks

Check that the VH (housekeeping supply) LED indicator comes on (see Figure 6-6). If it does not come on, replace the power supply. See Section 3, *Removal and Replacement* procedures for removal of the power supply.

Check the green LED indicators on the power supply. Each voltage supply is provided with an indicator to show that the associated voltage is up. All the green indicators should be on for normal operation of the power supply.

Check that none of the RED indicators are lit. If any are on, a power supply problem is indicated.

If the VH (housekeeping voltage) LED is on and the other green voltage indicators are flashing on and off, check the status of the OI (over current) LED.

If the OI LED is flashing or on solid, there may be excessive loading on the power supply by the VM700A circuitry. See Table 6-6 for checks and actions for the various trouble indications.

**CAUTION**

*Turn off the VM700A before removing or installing any circuit board.*

**Table 6-6**
**Power Supply Trouble Indicators**

| Indicator | Check | Action |
|---|---|---|
| Undervoltage LED on | Check Supply LED indicators to check for a missing supply voltage. | Replace power supply using board exchange. For information on how to return defective instrument modules to Tektronix for repair, see *Exchanging VM700A Modules* in Section 3. |
| Over Voltage LED on | Check that all the green Supply LED indicators are off except the VH LED. The supply will be in shutdown mode. | Turn the master ON/OFF switch off and back on to recycle the power supply shutdown control circuitry. Check that the power supply operates normally after power is reapplied and the front-panel STBY/ON switch is turned on. If not, replace the power supply. |
| Over Temperature LED on | Check Supply LED indicators to see if an over temperature shutdown has occurred. The green LED indicators for the supply will be on if a shutdown has not yet occurred. Check that the fan is operating.<br><br>Over temperature shutdown of the supply will occur at about 10°C over the warning temperature. At that point, all the green power supply indicators except the VH LED will be off. | Turn off the master ON/OFF switch and let the VM700A cool down before restarting the power. When the power comes back on check that the fan operates and that the power supply operates correctly.<br><br>Check the air filters in the instrument's front bezel. If they become clogged, the lack of air flow may cause overheating. Use a mini-vacuum cleaner to remove the dust from the filters. For more information on cleaning the front bezel air filters, see Section 3, *Cleaning the Touch Screen and Front Bezel Air Filters.* |
| Over Current LED on | Check for flashing supply LED indicators. | Check for possible excessive loading on a power supply by the VM700A. Troubleshoot the VM700A for excessive loading problems. Circuit boards may be unplugged, one at a time, to check for board related loading. If the over current fault goes away after you remove a circuit board or disconnect a cable assembly from the instrument, that circuit board may be the faulty module. Replace with a known good module to check. Return a faulty module for replacement or repair.<br><br>Minimum load to maintain operation of the power supply is 30 W total including at least a 10 W (2A) load on the +5.1 V supply. |

**WARNING**

*High voltages present inside the VM700A chassis can cause serious injury. All service procedures that require removing instrument covers should be done only by a qualified service person.*

## Power Supply Voltage and Ripple Checks

To check the power supply for voltage and ripple tolerances, the bottom cover of the VM700A must be remove. Turn off the VM700A, and remove the bottom cover. Use Figure 6-7 to locate the power supply voltage test points.

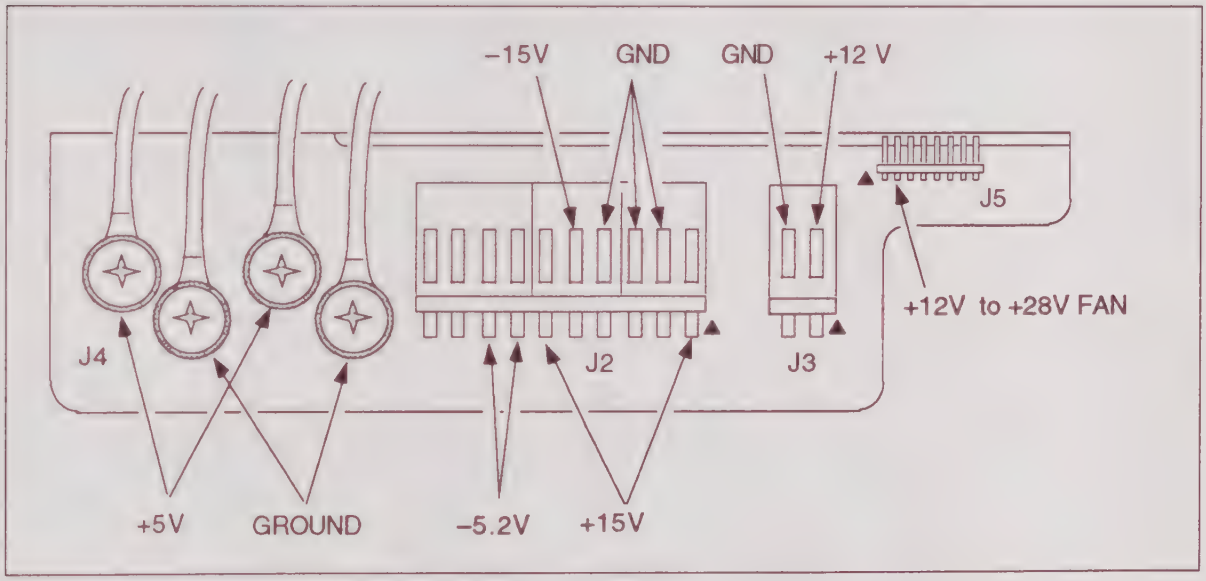


**Figure 6-7 Power Supply test points.**

**Table 6-7**
**Power Supply Voltages**

| Voltage | Tolerance @ Standard Load | P.A.R.D. Max[a] (mV) (Ripple) | Circuitry Supplied |
|---|---|---|---|
| +5 Vdc | ±1% @ 18A | 150 | TTL Logic |
| +15 Vdc | ±2% @ 1 A | 120 | Analog |
| –15 Vdc | ±2% @ 1.2 A | 120 | Analog |
| +12 Vdc | ±2% @ 1 A | 150 | Display |
| 12 to 30 Vdc | | | Fan Drive |
| –5.2 Vdc | ±3% @ 5 A | 150 | ECL Logic |
| VH | 14.4 V @ 50 mA[b] | | Control Circuitry |

[a] Total Periodic and Random Deviations (Pard) measured at the power supply output connector includes peak-to-peak noise, ripple, switching spikes, etc., within a bandwidth from 5 Hz to 20 MHz.

[b] The housekeeping voltage (VH) is 11.4 V before the rest of the power supply comes on line.

# Appendix A
# DEFAULT JUMPER AND SWITCH SETTINGS

The following table lists the default jumper and switch settings for each of the VM700A's circuit boards.

**Table A-1**
**VM700A Factory Default Jumper and Switch Settings**

| Board | Jumper or Switch No. | Purpose | Description | Default |
|---|---|---|---|---|
| A1 Analog | J555 | Factory Test | Output null | 2,3 |
| | J924 | Factory Test | Output null 1 | 1,2 |
| | J955 | Factory Test | Output null 2 | None or 2,3 |
| A2 Genlock | J318 | Factory Test | Control voltage disable | 1,2 |
| | J573 | Factory Test | Decoded frame disable | 1,2 |
| | J779 | Factory Test | Coarse correction defeat | 1,2 |
| A3 ADC | J246 | Factory Test | Error correction disable | 2,3 |
| A4 Filter Switch | J712 | Factory Test | Input null | 2,3 |
| A5 CPU | J307, J308 | Baud rate setting | See user manual | Both On |
| | S405 | FAC mode | See service manual | All down |
| A6 EPROM | S196 | Factory Set | Block select | 1,3,4,5 Open<br>2,6 Closed |
| A7 Acquisition | S941 | Factory Set | Board Address | 4,5 Open<br>1,2,3,6,7,8 Closed |

# Appendix B
# SPECIFICATIONS

## PHYSICAL CHARACTERISTICS

| | |
|---|---|
| Dimensions (WxHxD) | 19.0 x 8.75 x 21.9 (483mm x 222mm x 556mm) |
| Weight | 45 lb (20 Kg) |

## POWER REQUIREMENTS

| | |
|---|---|
| Mains Voltage | 87 to 137 VAC (115 VAC nominal) |
| | 174 to 250 VAC (230 VAC nominal) |
| Mains Frequency | 47 to 63 Hz |
| Power Consumption | 250 Watts |

## REMOTE RELAY

| Characteristic | Description |
|---|---|
| Remote Contact Closure Relay | Contacts are not debounced |
| Maximum Current | 50 mA |
| Maximum Voltage | 30 Vac rms or 30 Vdc |
| Control Logic | set GRLY 1 closes the relay.<br>set GRLY 0 opens the relay. |

## ENVIRONMENTAL

Operating Temperature Range: 0 to 50°C ambient

## PAL MEASUREMENT SPECIFICATIONS

This section lists the specifications for each PAL measurement. The accuracies shown for measurements with averaging capabilities assume the default averaging factor of 32.

All accuracies shown for measurements with "relative mode accuracy" assume that an averaging factor of 256 was used to create the reference.

# Measure Mode

## Bar Line Time

| Measurement | Range | Absolute Mode Accuracy | Relative Mode Accuracy |
|---|---|---|---|
| Bar Level (b1 or Back Porch) | 300 mV to 1.4 V | ±0.5% | ±0.2% |
| Sync Level | 50 mV to 600 mV | ±0.5% | ±0.2% |
| Sync to Bar Top | 350 mV to 2 V | ±0.5% | ±0.2% |
| Sync/Bar Ratio | 10% to 125% (100% nominal) | ±0.5% | ±0.2% |
| Bar Tilt (Rec 569) | 0 to 20% | ±0.2% | ±0.1% |
| Line Time Distortion (Rec 567) | 0 to 20% | ±0.2% | ±0.1% |
| Bar Width | 10 µs to 30 µs | ±100 ns | NA |

## Bounce

| Measurement | Range | Accuracy |
|---|---|---|
| Peak Deviation | 0 to 50% | ±1% |
| Settling Time | 0 to 10 sec | ±100 msec |

## Burst Frequency

| Measurement | Range | Relative Mode Accuracy |
|---|---|---|
| Burst Frequency | ±100 Hz | ±0.5 Hz |

## Chrominance to Luminance

| Measurement | Range | Absolute Mode Accuracy | Relative Mode Accuracy |
|---|---|---|---|
| Chrominance to Luminance Delay | ±300 ns | ±5 ns | ±1.0 ns |
| Chrominance to Luminance Gain Ratio | 0 to 160% | ±1.0% | ±0.1% |

## Chrominance Noise

| Measurement | Range | Absolute Mode Accuracy |
|---|---|---|
| AM Noise | 20 to 80 dB | 1 dB (20 to 60 dB) |
| PM Noise | 20 to 70 dB | 1 dB (20 to 60 dB) |

### Chrominance Non-Linearity

| Measurement | Range | Absolute Mode Accuracy | Relative Mode Accuracy |
|---|---|---|---|
| Chrominance Amplitude | 0 to 100% | ±1.0% | ±0.5% |
| Chrominance Phase | 0 to 360° | ±1° | ±0.2° |
| Chrominance to Luminance Intermodulation | –50 to +50% | ±0.2% | ±0.2% |

### Color Bar

| Measurement | Range | Absolute Mode Accuracy | Relative Mode Accuracy |
|---|---|---|---|
| Luminance Level | 0 to 700 mV | ±3.5 mV | ±0.2% |
| Chrominance Level (excluding gray and black) | 0 to 700 mV | ±1.0% of nominal | ±0.2% |
| Chrominance Phase | ±180° | ±0.5° | ±0.1° |

### Differential Gain and Phase

| Measurement | Range | Absolute Mode Accuracy | Relative Mode Accuracy |
|---|---|---|---|
| Differential Gain (Minimum, Maximum, Peak) | 0 to 100% | ±0.3% | ±0.03% |
| Differential Phase (Mininum, Maximum, Peak) | 0 to 360° | ±0.3° | ±0.03° |

### Frequency Response and Group Delay

| Measurement | Range | Absolute Mode Accuracy | Relative Mode Accuracy |
|---|---|---|---|
| Frequency Response<br>to 5 MHz<br>to 6 MHz | <br>40 dB<br>40 dB | <br>1.0 dB<br>2.0 dB | <br>0.3 dB<br>0.6 dB |
| Group Delay<br>to 5 MHz<br>to 6 MHz | <br>1.0 µs<br>1.0 µs | <br>20 ns<br>40 ns | <br>5 ns<br>10 ns |

## Horizontal Blanking

| Measurement | Range | Absolute Mode Accuracy |
|---|---|---|
| Blanking Start | 0.1 to 4.2 µs | ±50 ns |
| Blanking End | 6.8 to 12.2 µs | ±50 ns |
| Blanking Width | 6.9 to 16.4 µs | ±50 ns |

## Horizontal Timing

| Measurement | Range | Absolute Mode Accuracy |
|---|---|---|
| Burst Level | 80 to 600 mV | ±1% |
| Horizontal Sync Rise and Fall Time | 80 ns to 1 µs | ±10 ns |
| Horizontal Sync Width | 1 to 8 µs | ±10 ns |
| Burst Width | 1.4 to 3 µs | ±25 ns |
| Sync to Burst Start | 5 to 8 µs | ±25 ns |
| Sync Level | 75 to 600 mV | ±0.5% |

## Incidental Carrier Phase Modulation

| Measurement | Range | Accuracy |
|---|---|---|
| ICPM (requires zero carrier pulse and the quadrature output of the demodulator on Channel C) | 0 to 90° | ±1.0° |

## Jitter

| Measurement | Range | Absolute Mode Accuracy |
|---|---|---|
| Jitter (2 Field) | ±20 ms | ±10 ns |
| Jitter Long Time | ±20 ms | ±10 ns |

## K–Factor

| Measurement | Range | Absolute Mode Accuracy |
|---|---|---|
| 2T Pulse K-Factor | 0 to 10% Kf | ±0.3% |
| KPB | –10 to +5% KPB | ±0.3% |
| Pulse to Bar Ratio | 10 to 125% | ±0.7% |
| Pulse Half Amplitude Duration (HAD) | 100 to 500 ns | ±5 ns |

## Line Frequency

| Measurement | Range | Accuracy |
|---|---|---|
| Line Frequency | ±3% | ±0.1% |
| Field Frequency | ±3% | ±0.1% |

## Luminance Non–Linearity

| Measurement | Range | Absolute Mode Accuracy | Relative Mode Accuracy |
|---|---|---|---|
| Luminance Non–Linearity | 0 to 100% | ±0.4% | ±0.2% |

## Multiburst

| Measurement | Range | Absolute Mode Accuracy | Relative Mode Accuracy |
|---|---|---|---|
| Multiburst Flag Amplitude | 0 to 700 mV | ±0.5% | NA |
| Packets 1–5 (0.5, 1.0, 2.0, 4.0, 4.8 MHz) | –40 to +6 dB | ±0.1 dB | ±0.03 dB |
| Packet 6 (5.8 MHz) | –40 to +6 dB | ±0.2 dB | ±0.06 dB |

## Noise Spectrum

| Measurement | Range | Absolute Mode Accuracy |
|---|---|---|
| Unweighted Signal–to–Noise (5 MHz Low Pass) | –20 to –80 dB | ±0.4 dB (20 to 60 dB)<br>±1.0 dB (60 to 70 dB) |
| Luminance Weighted Signal–to–Noise (5 MHz Low Pass and Unified Weighting) | –20 to –80 dB | ±1.0 dB (20 to 60 dB)<br>±2.0 dB (60 to 70 dB) |
| Chrominance Weighted Signal–to–Noise | –20 to –80 dB | ±1.0 dB (20 to 60 dB)<br>±2.0 dB (60 to 70 dB) |

## SCH Phase

| Measurement | Range | Absolute Mode Accuracy |
|---|---|---|
| SCH Phase | ±90° | ±5° |

### Vertical Blanking

| Measurement | Range | Absolute Mode Accuracy |
|---|---|---|
| Equalizing Pulse Width | 80 ns to 1 µs | ±10 ns |
| Broad Pulse Width | 80 ns to 1 µs | ±10 ns |
| Vertical Blanking Field 1 | 19 to 30 lines | NA |
| Vertical Blanking Field 2 | 19 to 30 lines | NA |

## Auto Mode

### Line Blanking Timing Measurements

| Measurement | Range | Accuracy |
|---|---|---|
| Colour Burst Duration | 6 to 13 cycles (10 cycles nominal) | ±0.1 cycle |
| Front Porch Duration | 0.5 to 3 µs (1.5 µs nominal) | ±20 ns |
| Line Blanking | 9 to 16 µs (12 µs nominal) | ±50 ns |
| Line Sync Rise and Fall Times | 120 to 300 ns<br>300 ns to 1 µs | ±15 ns<br>±30 ns |
| Line Sync | 1.4 to 6.6 µs (4.7 µs nominal) | ±10 ns |
| Sync–to–Start of Burst | 2.2 to 8 µs (5.6 µs nominal) | ±20 ns |
| Burst Duration | 1.4 to 3 µs | ±25 ns |
| SCH Phase | ±90° | ±5° |

### Field Blanking Timing Measurements

| Measurement | Range | Accuracy |
|---|---|---|
| Equalizing Pulse Duration | 1.4 to 20 µs (2.35 µs nominal) | ±10 ns |
| Broad Pulse Separation | 1.4 to 20 µs (4.7 µs nominal) | ±10 ns |

## Other Timing Measurements

| Measurement | Range | Accuracy | ITS Element | Standard |
|---|---|---|---|---|
| Bar Rise Time | 120 to 300 ns<br>0.3 to 1.0 µs | ±20 ns<br>±30 ns | B2 | Measured from 10% to 90% points |

## Amplitude and Phase Measurements

| Measurement | Range | Accuracy | ITS Element | Standard |
|---|---|---|---|---|
| Average Picture Level | 0 to 200% | ±3% | | |
| Sync Amplitude Error | +100 to –50% (300 mV nominal) | ±0.3% of nominal | Live picture area | CCIR Rec. 569 |
| Sync Amplitude Error (with Sound–in–Sync) | +100 to –50% (300 mV nominal) | ±0.3% of nominal | Last broad pulse in field | CCIR Rec. 569 |
| Burst Amplitude Error | +80 to –50% (300 mV nominal) | ±1.0% | Live picture area | CCIR Rec. 569 |
| Chrominance Reference Amplitude Error | –80 to +50% (300 mV nominal) | ±1.0% | D2 | CCIR Rec. 569 |
| Luminance Bar Amplitude Error | ±30 to –70% (700 mV nominal) | ±0.3% | B2 | CCIR Rec. 569 |
| Luminance Bar Amplitude | 200 to 900 mV | ±2.2 mV | B2 | |
| Luminance Bar Amplitude (% of carrier) | 0 to 90% of Maximum Carrier | ±0.3% | B2 and Zero Carrier | |
| Residual Carrier (Bar Top) | 0 to 90% of Maximum Carrier | ±0.3% | B2 and Zero Carrier | |
| Blanking Level | 0 to 90% of Zero Carrier | ±0.2% | Live picture area | CCIR Rep. 624–1 |
| Chrominance–Luminance Gain Inequality | ±75% of bar amplitude | ±1.0% | G1 or G2 | CCIR Rec. 569 |
| Chrominance–Luminance Delay Inequality | ±300 ns (0 ns nominal) | ±5 ns | F or G1 or G2 | CCIR Rec. 569 |
| Sync/Bar Rel. 3/7 | 20 to 110% | ±0.5% | B2 | CCIR Rec. 569 |
| Sync to Bar Top | 0.5 to 2 V | ±0.5% | B2 | CCIR Rec. 569 |
| C/L Gn Err (using modulated Pulse) | ±50% | ±1% | F | |
| Sync Amplitude | 75 to 600 mV | ±2.1 mV | | |
| Burst Amplitude | 75 to 600 mV | ±3 mV | | |
| Burst Amplitude Difference | | ±2% | | |
| Burst Quadrature Error | | ±1° | | |
| Differential Gain (Peak and p–p) | 0 to +100% (0% nominal | ±0.3% | D2 | CCIR Rec. 569 |
| Differential Phase (Peak and p–p) | 0 to 360° (0° nominal) | ±0.3° | D2 | CCIR Rec. 569 |

### Frequency Response Measurements

| Measurement | Range | Accuracy | ITS Element | Standard |
|---|---|---|---|---|
| Multiburst Flag Amplitude | 20 to 130% of bar (60% nominal) | ±0.5% | C1 | CCIR Rec. 567 |
| Multiburst Amplitude | 0 to 200% of flag (100% nominal) | ±1.5% of flag (±2.5% of 5.8 MHz packet) | C2 | CCIR Rec. 567 |

### Waveform Distortion Measurements

| Measurement | Range | Accuracy | ITS Element | Standard |
|---|---|---|---|---|
| Baseline Distortion | 50% of bar | ±0.3% | B1 | CCIR Rec. 569 |
| 2T Pulse/Bar Ratio Error | +25 to –90% (0% nominal) | ±0.5% | B1 | CCIR Rec. 569 |
| 2T Pulse K–factor | 0 to 10% Kf (0% Kf nominal) | ±0.3% Kf | B1 | CCIR Rec. 569 |
| Bar Tilt (End Points) | 0 to +40% (0% nominal) | ±0.2% | B2 | CCIR Rec. 567 |
| Bar Tilt (Peak–to–Peak) | 0 to +40% (0% nominal) | ±0.2% | B2 | CCIR Rec. 567 |
| Line Time Distortion | 0 to 40% of bar | ±0.2% | B2 | CCIR Rec. 560 |
| Bar Tilt (Rec 569) | 0 to 40% of bar | ±0.2% | B2 | CCIR Rec. 569 |
| Field Time Distortion | 0 to 35% | ±0.5% | Field Square Wave | |
| Chrominance–Luminance Intermodulation | ±50% (0% nominal) | ±0.2% | G1 or G2 | CCIR Rec. 569 |
| Luminance Non–linear Distortion | 0 to 50% (0% nominal) | ±0.4% | D1 | CCIR Rec. 569 |

### Low Frequency Error

| Measurement | Range | Accuracy | Standard |
|---|---|---|---|
| Low Frequency Error (Reported as: CCIR LF Error 50–550 Hz LF Error 10–1000 Hz LF Error) | 0% to 25% (0% nominal) | ±0.8% | CCIR Rec. 569 |

## Noise Measurements

| Measurement | Range | Accuracy | Standard |
|---|---|---|---|
| Unweighted SNR (567) | 26 to 60 dB<br>61 to 70 dB | ±1.0 dB<br>±2.0 dB | Measured on one quiet line per CCIR Rec. 567 |
| Luminance Weighted SNR (567) | 26 to 60 dB<br>61 to 70 dB | ±1.0 dB<br>±2.0 dB | Measured on one quiet line per CCIR Rec. 567 |
| Chrominance Weighted SNR | 26 to 60 dB<br>61 to 70 dB | ±1.0 dB<br>±2.0 dB | Measured on one quiet line per CCIR Rep. 637–2 |
| Periodic SNR | 26 to 60 dB<br>61 to 70 dB | ±1.0 dB<br>±2.0 dB | Measured on one quiet line per CCIR Rep. 637–2 |
| Unweighted SNR (569) | 26 to 60dB<br>61 to 70 dB | ±1.0 dB<br>±2.0 dB | Measured on one quiet line per CCIR Rec. 569 |
| Luminance Weighted SNR (569) | 26 to 60 dB<br>61 tp 70 dB | ±1.0 dB<br>±2.0 dB | Measured on one quiet line per CCIR Rec. 569 |

## Incidental Carrier Phase Modulation (ICPM)

| Measurement | Range | Accuracy |
|---|---|---|
| ICPM (requires zero Carrier Pulse and the quadrature output of the demondulator on Channel C) | 0 to 30° | ±1.0° |

## NTSC MEASUREMENT SPECIFICATIONS

This section lists the specifications for each NTSC measurement. The accuracies shown for measurements with averaging capabilities assume the default averaging factor of 32.

All accuracies shown for measurements with "relative mode accuracy" assume that an averaging factor of 256 was used to create the reference.

### Bar Line Time

| Measurement | Range | Absolute Mode Accuracy | Relative Mode Accuracy |
|---|---|---|---|
| Bar Level | 50 to 200 IRE | ±0.5% | ±0.2% |
| Sync Level | 20 to 80 IRE | ±0.5% | ±0.2% |
| Sync to Bar Top | 70 to 280 IRE | ±0.5% | ±0.2% |
| Sync/Bar Ratio | 10% to 125% (100% nominal) | ±0.5% | ±0.2% |
| Bar Tilt (Rec 569) | 0 to 20% | ±0.2% | ±0.1% |
| Line Time Distortion (Rec 567) | 0 to 20% | ±0.2% | ±0.1% |
| Bar Width | 10 µS to 30 µS | ±100 ns | NA |

### Bounce

| Measurement | Range | Accuracy |
|---|---|---|
| Peak Deviation | 0 to 50% | ±1% |
| Settling Time | 0 to 10 sec | ±100 msec |

### Burst Frequency

| Measurement | Range | Relative Mode Accuracy |
|---|---|---|
| Burst Frequency Error | ±100 Hz | ±0.5 Hz |

### Chrominance–to–Luminance Gain and Delay

| Measurement | Range | Absolute Mode Accuracy | Relative Mode Accuracy |
|---|---|---|---|
| Chrominance to Luminance Delay | ±300 ns | ±5 ns | ±1.0 ns |
| Chrominance to Luminance Gain Ratio | 0 to 160% | ±1.0% | ±0.1% |

### Chrominance Frequency Response

| Measurement | Range | Absolute Mode Accuracy | Relative Mode Accuracy |
|---|---|---|---|
| Reference Amplitude | 0 to 100 IRE | ±1% | ±0.5% |
| Frequency Response | 0 to 100 IRE | ±1% | ±0.5% |

### Chrominance Noise

| Measurement | Range | Absolute Mode Accuracy |
|---|---|---|
| AM Noise | 20 to 80 dB | ±1 dB (20 to 60 dB) |
| PM Noise | 20 to 70 dB | ±1 dB (20 to 60 dB) |

### Chrominance Non–Linearity

| Measurement | Range | Absolute Mode Accuracy | Relative Mode Accuracy |
|---|---|---|---|
| Chrominance Amplitude | 0 to 100% | 1.0% | 0.5% |
| Chrominance Phase | 0 to 360° | 1° | 0.2° |
| Chrominance to Luminance Intermodulation | 50 to 50% | 0.2% | 0.2% |

### Color Bar

| Measurement | Range | Absolute Mode Accuracy | Relative Mode Accuracy |
|---|---|---|---|
| Luminance Level | 0 to 100 IRE (0 to 714.3 mV) | ±0.5 IRE | ±0.2% |
| Chrominance Level (excluding gray and black) | 0 to 100 IRE (0 to 714.3 mV) | ±1.0% of nominal | ±0.2% |
| Chrominance Phase | ±180° of nominal | ±0.5° of nominal | ±0.1° |

### SMPTE Color Bar Nominal Values

| Color | LUM (mV) | Chroma P–P (mV) | Phase (degrees) |
|---|---|---|---|
| Yellow | 494.6 | 444.2 | 167.1 |
| Cyan | 400.4 | 630.1 | 283.4 |
| Green | 345.9 | 588.5 | 240.8 |
| Magenta | 256.7 | 588.5 | 60.8 |
| Red | 202.2 | 630.1 | 103.4 |
| Blue | 108.1 | 444.2 | 347.1 |

### Differential Gain and Phase

| Measurement | Range | Absolute Mode Accuracy | Relative Mode Accuracy |
|---|---|---|---|
| Differential Gain | 0 to 100% | ±0.3% | ±0.03% |
| Differential Phase | 0 to 360° | ±0.3° | ±0.03° |

### Frequency Response and Group Delay

| Measurement | Range | Absolute Mode Accuracy | Relative Mode Accuracy |
|---|---|---|---|
| Frequency Response | ±40 dB | ±1.0 dB | ±0.3 dB |
| Group Delay | ±1.0 µs | ±20 ns | ±5 ns |

### Horizontal Blanking

| Measurement | Range | Absolute Mode Accuracy |
|---|---|---|
| Blanking Start | 0.1 to 4.2 µs | ±50 ns |
| Blanking End | 6.8 to 12.2 µs | ±50 ns |
| Blanking Width | 6.9 to 16.4 µs | ±50 ns |

### Horizontal Timing

| Measurement | Range | Absolute Mode Accuracy |
|---|---|---|
| Burst Level | 10 to 80 IRE | ±0.5% |
| Horizontal Sync Rise and Fall Time | 80 ns to 1 µs | ±10 ns |
| Horizontal Sync Width | 3 to 7 µs | ±10 ns |
| Burst Width | 6 to 13 cycles | ±0.1 cycles (FCC)<br>±0.5 cycles (RS–170A) |
| Sync to Burst Start (RS–170A) | 4 to 10 µs | ±150 ns |
| Sync to Burst End (FCC) | 4 to 10 µs | ±25 ns |
| Front Porch | 0.1 to 3.5 µs | ±10 ns (FCC)<br>±10 ns (RS–170A) |
| Sync to Setup | 8.8 to 13.0 µs | ±10 ns |
| Breezeway (FCC) | 0.1 to 5 µs | ±25 ns |
| Sync Level | 20 to 80 IRE | ±0.5% |

### Incedental Carrier Phase Modulation

| Measurement | Range | Accuracy |
|---|---|---|
| ICPM (requires zero Carrier Pulse and the quadrature output of the demodulator on Channel C) | 0 to 90° | ±1.0° |

### Jitter

| Measurement | Range | Absolute Mode Accuracy |
|---|---|---|
| Jitter (2 Field) | ±20 µs | ±10 ns |
| Jitter Long Time | ±20 µs | ±10 ns |

### K–Factor

| Measurement | Range | Absolute Mode Accuracy |
|---|---|---|
| 2T Pulse K–Factor | 0 to 10% Kf | ±0.3% |
| $K_{PB}$ | –10 to +5% $K_{PB}$ | ±0.3% |
| Pulse to Bar Ratio | 10 to 125% | ±0.7% |
| Pulse Half Amplitude Duration (HAD) | 100 to 500 ns | ±5 ns |

### Line Frequency

| Measurement | Range | Accuracy |
|---|---|---|
| Line Frequency | ±3% | ±0.1% |
| Field Frequency | ±3% | ±0.1% |

### Luminance Non–Linearity

| Measurement | Range | Absolute Mode Accuracy | Relative Mode Accuracy |
|---|---|---|---|
| Luminance Non–Linearity | 0 to 100% | ±0.4% | ±0.2% |

### Multiburst

| Measurement | Range | Absolute Mode Accuracy | Relative Mode Accuracy |
|---|---|---|---|
| Reference Flag or Packet Amplitude | 30 to 130 IRE | ±1% | NA |
| Other Packets[1] | –40 to +6 dB | ±0.1 dB | ±0.03 dB |

[1] Total Harmonic Distortion on packets must be ≤46 dB.

### Noise Spectrum

| Measurement | Range | Absolute Mode Accuracy |
|---|---|---|
| Unweighted Signal–to–Noise Ratio (5 MHz Low Pass) | –20 to –80 dB | ±0.4 dB (–20 to –60 dB) ±1.0 dB (–60 to –70 dB) |
| Weighted Signal–to–Noise Ratio (5 MHz Low Pass and Unified Weighting) | –20 to –80 dB | ±1.0 dB (–20 to –60 dB) ±2.0 dB (–60 to –70 dB) |

### SCH Phase

| Measurement | Range | Absolute Mode Accuracy |
|---|---|---|
| SCH Phase | ±90° | ±5° |
| Sync Timing | ±1 µs | ±10 ns |
| Burst Timing | ±180° | ±5° |

### Vertical Blanking

| Measurement | Range | Absolute Mode Accuracy |
|---|---|---|
| Equalizing Pulse Width | 80 ns to 1 µs | ±10 ns |
| Serration Pulse Width | 80 ns to 1 µs | ±10 ns |

## Auto Mode Measurements

### RS–170A Horizontal Blanking Interval Timing Measurements

| Measurement | Range | Accuracy | Test Signal |
|---|---|---|---|
| Color Burst Width | 6 to 13 cycles | ±0.1 cycles | Horizontal Blanking |
| Front Porch Duration | 0.5 to 2 µs | ±20 ns | Horizontal Blanking |
| Horizontal Blanking Width | 6 to 30 µs | ±50 ns | Horizontal Blanking |
| Horizontal Sync Rise and Fall Time | 80 to 120 ns<br>120 to 300 ns<br>300 ns to 1.0 µs | –10 to +30 ns<br>±20 ns<br>±30 ns | Horizontal Blanking |
| Horizontal Sync Width | 1 to 8 µs | ±10 ns | Horizontal Blanking |
| SCH Phase | ±90° | ±5° | Horizontal Blanking |
| Sync to Setup | 5 to 18 µs | ±20 ns | Horizontal Blanking |
| Sync to Start of Burst | 4 to 8 µs | ±140 ns (0.5 cycles)<br>±20 ns | Horizontal Blanking |

### RS–170A Vertical Blanking Interval

| Measurement | Range | Accuracy | Test Signal |
|---|---|---|---|
| Equalizing Pulse Width | 1 to 20 µs | ±10 ns | Vertical Blanking |
| Serration Width | 1 to 20 µs | ±10 ns | Vertical Blanking |
| Vertical Blanking Width | 19 to 29 lines | –0.1 to +0.2 lines | Vertical Blanking |

### FCC Horizontal Blanking Interval Timing Measurements

| Measurement | Range | Accuracy | Test Signal |
|---|---|---|---|
| Breezeway Width | 0.2 to 3.5 µs | ±25 ns | Horizontal Blanking |
| Color Burst Width | 6 to 13 cycles | ±0.1 cycles | Horizontal Blanking |
| Front Porch Duration | 0.5 to 2 µs | ±10 ns | Horizontal Blanking |
| Horizontal Blanking Width | 6 to 30 µs | ±10 ns | Horizontal Blanking |
| Horizontal Sync Rise and Fall Time | 80 to 120 ns<br>120 to 300 ns<br>300 ns to 1.0 µs | –10 to +30 ns<br>±20 ns<br>±30 ns | Horizontal Blanking |
| Horizontal Sync Width | 1 to 8 µs | ±10 ns | Horizontal Blanking |
| Sync to Setup | 5 to 18 µs | ±20 ns | Horizontal Blanking |
| Sync to End of Burst | 6 to 15 µs | ±20 ns | Horizontal Blanking |

## FCC Vertical Blanking Interval Timing Measurements

| Measurement | Range | Accuracy | Test Signal |
|---|---|---|---|
| Equalizing Pulse Width | 25 to 100% of nominal horizontal sync pulse width | ±0.3% | Vertical Blanking |
| Serration Width | 1 to 20 µs | ±10 ns | Vertical Blanking |
| Vertical Blanking Width | 19 to 29 lines | –0.1 lines to +0.2 lines | Vertical Blanking |

## Amplitude and Phase Measurements

| Measurement | Range | Accuracy | Test Signal |
|---|---|---|---|
| Average Picture Level (APL) | 0 to 200% | ±3.0% | Full Field |
| Bar Top | 0 to 90% of Maximum Carrier | ±0.1% | FCC/NTC–7 Composite |
| Bar Amplitude | 0 to 200 IRE | ±0.3 IRE | FCC/NTC–7 Composite |
| Chrominance to Luminance Delay (Relative Chroma Time) | ±300 ns | ±5 ns | FCC/NTC–7 Composite |
| Chrominance to Luminance Gain (Relative Chroma Level) | 0 to 160% | ±1% | FCC/NTC–7 Composite |
| Differential Gain | 0 to 100% | ±0.3% | FCC/NTC–7 Composite |
| Differential Phase | 0 to 360° | ±0.3° | FCC/NTC–7 Composite |
| Luminance Non–linear Distortion | 0 to 50% | ±0.4% | FCC/NTC–7 Composite |
| Relative Burst Gain | ±100% | ±0.3% | FCC/NTC–7 Composite |
| Relative Burst Phase | ±180° | ±0.3° | FCC/NTC–7 Composite |
| Burst Amplitude (% of sync) | 25 to 200% of sync | ±1.0% | Horizontal Blanking |
| Burst Amplitude (% of Bar) | 10 to 80% of Bar (10 to 80 IRE when Bar is not used) | ±0.4% (±0.4 IRE) | Horizontal Blanking |
| Sync Amplitude (% of Bar) | 20 to 80% of Bar (20 to 80 IRE when Bar is not used) | ±0.3% (±0.3 IRE) | Horizontal Blanking |
| Blanking Level | 0 to 90% of Maximum Carrier | ±0.2% | Horizontal Blanking |
| Sync Variation | 0 to 50% of Maximum Carrier (0 to 50% of Bar when Zero Carrier is not used and 0 to 50 IRE when Zero Carrier and Bar are not used) | ±0.3% for Zero Carrier (±0.3% for Bar and ±0.3 IRE for no Zero Carrier and no Bar) | Horizontal Blanking |
| Blanking Variation | 0 to 50% of Maximum Carrier (0 to 50% of Bar when Zero Carrier is not used and 0 to 50 IRE when Zero Carrier and Bar are not used) | ±0.3% for Zero Carrier (±0.3% for Bar and ±0.3 IRE for no Zero Carrier and no Bar) | Horizontal Blanking |

### Frequency Response Measurements

| Measurement | Range | Accuracy | Test Signal |
|---|---|---|---|
| Multiburst Flag Amplitude | 0 to 90% of Maximum Carrier (20 to 130% of Bar when Zero Carrier is not used and 20 to 130 IRE when Zero Carrier and Bar are not used) | ±0.5% for Zero Carrier (±0.5% for Bar and ±0.5 IRE for no Zero Carrier and no Bar) | FCC Multiburst or NTC–7 Combination |
| Multiburst Packet Amplitudes | 0 to 100% of Flag | ±1% of Flag | FCC Multiburst or NTC–7 Combination |

### Incidental Carrier Phase Modulation

| Measurement | Range | Accuracy | Test Signal |
|---|---|---|---|
| ICPM (requires Zero Carrier Pulse and the quadrature output of the demodulator on channel C) | 0 to 30° | ±1.0° | FCC or NTC–7 Composite |

### Color Bar Measurements

| Measurement | Range | Accuracy | Test Signal |
|---|---|---|---|
| Color Bar Amplitude Errors | ±100% of nominal | ±1.0% | FCC Color Bars |
| Color Bar Phase Errors | ±180° from nominal | ±0.5° | FCC Color Bars |
| Color Bar Chrominance to Luminance Gain Ratio | 0 to 200% of nominal | ±2% | FCC Color Bars |

### Out–of–Service Measurements

| Measurement | Range | Accuracy | Test Signal |
|---|---|---|---|
| Field Time Distortion | 0 to 40% | ±0.5% | Field Square Wave |

## Waveform Distortion Measurements

| Measurement | Range | Accuracy | Test Signal |
|---|---|---|---|
| Line Time Distortion | 0 to 40% of Bar | ±0.2% | FCC or NTC–7 Composite |
| Pulse to Bar Ratio | 10 to 125% | ±0.7% | FCC or NTC–7 Composite |
| Short Time Waveform Distortion (IEEE 511) | 0 to 25% SD | ±0.5% SD | NTC–7 Composite |
| Chrominance Non–linear Gain Distortion | 5 to 35 IRE (20 IRE chroma) 45 to 160 IRE (80 IRE chroma) | ±0.4 IRE | NTC–7 Combination |
| Chrominance Non–linear Phase Distortion | 0 to 360° | ±1.0° | NTC–7 Combination |
| Chrominance to Luminance Intermodulation | ±50 IRE | ±0.2 IRE | NTC–7 Combination |
| 2T K–Factor | 0 to 10% Kf | ±0.3% Kf | FCC or NTC–7 Composite |

## VIRS Measurements

| Measurement | Range | Accuracy | Test Signal |
|---|---|---|---|
| VIRS Setup (Reference Black) | –20 to +130% of Bar (–20 to +130 IRE when Bar is not used) | ±0.2% (±0.5 IRE when Bar is not used) | VIRS |
| VIRS Chrominance Reference Amplitude | 0 to 200% of burst amplitude (0 to 80% of Bar when burst is not used and 0 to 80 IRE when burst and bar are not used) | ±1% (±0.1% when burst is not used and ±1 IRE when burst and bar are not used) | VIRS |
| VIRS Chrominance Phase Relative to Burst | ±180° | ±0.5° | VIRS |
| VIRS Luminance Reference | 30 to 100% of Bar (30 to 100 IRE when bar is not used) | ±0.2% (±0.2 IRE) | VIRS |

## Signal–to–Noise Ratio Measurements

| Measurement | Range | Accuracy | Test Signal |
|---|---|---|---|
| Unified Unweighted SNR | 26 to 60 dB<br>61 to 70 dB | ±1.0 dB<br>±2.0 dB | Quiet Line |
| Unified Luminance Weighted SNR | 26 to 60 dB<br>61 to 70 dB | ±1.0 dB<br>±2.0 dB | Quiet Line |
| NTC 7 Unweighted SNR | 26 to 60 dB<br>61 to 70 dB | ±1.0 dB<br>±2.0 dB | Quiet Line |
| NTC 7 Luminance Weighted SNR | 26 to 60 dB<br>61 to 70 dB | ±1.0 dB<br>±2.0 dB | Quiet Line |
| Periodic SNR | 26 to 60 dB<br>61 to 70 dB | ±1.0 dB<br>±2.0 dB | Quiet Line |

# REPLACEABLE ELECTRICAL PARTS LIST [B1]

## PARTS ORDERING INFORMATION

Replacement parts are available from or through your local Tektronix, Inc., field office or representative.

It is important, when ordering parts, to include the following information in your order. Part number, instrument type and number, serial number, and modification number if applicable.

If a part you have ordered has been replaced with a new or improved part, your local Tektronix, Inc., field office or representative will contact you concerning any change in part number.

Change information, if any, is located at the rear of this manual.

### LIST OF ASSEMBLIES

A list of assemblies can be found at the beginning of the Electrical Parts List. The assemblies are listed in numerical order. When the complete component number of a part is known, this list will identify the assembly in which the part is located.

### CROSS INDEX-MFR. CODE NUMBER TO MANUFACTURER

The Mfr. Code Number to Manufacturer index for the Electrical Parts List is located immediately after this page. The Cross Index provides codes, names, and addresses of manufacturers of components listed in the Electrical Parts List.

### ABBREVIATIONS

Abbreviations conform to American National Standard Y1.1.

### COMPONENT NUMBER
#### (Column 1 of the Electrical Parts List)

A numbering method has been used to identify assemblies, subassemblies, and parts. Examples of this numbering method and typical expansions are illustrated by the following:

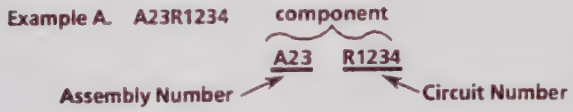


Read: Resistor 1234 of Assembly 23.

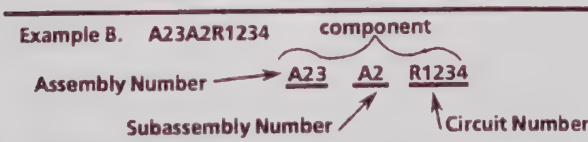


Read: Resistor 1234 of Subassembly 2 of Assembly 23.

Only the circuit number will appear on the diagrams and circuit board illustrations. Each diagram and circuit board illustration is clearly marked with the assembly number. Assembly numbers are also marked on the mechanical exploded views located in the Mechanical Parts List. The component number is obtained by adding the assembly number prefix to the circuit number.

The Electrical Parts List is divided and arranged by assemblies in numerical sequence (e.g., assembly A1 with its subassemblies and parts, precedes assembly A2 with its subassemblies and parts).

Mechanical subparts to the circuit boards are listed in the Electrical Parts List. These mechanical subparts are listed with their associated electrical parts. For example, fuse holder follows fuse.

Chassis-mounted parts and cable assemblies have no assembly number prefix and are located at the end of the Electrical Parts List.

### TEKTRONIX PART NO.
#### (Column 2 of the Electrical Parts List)

Indicates part number to be used when ordering replacement parts from Tektronix.

### SERIAL/ASSEMBLY NO.
#### (Columns 3 and 4 of the Electrical Parts List)

Column 3 indicates the serial or assembly number at which the part was first used. Column 4 indicates the serial or assembly number at which the part was removed. No serial or assembly number entered indicates part is good for all serial numbers.

### NAME AND DESCRIPTION
#### (Column 5 of the Electrical Parts List)

In the Parts List, an Item Name is separated from the description by a colon (:). Because of space limitations, an Item Name may sometimes appear as incomplete. For further Item Name identification, the U.S. Federal Cataloging Handbook H6-1 can be utilized where possible. The Mechanical subparts are shown as *ATTACHED PARTS* / *END ATTACHED PARTS* or *MOUNTING PARTS* / *END MOUNTING PARTS* in column 5.

### MFR. CODE
#### (Column 6 of the Electrical Parts List)

Indicates the code number of the actual manufacturer of the part. (Code to name and address cross-reference can be found immediately after this page.)

### MFR. PART NUMBER
#### (Column 7 of the Electrical Parts List)

Indicates actual manufacturer's part number.

## CROSS INDEX - MFR. CODE NUMBER TO MANUFACTURER

| Mfr. Code | Manufacturer | Address | City, State, Zip Code |
|---|---|---|---|
| 000BK | STAUFFER SUPPLY | 105 SE TAYLOR | PORTLAND, OR 97214 |
| 00213 | NYTRONICS COMPONENTS GROUP INC<br>SUBSIDIARY OF NYTRONICS INC | ORANGE ST | DARLINGTON SC 29532 |
| 00261 | GENERAL ELECTRIC CO<br>FOOD SERVICE EQUIPMENT BUSINESS DEPT | 14TH AND ARNOLD STS | CHICAGO HEIGHTS IL 60411 |
| 00779 | AMP INC | 2800 FULLING MILL<br>PO BOX 3608 | HARRISBURG PA 17105 |
| 00853 | SANGAMO WESTON INC<br>COMPONENTS DIV | SANGAMO RD<br>PO BOX 128 | PICKENS SC 29671-9716 |
| 01121 | ALLEN-BRADLEY CO | 1201 S 2ND ST | MILWAUKEE WI 53204-2410 |
| 01295 | TEXAS INSTRUMENTS INC<br>SEMICONDUCTOR GROUP | 13500 N CENTRAL EXPY<br>PO BOX 655012 | DALLAS TX 75265 |
| 01536 | TEXTRON INC<br>CAMCAR DIV<br>SEMS PRODUCTS UNIT | 1818 CHRISTINA ST | ROCKFORD IL 61108 |
| 01537 | MOTOROLA<br>COMMUNICATIONS AND ELECTRONICS INC | 2553 N EDGINGTON ST | FRANKLIN PARK IL 60131-3401 |
| 02111 | HAMILTON STANDARD CONTROLS INC<br>SPECTROL DIV | 17070 E GALE AVE<br>P O BOX 1220 | CITY OF INDUSTRY CA 91749 |
| 02113 | COILCRAFT INC | 1102 SILVER LAKE RD | CARY IL 60013-1658 |
| 02735 | RCA CORP<br>SOLID STATE DIVISION | | |
| 03508 | GENERAL ELECTRIC CO<br>SEMI-CONDUCTOR PRODUCTS DEPT | W GENESEE ST | AUBURN NY 13021 |
| 04072 | BELL INDUSTRIES<br>JW MILLER DIVISION | | COMPTON CA 94539 |
| 04222 | AVX CERAMICS<br>DIV OF AVX CORP | 19TH AVE SOUTH<br>P O BOX 867 | MYRTLE BEACH SC 29577 |
| 04426 | ITW SWITCHES<br>DIV OF ILLINOIS TOOL WORKS INC | 6615 W IRVING PARK RD | CHICAGO IL 60634-2410 |
| 04713 | MOTOROLA INC<br>SEMICONDUCTOR PRODUCTS SECTOR | 5005 E MCDOWELL RD | PHOENIX AZ 85008-4229 |
| 05397 | UNION CARBIDE CORP<br>MATERIALS SYSTEMS DIV | 11901 MADISON AVE | CLEVELAND OH 44101 |
| 05464 | INDUSTRIAL ELECTRONIC ENGINEERS INC | 7440 LEMONA AVE | VAN NUYS CA 91405-1136 |
| 05828 | GENERAL INSTRUMENT CORP<br>GOVERNMENT SYSTEMS DIV | 600 W JOHN ST | HICKSVILLE NY 11802 |
| 06090 | RAYCHEM CORP | 300 CONSTITUTION DRIVE | MENLO PARK CA 94025-1111 |
| 06383 | PANDUIT CORP | 17301 RIDGELAND | TINLEY PARK IL 07094-2917 |
| 06665 | PRECISION MONOLITHICS INC<br>SUB OF BOURNS INC | | |
| 06950 | SCREWCORP VSI AEROSPACE PRODUCTS DIV<br>SUB OF FAIRCHILD INDUSTRIES INC | 13001 E TEMPLE AVE<br>PO BOX 730 | CITY OF INDUSTRY CA 91746-1417 |
| 07088 | KELVIN ELECTRIC CO | 5907 NOBLE AVE | VAN NUYS CA 91411 |
| 07263 | FAIRCHILD SEMICONDUCTOR CORP | | |
| 07716 | TRW INC<br>TRW IRC FIXED RESISTORS/BURLINGTON | 2850 MT PLEASANT AVE | BURLINGTON IA 52601 |
| 09353 | C AND K COMPONENTS INC | 15 RIVERDALE AVE | NEWTON MA 02158-1057 |
| 09772 | WEST COAST LOCKWASHER CO INC | 16730 E JOHNSON DRIVE<br>P O BOX 3588 | CITY OF INDUSTRY CA 91744 |
| 09922 | BURNDY CORP | RICHARDS AVE | NORWALK CT 06852 |
| 11236 | CTS CORP<br>BERNE DIV<br>THICK FILM PRODUCTS GROUP | 406 PARR ROAD | BERNE IN 46711-9506 |
| 11532 | TELEDYNE RELAYS<br>TELEDYNE INDUSTRIES INC<br>SUB OF TELEDYNE INC | 12525 DAPHNE AVE | HAWTHORNE CA 90250-3308 |
| 13103 | THERMALLOY CO INC | 2021 W VALLEY VIEW LN<br>PO BOX 810839 | DALLAS TX 75381 |
| 14193 | CAL-R INC | 1601 OLYMPIC BLVD<br>PO BOX 1397 | SANTA MONICA CA 90406 |
| 14301 | ANDERSON ELECTRONICS INC | 310 PENN ST<br>PO BOX 89 | HOLLIDAYSBURG PA 16648-2009 |
| 14433 | ITT SEMICONDUCTORS DIV | | WEST PALM BEACH FL |
| 14752 | ELECTRO CUBE INC | 1710 S DEL MAR AVE | SAN GABRIEL CA 91776-3825 |
| 15513 | DATA DISPLAY PRODUCTS | 301 CORAL CIR | EL SEGUNDO CA 90245-4620 |

## CROSS INDEX - MFR. CODE NUMBER TO MANUFACTURER

| Mfr. Code | Manufacturer | Address | City, State, Zip Code |
|---|---|---|---|
| 18324 | SIGNETICS CORP<br>MILITARY PRODUCTS DIV | 4130 S MARKET COURT | SACRAMENTO CA 95834-1222 |
| 18565 | CHOMERICS INC | 77 DRAGON COURT | WOBURN MA 01801-1039 |
| 18736 | VOLTRONICS CORP | WEST STREET<br>PO BOX 476 | EAST HANOVER NJ 07936-2822 |
| 19701 | PHILIPS COMPONENTS DISCRETE PRODUCTS DIV RESISTIVE PRODUCTS FACILITY<br>AIRPORT ROAD | PO BOX 760 | MINERAL WELLS TX 76067-0760 |
| 21847 | FEI MICROWAVE INC | 825 STEWART DR | SUNNYVALE CA 94086-4514 |
| 22519 | DATA DELAY DEVICES INC | 3 MT PROSPECT AVE | CLIFTON NJ 07013 |
| 22526 | DU PONT E I DE NEMOURS AND CO INC<br>DU PONT ELECTRONICS DEPT | 515 FISHING CREEK RD | NEW CUMBERLAND PA 17070-3007 |
| 22599 | AMERACE CORP<br>ESNA DIV | 15201 BURBANK BLVD<br>SUITE C | VAN NUYS CA 91411-3532 |
| 24165 | SPRAGUE ELECTRIC CO | 267 LOWELL ROAD | HUDSON NH 03051 |
| 24355 | ANALOG DEVICES INC | RT 1 INDUSTRIAL PK<br>PO BOX 9106 | NORWOOD MA 02062 |
| 24931 | SPECIALTY CONNECTOR CO INC | 2100 EARLYWOOD DR<br>PO BOX 547 | FRANKLIN IN 46131 |
| 25088 | SIEMENS CORP | 186 WOOD AVE S | ISELIN NJ 08830-2704 |
| 26364 | COMPONENTS CORP | 6 KINSEY PLACE | DENVILLE NJ 07834-2611 |
| 27014 | NATIONAL SEMICONDUCTOR CORP | 2900 SEMICONDUCTOR DR | SANTA CLARA CA 95051-0606 |
| 27264 | MOLEX INC | 2222 WELLINGTON COURT | LISLE IL 60532-1613 |
| 28733 | CERAMIC MAGNETICS INC | 87 FAIRFIELD RD | FAIRFIELD NJ 07006-4732 |
| 29587 | BUNKER RAMO CORP AMPHENOL INDUSTRIAL DIV | 1830 S 54TH AVE | CHICAGO IL 60650 |
| 2M627 | ROHM CORPORATION | PO BOX 19515 | IRVINE CA 92713 |
| 30817 | INSTRUMENT SPECIALTIES CO INC | EXIT 53 RT 80<br>BOX A | DELAWARE WATER GAP PA 18327 |
| 32293 | INTERSIL INC | | |
| 32436 | SYSCON INTERNATIONAL INC | 1701 S MAIN ST | SOUTH BEND IN 46613-2211 |
| 32997 | BOURNS INC<br>TRIMPOT DIV | 1200 COLUMBIA AVE | RIVERSIDE CA 92507-2114 |
| 34371 | HARRIS CORP<br>HARRIS SEMICONDUCTOR PRODUCTS GROUP | 200 PALM BAY BLVD<br>PO BOX 883 | MELBOURNE FL 32919 |
| 4T165 | NEC ELECTRONICS USA INC<br>ELECTRON DIV | 401 ELLIS ST<br>PO BOX 7241 | MOUNTAIN VIEW CA 94039 |
| 51406 | MURATA ERIE NORTH AMERICA INC<br>HEADQUARTERS AND GEORGIA OPERATIONS | 2200 LAKE PARK DR | SMYRNA GA 30080 |
| 52763 | STETCO INC | 3344 SCHIERHORN | FRANKLIN PARK IL 60131 |
| 54294 | SHALLCROSS INC<br>SUB OF HIRSCH AND ASSOCIATES | US 70 EAST | SMITHFIELD NC 27577 |
| 54473 | MATSUSHITA ELECTRIC CORP OF AMERICA | ONE PANASONIC WAY<br>PO BOX 1501 | SECAUCUS NJ 07094-2917 |
| 54583 | TDK ELECTRONICS CORP | 12 HARBOR PARK DR | PORT WASHINGTON NY 11550 |
| 54937 | DEYOUNG MANUFACTURING INC | 12920 NE 125TH WAY | KIRKLAND WA 98034-7716 |
| 55112 | WESTLAKE CAPACITORS INC | 5334 STERLING CENTER DRIVE | WESTLAKE VILLAGE CA 91361 |
| 55285 | BERGQUIST CO INC THE | 5300 EDINA INDUSTRIAL BLVD | MINNEAPOLIS MN 55435-3707 |
| 55680 | NICHICON /AMERICA/ CORP | 927 E STATE PKY | SCHAUMBURG IL 60195-4526 |
| 57027 | INTERNATIONAL RESISTIVE PRODUCTS INC | 4222 S STAPLES | CORPUS CHRISTI TX 78411-2702 |
| 57668 | ROHM CORP | 8 WHATNEY<br>PO BOX 19515 | IRVINE CA 92713 |
| 57924 | BOURNS INC<br>NETWORKS DIV | 1400 NORTH 1000 WEST | LOGAN UT 84321 |
| 58050 | TEKA PRODUCTS INC | 45 SALEM ST | PROVIDENCE RI 02907 |
| 58224 | XENELL CORP | 11 DUNBARTON RD<br>PO BOX 4401 | CHERRY HILL NJ 08003-2107 |
| 58361 | QUALITY TECHNOLOGIES CORP | 3400 HILLVIEW AVE | PALO ALTO CA 94304-1319 |
| 59492 | K AND L QUARTZTEK<br>DIV OF K AND L MICROWAVE INC | | |
| 59660 | TUSONIX INC | 7741 N BUSINESS PARK DR<br>PO BOX 37144 | TUCSON AZ 85740-7144 |
| 61429 | FOX ELECTRONICS<br>FOX ENTERPRISES INC | PO BOX 1078 | CAPE CORAL FL 33910-1078 |
| 61772 | INTEGRATED DEVICE TECHNOLOGY | 3236 SCOTT BLVD | SANTA CLARA CA 95051 |
| 61857 | SAN-O INDUSTRIAL CORP | 85 ORVILLE DR<br>PO BOX 511 | BOHEMIA LONG ISLAND NY 11716-2501 |

## CROSS INDEX - MFR. CODE NUMBER TO MANUFACTURER

| Mfr. Code | Manufacturer | Address | City, State, Zip Code |
|---|---|---|---|
| 63058 | MCKENZIE TECHNOLOGY | 44370 OLD WARMS SPRINGS BLVD | FREMONT CA 94538 |
| 71400 | BUSSMANN<br>DIV OF COOPER INDUSTRIES INC | 114 OLD STATE RD<br>PO BOX 14460 | ST LOUIS MO 63178 |
| 71468 | ITT CANNON<br>DIV OF ITT CORP | 666 E DYER RD | SANTA ANA CA 92702 |
| 72982 | ERIE SPECIALTY PRODUCTS INC | 645 W 11TH ST | ERIE PA 16512 |
| 73743 | FISCHER SPECIAL MFG CO | 111 INDUSTRIAL RD | COLD SPRING KY 41076-9749 |
| 75042 | IRC ELECTRONIC COMPONENTS<br>PHILADELPHIA DIV<br>TRW FIXED RESISTORS | 401 N BROAD ST | PHILADELPHIA PA 19108-1001 |
| 75498 | MULTICOMP INC | 3005 SW 154TH TERRACE #3 | BEAVERTON OR 97006 |
| 75915 | LITTELFUSE INC<br>SUB TRACOR INC | 800 E NORTHWEST HWY | DES PLAINES IL 60016-3049 |
| 77900 | ILLINOIS TOOL WORKS<br>SHAKEPROOF DIV | ST CHARLES RD | ELGIN IL 60120 |
| 78189 | ILLINOIS TOOL WORKS INC<br>SHAKEPROOF DIV | ST CHARLES ROAD | ELGIN IL 60120 |
| 80009 | TEKTRONIX INC | 14150 SW KARL BRAUN DR<br>PO BOX 500 | BEAVERTON OR 97077-0001 |
| 81073 | GRAYHILL INC | 561 HILLGROVE AVE<br>PO BOX 10373 | LA GRANGE IL 60525-5914 |
| 81350 | JOINT ARMY-NAVY SPECIFICATIONS,<br>PROMULGATED BY MILITARY DEPARTMENTS<br>UNDER AUTHORITY OF DEFENSE STANDARD-<br>IZATION MANUAL 4120 3-M | | |
| 83385 | MICRODOT MFG INC<br>GREER-CENTRAL DIV | 3221 W BIG BEAVER RD | TROY MI 48098 |
| 86928 | SEASTROM MFG CO INC | 701 SONORA AVE | GLENDALE CA 91201-2431 |
| 91506 | AUGAT INC | 33 PERRY AVE<br>P O BOX 779 | ATTLEBORO MA 02703-2417 |
| 91637 | DALE ELECTRONICS INC | 2064 12TH AVE<br>PO BOX 609 | COLUMBUS NE 68601-3632 |
| 93907 | TEXTRON INC<br>CAMCAR DIV | 600 18TH AVE | ROCKFORD IL 61108-5181 |
| 95275 | VITRAMON INC | BOX 544 | BRIDGEPORT CT 06601-0544 |
| 96214 | TEXAS INSTRUMENTS INC<br>DEFENSE SYSTEMS & ELECTRONICS GROUP | 8505 FOREST LN<br>PO BOX 660246 M/S 3137 | DALLAS TX 75266-0246 |
| 98159 | RUBBER TECK INC | 19115 HAMILTON AVE<br>PO BOX 389 | GARDENA CA 90247 |
| 98978 | INTERNATIONAL ELECTRONIC RESEARCH CORP | 135 W MAGNOLIA BLVD<br>PO BOX 7704 | BURBANK CA 91502 |
| D5243 | ROEDERSTEIN E SPEZIALFABRIK FUER KONDENSATOREN GMBN | LUDMILLASTRASSE 23-25 | 8300 LANDSHUT GERMANY |
| S3629 | SCHURTER AG H<br>C/O PANEL COMPONENTS CORP | 2015 SECOND STREET | BERKELEY CA 94170 |
| TK0303 | FAB TEK INC | 17 SUGAR HOLLOW RD | DANBURY CT 06810 |
| TK0435 | LEWIS SCREW CO | 4300 S RACINE AVE | CHICAGO IL 60609-3320 |
| TK0510 | PANASONIC COMPANY<br>DIV OF MATSUSHITA ELECTRIC CORP | ONE PANASONIC WAY | SECAUCUS NJ 07094 |
| TK0858 | STAUFFER SUPPLY CO (DIST) | | |
| TK0861 | H SCHURTER AG DIST PANEL COMPONENTS | 2015 SECOND STREET | BERKELEY CA 94170 |
| TK0946 | SAN-O INDUSTRIAL CORP | 170 WILBUR PL | BAHEMIA LONG ISLAND NY 11716 |
| TK1134 | TUSONIX INC | 2155 N FORBES BLVD | TUCSON AZ 85705 |
| TK1320 | PLAINVIEW ELECTRONICS CORP | 28 CAIN,RD | PLAINVIEW NY 11803-4402 |
| TK1345 | ZMAN & ASSOCIATES | | |
| TK1441 | GFS MANUFACTURING INC | 6 PROGRESS DR<br>PO BOX 1409 | DOVER NH 03820 |
| TK1450 | TOKYO COSMOS ELECTRIC CO LTD | 2-268 SOBUDAI ZAWA | KANAGAWA 228 JAPAN |
| TK1468 | LINEAR TECHNOLOGY CORP | 1630 MCCARTHY BLVD | MILPITAS CA 95037 |
| TK1483 | TEKA PRODUCTS | | |
| TK1573 | WILHELM WESTERMAN | PO BOX 2345<br>AUGUSTA-ANLAGE 56 | 6800 MANNHEIM 1 WEST GERMANY |
| TK1601 | PULSE ENGINEERING INC | 2801 MOORPARK AVE<br>SUITE 7 | SAN JOSE CA 95128 |
| TK2042 | ZMAN & ASSOCIATES | 7633 S 180TH | KENT WA 98032 |
| TK2058 | TDK CORPORATION OF AMERICA | 2055 GATEWAY PLACE<br>SUITE 200 | SAN JOSE CA 95110 |

## CROSS INDEX - MFR. CODE NUMBER TO MANUFACTURER

| Mfr. Code | Manufacturer | Address | City, State, Zip Code |
|---|---|---|---|
| TK2204 | ELMEC TECHNOLOGY OF AMERICA INC | 1225 RIDGECREST ST | MONTEREY PARK CA 91754 |
| TK2361 | MULTIPOWER INC | 3005 SW 154TH TERRACE #1 | BEAVERTON OR 97006 |

| Component No. | Tektronix Part No. | Serial/Assembly No. Effective | Dscont | Name & Description | Mfr. Code | Mfr. Part No. |
|---|---|---|---|---|---|---|
| A1 | 671-0535-05 | B022000 | B022447 | CIRCUIT BD ASSY:ANALOG INPUT | 80009 | 671-0535-05 |
| A1 | 671-0535-06 | B022448 | B022693 | CIRCUIT BD ASSY:ANALOG INPUT | 80009 | 671-0535-06 |
| A1 | 671-0535-07 | B022694 | B023422 | CIRCUIT BD ASSY:ANALOG INPUT | 80009 | 671-0535-07 |
| A1 | 671-0535-09 | B023423 | | CIRCUIT BD ASSY:ANALOG INPUT | 80009 | 671-0535-09 |
| A2 | 672-1294-01 | B022000 | B023422 | CIRCUIT BD ASSY:GEN LOCK | 80009 | 672-1294-01 |
| A2 | 672-1294-02 | B023423 | B030690 | CIRCUIT BD ASSY:GEN LOCK | 80009 | 672-1294-02 |
| A2 | 672-1294-03 | B030691 | | CIRCUIT BD ASSY:GEN LOCK | 80009 | 672-1294-03 |
| A2A1 | 671-0105-01 | 672-1294-01 | 672-1294-01 | CIRCUIT BD ASSY:GEN LOCK | 80009 | 671-0105-01 |
| A2A1 | 671-0105-02 | 672-1294-02 | 672-1294-02 | CIRCUIT BD ASSY:GEN LOCK | 80009 | 671-0105-02 |
| A2A1 | 671-0105-03 | 672-1294-03 | | CIRCUIT BD ASSY:GEN LOCK | 80009 | 671-0105-03 |
| A2A1A1 | 671-0562-00 | | | CIRCUIT BD ASSY:GENLOCK VCO,PAL | 80009 | 671-0562-00 |
| A2A1A2 | 671-0563-00 | | | CIRCUIT BD ASSY:GENLOCK VCO,NTSC | 80009 | 671-0563-00 |
| A3 | 672-1296-04 | B022000 | B022013 | CIRCUIT BD ASSY:ADC | 80009 | 672-1296-04 |
| A3 | 672-1296-05 | B022014 | B023422 | CKT BD SUBASSY: | 80009 | 672-1296-05 |
| A3 | 672-1296-08 | B023423 | | CIRCUIT BD ASSY: | 80009 | 672-1296-08 |
| A3A1 | 671-0100-03 | 672-1296-04 | 672-1296-04 | CIRCUIT BD ASSY:ADC | 80009 | 671-0100-03 |
| A3A1 | 671-0100-04 | 672-1296-05 | 672-1296-05 | CIRCUIT BD ASSY:ADC | 80009 | 671-0100-04 |
| A3A1 | 671-0100-05 | 672-1296-08 | | CIRCUIT BD ASSY:ADC | 80009 | 671-0100-05 |
| A3A1A1 | 671-0110-01 | | | CIRCUIT BD ASSY:VIDEO DELAY LINE | 80009 | 671-0110-01 |
| A3A1A2 | 671-0101-02 | | | CIRCUIT BD ASSY:REFERENCE GEN | 80009 | 671-0101-02 |
| A3A1A3 | 671-0122-01 | | | CIRCUIT BD ASSY:REFERENCE GEN | 80009 | 671-0122-01 |
| A3A1A4 | 671-0123-01 | | | CIRCUIT BD ASSY:REFERENCE GEN | 80009 | 671-0123-01 |
| A3A1A5 | 671-1510-00 | | | CIRCUIT BD ASSY:PAL,ADC FILTER | 80009 | 671-1510-00 |
| A4 | 672-1295-03 | B022000 | B022030 | CIRCUIT BD ASSY:FILTER SW | 80009 | 672-1295-03 |
| A4 | 672-1295-04 | B022031 | B022761 | CIRCUIT BD ASSY:FILTER SW | 80009 | 672-1295-04 |
| A4 | 672-1344-00 | B022762 | B023422 | CIRCUIT BD ASSY: | 80009 | 672-1344-00 |
| A4 | 672-1344-01 | B023423 | | CIRCUIT BD ASSY: | 80009 | 672-1344-01 |
| A4A1 | 671-0695-01 | 672-1295-03 | 672-1344-00 | CIRCUIT BD ASSY:FILTER | 80009 | 671-0695-01 |
| A4A1 | 671-0695-02 | 672-1344-01 | | CIRCUIT BD ASSY:FILTER | 80009 | 671-0695-02 |
| A4A1A1 | 671-0714-01 | 671-0695-01 | 671-0695-01 | CIRCUIT BD ASSY:HIGHPASS FILTER | 80009 | 671-0714-01 |
| A4A1A1 | 671-0718-00 | 671-0695-02 | | CIRCUIT BD ASSY:CHROMA BANDPASS FILTER | 80009 | 671-0718-00 |
| A4A1A2 | 671-0748-01 | | | CIRCUIT BD ASSY:DIFF STEP FILTER | 80009 | 671-0748-01 |
| A4A1A3 | 671-0716-02 | | | CIRCUIT BD ASSY:LF NOISE FILTER | 80009 | 671-0716-02 |
| A4A1A4 | 671-0715-01 | 671-0695-01 | 671-0695-01 | CIRCUIT BD ASSY:LOWPASS FILTER | 80009 | 671-0715-01 |
| A4A1A4 | 671-0715-02 | 671-0695-01 | 671-0695-01 | CIRCUIT BD ASSY:LOW PASS FILTER | 80009 | 671-0715-02 |
| A4A1A4 | 671-1909-00 | 671-0695-02 | | CIRCUIT BD ASSY:IEEE LOW PASS FILTER | 80009 | 671-1909-00 |
| A4A1A5 | 671-0717-00 | 671-0695-02 | | CIRCUIT BD ASSY:NTSC BW LIMIT FILTER | 80009 | 671-0717-00 |
| A5 | 671-1051-00 | B022000 | B022006 | CIRCUIT BD ASSY:CPU II | 80009 | 671-1051-00 |
| A5 | 671-1051-01 | B022007 | B022030 | CIRCUIT BD ASSY:CPU II | 80009 | 671-1051-01 |
| A5 | 671-1051-02 | B022031 | B022149 | CIRCUIT BD ASSY:CPU II | 80009 | 671-1051-02 |
| A5 | 671-1051-03 | B022150 | B022293 | CIRCUIT BD ASSY:CPU II | 80009 | 671-1051-03 |
| A5 | 671-1051-04 | B022294 | B022601 | CIRCUIT BD ASSY:CPU II | 80009 | 671-1051-04 |
| A5 | 671-1051-05 | B022602 | B022999 | CIRCUIT BD ASSY:CPU | 80009 | 671-1051-05 |
| A5 | 671-1051-06 | B023000 | B030274 | CIRCUIT BD ASSY:CPU | 80009 | 671-1051-06 |
| A5 | 671-1051-07 | B030275 | | CIRCUIT BD ASSY:CPU | 80009 | 671-1051-07 |
| A6 | 672-1319-00 | B022000 | B022293 | CIRCUIT BD ASSY:EPROM | 80009 | 672-1319-00 |
| A6 | 672-1319-02 | B022294 | B022761 | CIRCUIT BD ASSY:EPROM | 80009 | 672-1319-02 |
| A6 | 672-1319-03 | B022762 | B023176 | CIRCUIT BD ASSY:EPROM | 80009 | 672-1319-03 |
| A6 | 671-1910-00 | B023177 | | CIRCUIT BD ASSY:FLASH EPROM/NVRAM,4M | 80009 | 671-1910-00 |
| A6 | 671-1910-01 | B030768 | | CIRCUIT BD ASSY:FLASH EPROM/NVRAM,5M (OPTION 11 ONLY) | 80009 | 671-1910-01 |
| A6 | 672-1346-00 | B022609 | B022725 | CIRCUIT BD ASSY:EPROM | 80009 | 672-1346-00 |
| A6 | 672-1346-01 | B022726 | B023000 | CIRCUIT BD ASSY:EPROM | 80009 | 672-1346-01 |
| A6 | 671-1910-00 | B023001 | B030767 | CIRCUIT BD ASSY:FLASH EPROM/NVRAM,4M | 80009 | 671-1910-00 |
| A6 | 671-1910-01 | B030768 | | CIRCUIT BD ASSY:FLASH EPROM/NVRAM,5M (OPTION 01 ONLY) | 80009 | 671-1910-01 |
| A6 | 672-0283-00 | B022609 | B022714 | CIRCUIT BD ASSY:EPROM | 80009 | 672-0283-00 |
| A6 | 672-0283-01 | B022715 | B022954 | CIRCUIT BD ASSY:EPROM | 80009 | 672-0283-01 |
| A6 | 671-1910-00 | B022955 | B030767 | CIRCUIT BD ASSY:FLASH EPROM/NVRAM,4M | 80009 | 671-1910-00 |
| A6 | 671-1910-01 | B030768 | | CIRCUIT BD ASSY:FLASH EPROM/NVRAM,5M (OPTION 01,11 DUAL ONLY) | 80009 | 671-1910-01 |

| Component No. | Tektronix Part No. | Serial/Assembly No. Effective | Dscont | Name & Description | Mfr. Code | Mfr. Part No. |
|---|---|---|---|---|---|---|
| A7 | 671-1306-00 | B022000 | B022470 | CIRCUIT BD ASSY:DATA ACQUISITION 2 | 80009 | 671-1306-00 |
| A7 | 671-1306-01 | B022471 | | CIRCUIT BD ASSY:DATA ACQUISITION 2 | 80009 | 671-1306-01 |
| A8 | 671-0534-03 | B022000 | B022149 | CIRCUIT BD ASSY:CONTROLLER ' | 80009 | 671-0534-03 |
| A8 | 671-0534-04 | B022150 | B022312 | CIRCUIT BD ASSY:CONTROLLER | 80009 | 671-0534-04 |
| A8 | 671-0534-05 | B022313 | B022765 | CIRCUIT BD ASSY:CONTROLLER | 80009 | 671-0534-05 |
| A8 | 671-0534-06 | B022766 | B030100 | CIRCUIT BD ASSY:CONTROLLER | 80009 | 671-0534-06 |
| A9 | 671-0533-02 | B022000 | B022352 | CIRCUIT BD ASSY:DISPLAY MEMORY II | 80009 | 671-0533-02 |
| A9 | 671-0533-05 | B022353 | | CIRCUIT BD ASSY:DISPLAY MEMORY II | 80009 | 671-0533-05 |
| A10 | 672-1299-03 | B022000 | B022805 | CIRCUIT BD ASSY:FRONT PANEL | 80009 | 672-1299-03 |
| A10 | 672-1299-04 | B022806 | B030246 | CIRCUIT BD ASSY:FRONT PANEL | 80009 | 672-1299-04 |
| A10 | 672-1299-05 | B030247 | B030499 | CIRCUIT BD ASSY:FRONT PANEL | 80009 | 672-1299-05 |
| A10 | 672-1299-06 | B030500 | | CIRCUIT BD ASSY:FRONT PANEL | 80009 | 672-1299-06 |
| A10A1 | ----- ----- | | | CIRCUIT BD ASSY:FRONT PANEL (FOR REPLACEMENT SEE A10) | | |
| A10A1A1 | ----- ----- | 672-1299-05 | | CIRCUIT BD ASSY:OSCILLATOR (FOR REPLACEMENT SEE A10) | | |
| A10A2 | ----- ----- | | | CIRCUIT BD ASSY:KEY (FOR REPLACEMENT SEE A10) | | |
| A11 | 672-1298-00 | | | CIRCUIT BD ASSY:MOTHER | 80009 | 672-1298-00 |
| A11A1 | 671-0114-00 | | | CIRCUIT BD ASSY:BUS INTERCONNECT | 80009 | 671-0114-00 |
| A11A2 | 671-0113-00 | | | CIRCUIT BD ASSY:MAIN INTERFACE,RIGHT | 80009 | 671-0113-00 |
| A11A3 | 671-0112-00 | | | CIRCUIT BD ASSY:MAIN INTERFACE,LEFT | 80009 | 671-0112-00 |
| A14 | 657-0072-03 | | | MODULAR SUBASSY:W/TOUCH PANEL (STANDARD ONLY) | 80009 | 657-0072-03 |
| A14 | 657-0088-01 | | | MODULAR SUBASSY:W/TOUCH PANEL,WHITE PHOSPHOR (OPTION 74 ONLY) | 80009 | 657-0088-01 |
| A14A1 | 657-0072-02 | | | MODULAR SUBASSY:DISPLAY MODULE ASSY FOR VM700 (STANDARD ONLY) | 80009 | 657-0072-02 |
| A14A1 | 657-0088-00 | | | MODULAR SUBASSY:DISPLAY MODULE ASSY FOR VM700A (OPTION 74 ONLY) | 80009 | 657-0088-00 |
| A14A1A1 | 671-1033-01 | | | CIRCUIT BD ASSY:TRP | 80009 | 671-1033-01 |
| A15 | 119-2630-01 | B022000 | | POWER SUPPLY:IN 115/230 47-63 HZ, OUT 5V 40A, 15V 3A, -15V 3A,12V (REPLACEABLE AS ASSEMBLY ONLY) | TK2361 | 119-2630-01 |
| A15 | 119-4258-00 | B030000 | B031029 | POWER SUPPLY:IN 115/230 47-63HZ,OUT 5V 40A, 15V 3A,15V 3A,12V 2.5,-5.2V 2A,VAR FAN OUT 12-24V | 80009 | 119-4258-00 |
| A15 | 119-4258-01 | B031030 | B031213 | POWER SUPPLY:IN 115/230 47-63HZ,OUT 5V 40A, 15V 3A,12V 2.5,-5.2V 2A,VAR FAN OUT 12-24V | 80009 | 119-4258-01 |
| A15 | 119-4258-02 | B031214 | | POWER SUPPLY:IN 115/230 47-63HZ,OUT 5V 40A, 15V 3A,12V 2.5,-5.2V 2A,VAR FAN OUT 12-24V | 80009 | 119-4258-02 |
| A15A1 | ----- ----- | | | CIRCUIT BD ASSY:POWER SUPPLY | | |
| A16 | 671-0111-00 | | | CIRCUIT BD ASSY:ON/OFF | 80009 | 671-0111-00 |
| A18 | 671-1911-00 | B030000 | B030139 | CIRCUIT BD ASSY:DATA ACQUISITION/CONTROLLER | 80009 | 671-1911-00 |
| A18 | 671-1911-01 | B030140 | B030217 | CIRCUIT BD ASSY:DATA ACQUISITION/CONTROLLER | 80009 | 671-1911-01 |
| A18 | 671-1911-02 | B030218 | B031048 | CIRCUIT BD ASSY:DATA ACQUISITION/CONTROLLER | 80009 | 671-1911-02 |
| A18 | 671-1911-03 | B031049 | B031198 | CIRCUIT BD ASSY:DATA ACQUISTION/CONTROLLER | 80009 | 671-1911-03 |
| A18 | 671-1911-04 | B031199 | B031223 | CIRCUIT BD ASSY:DATA ACQUISITION/CONTROLLER | 80009 | 671-1911-04 |
| A18 | 671-1911-05 | B031224 | | CIRCUIT BD ASSY:DATA ACQUISITION/CONTROLLER | 80009 | 671-1911-05 |
| A19 | 671-2337-00 | | | CIRCUIT BD ASSY:GPIB | 80009 | 671-2337-00 |

| Component No. | Tektronix Part No. | Serial/Assembly No. Effective | Dscont | Name & Description | Mfr. Code | Mfr. Part No. |
|---|---|---|---|---|---|---|
| A1 | 671-0535-05 | B022000 | B022447 | CIRCUIT BD ASSY:ANALOG INPUT | 80009 | 671-0535-05 |
| A1 | 671-0535-06 | B022448 | B022693 | CIRCUIT BD ASSY:ANALOG INPUT | 80009 | 671-0535-06 |
| A1 | 671-0535-07 | B022694 | B023422 | CIRCUIT BD ASSY:ANALOG INPUT | 80009 | 671-0535-07 |
| A1 | 671-0535-09 | B023423 | | CIRCUIT BD ASSY:ANALOG INPUT | 80009 | 671-0535-09 |
| | | | | *ATTACHED PARTS* | | |
| | 337-2816-00 | | | SHIELD,ELEC:CKT BD (QUANTITY 7) | 80009 | 337-2816-00 |
| | 337-3672-00 | | | SHIELD,ELEC:STICK ON,FINGER TYPE,6.0 L | 80009 | 337-3672-00 |
| | 386-5581-01 | | | PLATE,BNC:VM700A | 80009 | 386-5581-01 |
| | 348-0274-00 | | | SHLD GSKT,ELEK:FINGER TYPE | 30817 | 97-555CDC |
| | | | | *END ATTACHED PARTS* | | |
| A1C121 | 281-0775-02 | | | CAP,FXD,CERAMIC:MLC;0.1UF,20%,50V,X7R,0.265 X 0.100;AXIAL,T&R | 04222 | SA205C104MAA |
| A1C122 | 281-0775-02 | | | CAP,FXD,CERAMIC:MLC;0.1UF,20%,50V,X7R,0.265 X 0.100;AXIAL,T&R | 04222 | SA205C104MAA |
| A1C125 | 281-0810-00 | | | CAP,FXD,CER DI:5.6PF,+/-0.5PF,100V | 04222 | SA101A5R6DAA |
| A1C126 | 281-0775-02 | | | CAP,FXD,CERAMIC:MLC;0.1UF,20%,50V,X7R,0.265 X 0.100;AXIAL,T&R | 04222 | SA205C104MAA |
| A1C130 | 290-0745-00 | | | CAP,FXD,ELCTLT:22UF,+50-20%,25WVDC | 80009 | 290-0745-00 |
| A1C132 | 281-0775-02 | | | CAP,FXD,CERAMIC:MLC;0.1UF,20%,50V,X7R,0.265 X 0.100;AXIAL,T&R | 04222 | SA205C104MAA |
| A1C149 | 281-0809-00 | | | CAP,FXD,CER DI:200 PF,5%,100V | 04222 | SA101A201JAA |
| A1C159 | 281-0809-00 | | | CAP,FXD,CER DI:200 PF,5%,100V | 04222 | SA101A201JAA |
| A1C169 | 281-0809-00 | | | CAP,FXD,CER DI:200 PF,5%,100V | 04222 | SA101A201JAA |
| A1C170 | 281-0775-02 | | | CAP,FXD,CERAMIC:MLC;0.1UF,20%,50V,X7R,0.265 X 0.100;AXIAL,T&R | 04222 | SA205C104MAA |
| A1C178 | 283-0625-00 | | | CAP,FXD,MICA DI:220PF,1%,500V | 80009 | 283-0625-00 |
| A1C179 | 285-1062-00 | | | CAP,FXD,PLASTIC:0.005UF,1%,200V | 80009 | 285-1062-00 |
| A1C212 | 281-0775-02 | | | CAP,FXD,CERAMIC:MLC;0.1UF,20%,50V,X7R,0.265 X 0.100;AXIAL,T&R | 04222 | SA205C104MAA |
| A1C215 | 281-0775-02 | | | CAP,FXD,CERAMIC:MLC;0.1UF,20%,50V,X7R,0.265 X 0.100;AXIAL,T&R | 04222 | SA205C104MAA |
| A1C219 | 281-0770-00 | | | CAP,FXD,CER DI:1000PF,20%,100V | 04222 | SA101C102MAA |
| A1C220 | 281-0775-02 | | | CAP,FXD,CERAMIC:MLC;0.1UF,20%,50V,X7R,0.265 X 0.100;AXIAL,T&R | 04222 | SA205C104MAA |
| A1C221 | 281-0775-02 | | | CAP,FXD,CERAMIC:MLC;0.1UF,20%,50V,X7R,0.265 X 0.100;AXIAL,T&R | 04222 | SA205C104MAA |
| A1C222 | 285-1301-00 | | | CAP,FXD,PLASTIC:0.47UF,10%,63V | 80009 | 285-1301-00 |
| A1C223 | 281-0775-02 | | | CAP,FXD,CERAMIC:MLC;0.1UF,20%,50V,X7R,0.265 X 0.100;AXIAL,T&R | 04222 | SA205C104MAA |
| A1C236 | 281-0775-02 | | | CAP,FXD,CERAMIC:MLC;0.1UF,20%,50V,X7R,0.265 X 0.100;AXIAL,T&R | 04222 | SA205C104MAA |
| A1C238 | 281-0770-00 | | | CAP,FXD,CER DI:1000PF,20%,100V | 04222 | SA101C102MAA |
| A1C239 | 281-0770-00 | | | CAP,FXD,CER DI:1000PF,20%,100V | 04222 | SA101C102MAA |
| A1C243 | 281-0775-02 | | | CAP,FXD,CERAMIC:MLC;0.1UF,20%,50V,X7R,0.265 X 0.100;AXIAL,T&R | 04222 | SA205C104MAA |
| A1C250 | 281-0775-02 | | | CAP,FXD,CERAMIC:MLC;0.1UF,20%,50V,X7R,0.265 X 0.100;AXIAL,T&R | 04222 | SA205C104MAA |
| A1C262 | 281-0775-02 | | | CAP,FXD,CERAMIC:MLC;0.1UF,20%,50V,X7R,0.265 X 0.100;AXIAL,T&R | 04222 | SA205C104MAA |
| A1C263 | 281-0775-02 | | | CAP,FXD,CERAMIC:MLC;0.1UF,20%,50V,X7R,0.265 X 0.100;AXIAL,T&R | 04222 | SA205C104MAA |
| A1C264 | 281-0775-02 | | | CAP,FXD,CERAMIC:MLC;0.1UF,20%,50V,X7R,0.265 X 0.100;AXIAL,T&R | 04222 | SA205C104MAA |
| A1C271 | 281-0775-02 | | | CAP,FXD,CERAMIC:MLC;0.1UF,20%,50V,X7R,0.265 X 0.100;AXIAL,T&R | 04222 | SA205C104MAA |
| A1C272 | 281-0812-00 | | | CAP,FXD,CER DI:1000PF,10%,100V | 04222 | SA101C102KAA |
| A1C310 | 281-0775-02 | | | CAP,FXD,CERAMIC:MLC;0.1UF,20%,50V,X7R,0.265 X 0.100;AXIAL,T&R | 04222 | SA205C104MAA |
| A1C311 | 281-0709-00 | | | CAP,FXD,CER DI:7PF,+/-,0.1PF,500V | 80009 | 281-0709-00 |

| Component No. | Tektronix Part No. | Serial/Assembly No. Effective | Dscont | Name & Description | Mfr. Code | Mfr. Part No. |
|---|---|---|---|---|---|---|
| A1C313 | 283-0160-00 | | | CAP,FXD,CER DI:1.5PF,+/-0.1PF,50V | 80009 | 283-0160-00 |
| A1C324 | 281-0775-02 | | | CAP,FXD,CERAMIC:MLC;0.1UF,20%,50V,X7R,0.265 X 0.100;AXIAL,T&R | 04222 | SA205C104MAA |
| A1C325 | 283-0185-01 | 671-0535-05 | 671-0535-06 | CAP,FXD,CER:SLC;2.5PF,+/- 0.1PF,50V,COJ,.150 X .150;RADIAL,BULK | 59660 | 8111TXXXC0J0259B |
| A1C325 | 283-0185-01 | 671-0535-07 | | CAP,FXD,CER:SLC;2.5PF,+/- 0.1PF,50V,COJ,.150 X .150;RADIAL,BULK | 59660 | 8111TXXXC0J0259B |
| A1C332 | 281-0775-02 | | | CAP,FXD,CERAMIC:MLC;0.1UF,20%,50V,X7R,0.265 X 0.100;AXIAL,T&R | 04222 | SA205C104MAA |
| A1C333 | 281-0220-00 | | | CAP,VAR,CER DI:1.0-5.5PF,400VDC,PC MTG | 80009 | 281-0220-00 |
| A1C340 | 283-0743-00 | | | CAP,FXD,MICA DI:43PF,2%,500V | 80009 | 283-0743-00 |
| A1C342 | 281-0775-02 | | | CAP,FXD,CERAMIC:MLC;0.1UF,20%,50V,X7R,0.265 X 0.100;AXIAL,T&R | 04222 | SA205C104MAA |
| A1C350 | 281-0775-02 | | | CAP,FXD,CERAMIC:MLC;0.1UF,20%,50V,X7R,0.265 X 0.100;AXIAL,T&R | 04222 | SA205C104MAA |
| A1C355 | 290-0745-00 | | | CAP,FXD,ELCTLT:22UF,+50-20%,25WVDC | 80009 | 290-0745-00 |
| A1C371 | 281-0775-02 | | | CAP,FXD,CERAMIC:MLC;0.1UF,20%,50V,X7R,0.265 X 0.100;AXIAL,T&R | 04222 | SA205C104MAA |
| A1C372 | 281-0775-02 | | | CAP,FXD,CERAMIC:MLC;0.1UF,20%,50V,X7R,0.265 X 0.100;AXIAL,T&R | 04222 | SA205C104MAA |
| A1C373 | 281-0770-00 | | | CAP,FXD,CER DI:1000PF,20%,100V | 04222 | SA101C102MAA |
| A1C374 | 281-0770-00 | | | CAP,FXD,CER DI:1000PF,20%,100V | 04222 | SA101C102MAA |
| A1C375 | 281-0770-00 | | | CAP,FXD,CER DI:1000PF,20%,100V | 04222 | SA101C102MAA |
| A1C410 | 281-0775-02 | | | CAP,FXD,CERAMIC:MLC;0.1UF,20%,50V,X7R,0.265 X 0.100;AXIAL,T&R | 04222 | SA205C104MAA |
| A1C417 | 283-0160-00 | | | CAP,FXD,CER DI:1.5PF,+/-0.1PF,50V | 80009 | 283-0160-00 |
| A1C420 | 281-0775-02 | | | CAP,FXD,CERAMIC:MLC;0.1UF,20%,50V,X7R,0.265 X 0.100;AXIAL,T&R | 04222 | SA205C104MAA |
| A1C422 | 281-0775-02 | | | CAP,FXD,CERAMIC:MLC;0.1UF,20%,50V,X7R,0.265 X 0.100;AXIAL,T&R | 04222 | SA205C104MAA |
| A1C423 | 281-0775-02 | | | CAP,FXD,CERAMIC:MLC;0.1UF,20%,50V,X7R,0.265 X 0.100;AXIAL,T&R | 04222 | SA205C104MAA |
| A1C424 | 281-0770-00 | | | CAP,FXD,CER DI:1000PF,20%,100V | 04222 | SA101C102MAA |
| A1C430 | 281-0775-02 | | | CAP,FXD,CERAMIC:MLC;0.1UF,20%,50V,X7R,0.265 X 0.100;AXIAL,T&R | 04222 | SA205C104MAA |
| A1C431 | 281-0775-02 | | | CAP,FXD,CERAMIC:MLC;0.1UF,20%,50V,X7R,0.265 X 0.100;AXIAL,T&R | 04222 | SA205C104MAA |
| A1C432 | 281-0775-02 | | | CAP,FXD,CERAMIC:MLC;0.1UF,20%,50V,X7R,0.265 X 0.100;AXIAL,T&R | 04222 | SA205C104MAA |
| A1C433 | 281-0775-02 | | | CAP,FXD,CERAMIC:MLC;0.1UF,20%,50V,X7R,0.265 X 0.100;AXIAL,T&R | 04222 | SA205C104MAA |
| A1C434 | 285-1301-00 | | | CAP,FXD,PLASTIC:0.47UF,10%,63V | 80009 | 285-1301-00 |
| A1C435 | 281-0775-02 | | | CAP,FXD,CERAMIC:MLC;0.1UF,20%,50V,X7R,0.265 X 0.100;AXIAL,T&R | 04222 | SA205C104MAA |
| A1C440 | 283-0779-00 | | | CAP,FXD,MICA DI:27 PF,2%,500V | 80009 | 283-0779-00 |
| A1C443 | 281-0775-02 | | | CAP,FXD,CERAMIC:MLC;0.1UF,20%,50V,X7R,0.265 X 0.100;AXIAL,T&R | 04222 | SA205C104MAA |
| A1C444 | 281-0775-02 | | | CAP,FXD,CERAMIC:MLC;0.1UF,20%,50V,X7R,0.265 X 0.100;AXIAL,T&R | 04222 | SA205C104MAA |
| A1C451 | 281-0775-02 | | | CAP,FXD,CERAMIC:MLC;0.1UF,20%,50V,X7R,0.265 X 0.100;AXIAL,T&R | 04222 | SA205C104MAA |
| A1C452 | 281-0775-02 | | | CAP,FXD,CERAMIC:MLC;0.1UF,20%,50V,X7R,0.265 X 0.100;AXIAL,T&R | 04222 | SA205C104MAA |
| A1C453 | 281-0775-02 | | | CAP,FXD,CERAMIC:MLC;0.1UF,20%,50V,X7R,0.265 X 0.100;AXIAL,T&R | 04222 | SA205C104MAA |
| A1C455 | 283-0158-00 | 671-0535-05 | 671-0535-06 | CAP,FXD,CER DI:1PF,+/-0.1PF,50V | 80009 | 283-0158-00 |
| A1C455 | 283-0348-00 | 671-0535-07 | | CAP,FXD,CER DI:0.5PF,+/-0.1PF,100V | 80009 | 283-0348-00 |
| A1C456 | 281-0775-02 | | | CAP,FXD,CERAMIC:MLC;0.1UF,20%,50V,X7R,0.265 X 0.100;AXIAL,T&R | 04222 | SA205C104MAA |

| Component No. | Tektronix Part No. | Serial/Assembly No. Effective | Dscont | Name & Description | Mfr. Code | Mfr. Part No. |
|---|---|---|---|---|---|---|
| A1C457 | 281-0775-02 | | | CAP,FXD,CERAMIC:MLC;0.1UF,20%,50V,X7R,0.265 X 0.100;AXIAL,T&R | 04222 | SA205C104MAA |
| A1C460 | 281-0775-02 | | | CAP,FXD,CERAMIC:MLC;0.1UF,20%,50V,X7R,0.265 X 0.100;AXIAL,T&R | 04222 | SA205C104MAA |
| A1C471 | 281-0759-00 | | | CAP,FXD,CER DI:22PF,10%,100V | 80009 | 281-0759-00 |
| A1C472 | 281-0770-00 | | | CAP,FXD,CER DI:1000PF,20%,100V | 04222 | SA101C102MAA |
| A1C473 | 281-0770-00 | | | CAP,FXD,CER DI:1000PF,20%,100V | 04222 | SA101C102MAA |
| A1C474 | 281-0770-00 | | | CAP,FXD,CER DI:1000PF,20%,100V | 04222 | SA101C102MAA |
| A1C475 | 281-0770-00 | | | CAP,FXD,CER DI:1000PF,20%,100V | 04222 | SA101C102MAA |
| A1C476 | 281-0775-02 | | | CAP,FXD,CERAMIC:MLC;0.1UF,20%,50V,X7R,0.265 X 0.100;AXIAL,T&R | 04222 | SA205C104MAA |
| A1C514 | 281-0709-00 | | | CAP,FXD,CER DI:7PF,+/-,0.1PF,500V | 80009 | 281-0709-00 |
| A1C520 | 281-0775-02 | | | CAP,FXD,CERAMIC:MLC;0.1UF,20%,50V,X7R,0.265 X 0.100;AXIAL,T&R | 04222 | SA205C104MAA |
| A1C521 | 281-0775-02 | | | CAP,FXD,CERAMIC:MLC;0.1UF,20%,50V,X7R,0.265 X 0.100;AXIAL,T&R | 04222 | SA205C104MAA |
| A1C522 | 283-0185-01 | 671-0535-05 | 671-0535-06 | CAP,FXD,CER:SLC;2.5PF,+/- 0.1PF,50V,COJ,.150 X .150;RADIAL,BULK | 59660 | 8111TXXXC0J0259B |
| A1C522 | 283-0185-01 | 671-0535-07 | | CAP,FXD,CER:SLC;2.5PF,+/- 0.1PF,50V,COJ,.150 X .150;RADIAL,BULK | 59660 | 8111TXXXC0J0259B |
| A1C526 | 281-0220-00 | | | CAP,VAR,CER DI:1.0-5.5PF,400VDC,PC MTG | 80009 | 281-0220-00 |
| A1C530 | 281-0775-02 | | | CAP,FXD,CERAMIC:MLC;0.1UF,20%,50V,X7R,0.265 X 0.100;AXIAL,T&R | 04222 | SA205C104MAA |
| A1C531 | 281-0775-02 | | | CAP,FXD,CERAMIC:MLC;0.1UF,20%,50V,X7R,0.265 X 0.100;AXIAL,T&R | 04222 | SA205C104MAA |
| A1C532 | 281-0775-02 | | | CAP,FXD,CERAMIC:MLC;0.1UF,20%,50V,X7R,0.265 X 0.100;AXIAL,T&R | 04222 | SA205C104MAA |
| A1C533 | 281-0775-02 | | | CAP,FXD,CERAMIC:MLC;0.1UF,20%,50V,X7R,0.265 X 0.100;AXIAL,T&R | 04222 | SA205C104MAA |
| A1C535 | 281-0770-00 | | | CAP,FXD,CER DI:1000PF,20%,100V | 04222 | SA101C102MAA |
| A1C536 | 281-0770-00 | | | CAP,FXD,CER DI:1000PF,20%,100V | 04222 | SA101C102MAA |
| A1C540 | 283-0779-00 | | | CAP,FXD,MICA DI:27 PF,2%,500V | 80009 | 283-0779-00 |
| A1C542 | 281-0770-00 | | | CAP,FXD,CER DI:1000PF,20%,100V | 04222 | SA101C102MAA |
| A1C544 | 283-0743-00 | | | CAP,FXD,MICA DI:43PF,2%,500V | 80009 | 283-0743-00 |
| A1C545 | 281-0775-02 | | | CAP,FXD,CERAMIC:MLC;0.1UF,20%,50V,X7R,0.265 X 0.100;AXIAL,T&R | 04222 | SA205C104MAA |
| A1C552 | 281-0773-00 | | | CAP,FXD,CER DI:0.01UF,10%,100V | 80009 | 281-0773-00 |
| A1C555 | 290-0920-00 | | | CAP,FXD,ELCTLT:33UF,+50-20%,35WVDC | 55680 | UVX1H330MAA |
| A1C556 | 281-0775-02 | | | CAP,FXD,CERAMIC:MLC;0.1UF,20%,50V,X7R,0.265 X 0.100;AXIAL,T&R | 04222 | SA205C104MAA |
| A1C560 | 281-0775-02 | | | CAP,FXD,CERAMIC:MLC;0.1UF,20%,50V,X7R,0.265 X 0.100;AXIAL,T&R | 04222 | SA205C104MAA |
| A1C570 | 281-0770-00 | | | CAP,FXD,CER DI:1000PF,20%,100V | 04222 | SA101C102MAA |
| A1C571 | 281-0770-00 | | | CAP,FXD,CER DI:1000PF,20%,100V | 04222 | SA101C102MAA |
| A1C572 | 281-0770-00 | | | CAP,FXD,CER DI:1000PF,20%,100V | 04222 | SA101C102MAA |
| A1C573 | 281-0770-00 | | | CAP,FXD,CER DI:1000PF,20%,100V | 04222 | SA101C102MAA |
| A1C574 | 281-0770-00 | | | CAP,FXD,CER DI:1000PF,20%,100V | 04222 | SA101C102MAA |
| A1C575 | 281-0770-00 | | | CAP,FXD,CER DI:1000PF,20%,100V | 04222 | SA101C102MAA |
| A1C576 | 281-0770-00 | | | CAP,FXD,CER DI:1000PF,20%,100V | 04222 | SA101C102MAA |
| A1C577 | 281-0770-00 | | | CAP,FXD,CER DI:1000PF,20%,100V | 04222 | SA101C102MAA |
| A1C578 | 281-0775-02 | | | CAP,FXD,CERAMIC:MLC;0.1UF,20%,50V,X7R,0.265 X 0.100;AXIAL,T&R | 04222 | SA205C104MAA |
| A1C580 | 290-0973-00 | | | CAP,FXD,ELCTLT:100UF,20%,25VDC | 24165 | 513D107M025BB4D |
| A1C596 | 281-0775-02 | | | CAP,FXD,CERAMIC:MLC;0.1UF,20%,50V,X7R,0.265 X 0.100;AXIAL,T&R | 04222 | SA205C104MAA |
| A1C597 | 281-0775-02 | | | CAP,FXD,CERAMIC:MLC;0.1UF,20%,50V,X7R,0.265 X 0.100;AXIAL,T&R | 04222 | SA205C104MAA |
| A1C620 | 281-0775-02 | | | CAP,FXD,CERAMIC:MLC;0.1UF,20%,50V,X7R,0.265 X 0.100;AXIAL,T&R | 04222 | SA205C104MAA |

| Component No. | Tektronix Part No. | Serial/Assembly No. Effective | Dscont | Name & Description | Mfr. Code | Mfr. Part No. |
|---|---|---|---|---|---|---|
| A1C621 | 281-0775-02 | | | CAP,FXD,CERAMIC:MLC;0.1UF,20%,50V,X7R,0.265 X 0.100;AXIAL,T&R | 04222 | SA205C104MAA |
| A1C622 | 281-0775-02 | | | CAP,FXD,CERAMIC:MLC;0.1UF,20%,50V,X7R,0.265 X 0.100;AXIAL,T&R | 04222 | SA205C104MAA |
| A1C624 | 281-0775-02 | | | CAP,FXD,CERAMIC:MLC;0.1UF,20%,50V,X7R,0.265 X 0.100;AXIAL,T&R | 04222 | SA205C104MAA |
| A1C625 | 281-0770-00 | | | CAP,FXD,CER DI:1000PF,20%,100V | 04222 | SA101C102MAA |
| A1C637 | 281-0770-00 | | | CAP,FXD,CER DI:1000PF,20%,100V | 04222 | SA101C102MAA |
| A1C640 | 281-0775-02 | | | CAP,FXD,CERAMIC:MLC;0.1UF,20%,50V,X7R,0.265 X 0.100;AXIAL,T&R | 04222 | SA205C104MAA |
| A1C660 | 281-0773-00 | | | CAP,FXD,CER DI:0.01UF,10%,100V | 80009 | 281-0773-00 |
| A1C666 | 281-0775-02 | | | CAP,FXD,CERAMIC:MLC;0.1UF,20%,50V,X7R,0.265 X 0.100;AXIAL,T&R | 04222 | SA205C104MAA |
| A1C668 | 281-0775-02 | | | CAP,FXD,CERAMIC:MLC;0.1UF,20%,50V,X7R,0.265 X 0.100;AXIAL,T&R | 04222 | SA205C104MAA |
| A1C678 | 281-0775-02 | | | CAP,FXD,CERAMIC:MLC;0.1UF,20%,50V,X7R,0.265 X 0.100;AXIAL,T&R | 04222 | SA205C104MAA |
| A1C681 | 281-0775-02 | | | CAP,FXD,CERAMIC:MLC;0.1UF,20%,50V,X7R,0.265 X 0.100;AXIAL,T&R | 04222 | SA205C104MAA |
| A1C692 | 290-0973-00 | | | CAP,FXD,ELCTLT:100UF,20%,25VDC | 24165 | 513D107M025BB4D |
| A1C694 | 281-0775-02 | | | CAP,FXD,CERAMIC:MLC;0.1UF,20%,50V,X7R,0.265 X 0.100;AXIAL,T&R | 04222 | SA205C104MAA |
| A1C711 | 283-0160-00 | | | CAP,FXD,CER DI:1.5PF,+/-0.1PF,50V | 80009 | 283-0160-00 |
| A1C714 | 281-0709-00 | | | CAP,FXD,CER DI:7PF,+/-,0.1PF,500V | 80009 | 281-0709-00 |
| A1C721 | 281-0775-02 | | | CAP,FXD,CERAMIC:MLC;0.1UF,20%,50V,X7R,0.265 X 0.100;AXIAL,T&R | 04222 | SA205C104MAA |
| A1C722 | 281-0775-02 | | | CAP,FXD,CERAMIC:MLC;0.1UF,20%,50V,X7R,0.265 X 0.100;AXIAL,T&R | 04222 | SA205C104MAA |
| A1C724 | 283-0185-01 | 671-0535-05 | 671-0535-06 | CAP,FXD,CER:SLC;2.5PF,+/- 0.1PF,50V,COJ,.150 X .150;RADIAL,BULK | 59660 | 8111TXXXC0J0259B |
| A1C724 | 283-0185-01 | 671-0535-07 | | CAP,FXD,CER:SLC;2.5PF,+/- 0.1PF,50V,COJ,.150 X .150;RADIAL,BULK | 59660 | 8111TXXXC0J0259B |
| A1C727 | 281-0220-00 | | | CAP,VAR,CER DI:1.0-5.5PF,400VDC,PC MTG | 80009 | 281-0220-00 |
| A1C730 | 285-1301-00 | | | CAP,FXD,PLASTIC:0.47UF,10%,63V | 80009 | 285-1301-00 |
| A1C731 | 281-0775-02 | | | CAP,FXD,CERAMIC:MLC;0.1UF,20%,50V,X7R,0.265 X 0.100;AXIAL,T&R | 04222 | SA205C104MAA |
| A1C732 | 281-0775-02 | | | CAP,FXD,CERAMIC:MLC;0.1UF,20%,50V,X7R,0.265 X 0.100;AXIAL,T&R | 04222 | SA205C104MAA |
| A1C733 | 281-0775-02 | | | CAP,FXD,CERAMIC:MLC;0.1UF,20%,50V,X7R,0.265 X 0.100;AXIAL,T&R | 04222 | SA205C104MAA |
| A1C734 | 281-0775-02 | | | CAP,FXD,CERAMIC:MLC;0.1UF,20%,50V,X7R,0.265 X 0.100;AXIAL,T&R | 04222 | SA205C104MAA |
| A1C735 | 281-0775-02 | | | CAP,FXD,CERAMIC:MLC;0.1UF,20%,50V,X7R,0.265 X 0.100;AXIAL,T&R | 04222 | SA205C104MAA |
| A1C740 | 281-0775-02 | | | CAP,FXD,CERAMIC:MLC;0.1UF,20%,50V,X7R,0.265 X 0.100;AXIAL,T&R | 04222 | SA205C104MAA |
| A1C743 | 283-0779-00 | | | CAP,FXD,MICA DI:27 PF,2%,500V | 80009 | 283-0779-00 |
| A1C744 | 281-0775-02 | | | CAP,FXD,CERAMIC:MLC;0.1UF,20%,50V,X7R,0.265 X 0.100;AXIAL,T&R | 04222 | SA205C104MAA |
| A1C745 | 281-0775-02 | | | CAP,FXD,CERAMIC:MLC;0.1UF,20%,50V,X7R,0.265 X 0.100;AXIAL,T&R | 04222 | SA205C104MAA |
| A1C747 | 281-0775-02 | | | CAP,FXD,CERAMIC:MLC;0.1UF,20%,50V,X7R,0.265 X 0.100;AXIAL,T&R | 04222 | SA205C104MAA |
| A1C748 | 281-0775-02 | | | CAP,FXD,CERAMIC:MLC;0.1UF,20%,50V,X7R,0.265 X 0.100;AXIAL,T&R | 04222 | SA205C104MAA |
| A1C763 | 281-0775-02 | | | CAP,FXD,CERAMIC:MLC;0.1UF,20%,50V,X7R,0.265 X 0.100;AXIAL,T&R | 04222 | SA205C104MAA |
| A1C769 | 281-0775-02 | | | CAP,FXD,CERAMIC:MLC;0.1UF,20%,50V,X7R,0.265 X 0.100;AXIAL,T&R | 04222 | SA205C104MAA |

| Component No. | Tektronix Part No. | Serial/Assembly No. Effective | Dscont | Name & Description | Mfr. Code | Mfr. Part No. |
|---|---|---|---|---|---|---|
| A1C782 | 281-0775-02 | | | CAP,FXD,CERAMIC:MLC;0.1UF,20%,50V,X7R,0.265 X 0.100;AXIAL,T&R | 04222 | SA205C104MAA |
| A1C784 | 290-0973-00 | | | CAP,FXD,ELCTLT:100UF,20%,25VDC | 24165 | 513D107M025BB4D |
| A1C792 | 281-0775-02 | | | CAP,FXD,CERAMIC:MLC;0.1UF,20%,50V,X7R,0.265 X 0.100;AXIAL,T&R | 04222 | SA205C104MAA |
| A1C793 | 290-0943-01 | | | CAP,FXD,ELCTLT:47UF,20%,25V | 55680 | ULB1E470MPAANA1T |
| A1C797 | 290-0973-00 | | | CAP,FXD,ELCTLT:100UF,20%,25VDC | 24165 | 513D107M025BB4D |
| A1C798 | 290-0943-01 | | | CAP,FXD,ELCTLT:47UF,20%,25V | 55680 | ULB1E470MPAANA1T |
| A1C821 | 281-0775-02 | | | CAP,FXD,CERAMIC:MLC;0.1UF,20%,50V,X7R,0.265 X 0.100;AXIAL,T&R | 04222 | SA205C104MAA |
| A1C822 | 281-0775-02 | | | CAP,FXD,CERAMIC:MLC;0.1UF,20%,50V,X7R,0.265 X 0.100;AXIAL,T&R | 04222 | SA205C104MAA |
| A1C832 | 281-0775-02 | | | CAP,FXD,CERAMIC:MLC;0.1UF,20%,50V,X7R,0.265 X 0.100;AXIAL,T&R | 04222 | SA205C104MAA |
| A1C841 | 283-0743-00 | | | CAP,FXD,MICA DI:43PF,2%,500V | 80009 | 283-0743-00 |
| A1C842 | 281-0775-02 | | | CAP,FXD,CERAMIC:MLC;0.1UF,20%,50V,X7R,0.265 X 0.100;AXIAL,T&R | 04222 | SA205C104MAA |
| A1C843 | 283-0630-00 | | | CAP,FXD,MICA DI:110PF,1%,100V | 80009 | 283-0630-00 |
| A1C845 | 281-0775-02 | | | CAP,FXD,CERAMIC:MLC;0.1UF,20%,50V,X7R,0.265 X 0.100;AXIAL,T&R | 04222 | SA205C104MAA |
| A1C846 | 281-0775-02 | | | CAP,FXD,CERAMIC:MLC;0.1UF,20%,50V,X7R,0.265 X 0.100;AXIAL,T&R | 04222 | SA205C104MAA |
| A1C861 | 281-0775-02 | | | CAP,FXD,CERAMIC:MLC;0.1UF,20%,50V,X7R,0.265 X 0.100;AXIAL,T&R | 04222 | SA205C104MAA |
| A1C862 | 281-0759-00 | | | CAP,FXD,CER DI:22PF,10%,100V | 80009 | 281-0759-00 |
| A1C864 | 281-0775-02 | | | CAP,FXD,CERAMIC:MLC;0.1UF,20%,50V,X7R,0.265 X 0.100;AXIAL,T&R | 04222 | SA205C104MAA |
| A1C885 | 281-0775-02 | | | CAP,FXD,CERAMIC:MLC;0.1UF,20%,50V,X7R,0.265 X 0.100;AXIAL,T&R | 04222 | SA205C104MAA |
| A1C893 | 281-0775-02 | | | CAP,FXD,CERAMIC:MLC;0.1UF,20%,50V,X7R,0.265 X 0.100;AXIAL,T&R | 04222 | SA205C104MAA |
| A1C922 | 281-0182-00 | | | CAP,VAR,PLASTIC:1.8-10PF,300V | 19701 | 2805D1R810BH03F0 |
| A1C933 | 281-0775-02 | | | CAP,FXD,CERAMIC:MLC;0.1UF,20%,50V,X7R,0.265 X 0.100;AXIAL,T&R | 04222 | SA205C104MAA |
| A1C940 | 283-0181-00 | 671-0535-05 | 671-0535-06 | CAP,FXD,CER DI:1.8PF,+/-0.1%,100V | 80009 | 283-0181-00 |
| A1C942 | 281-0775-02 | | | CAP,FXD,CERAMIC:MLC;0.1UF,20%,50V,X7R,0.265 X 0.100;AXIAL,T&R | 04222 | SA205C104MAA |
| A1C943 | 281-0775-02 | | | CAP,FXD,CERAMIC:MLC;0.1UF,20%,50V,X7R,0.265 X 0.100;AXIAL,T&R | 04222 | SA205C104MAA |
| A1C944 | 281-0775-02 | | | CAP,FXD,CERAMIC:MLC;0.1UF,20%,50V,X7R,0.265 X 0.100;AXIAL,T&R | 04222 | SA205C104MAA |
| A1C945 | 283-0643-00 | | | CAP,FXD,MICA DI:22PF,0.5%,500V | 80009 | 283-0643-00 |
| A1C946 | 283-0629-00 | | | CAP,FXD,MICA DI:62PF,1%,500V | 80009 | 283-0629-00 |
| A1C956 | 283-0728-00 | | | CAP,FXD,MICA DI:120PF,1%,500V | 80009 | 283-0728-00 |
| A1C957 | 283-0643-00 | | | CAP,FXD,MICA DI:22PF,0.5%,500V | 80009 | 283-0643-00 |
| A1C977 | 290-0943-01 | | | CAP,FXD,ELCTLT:47UF,20%,25V | 55680 | ULB1E470MPAANA1T |
| A1C978 | 290-0943-01 | | | CAP,FXD,ELCTLT:47UF,20%,25V | 55680 | ULB1E470MPAANA1T |
| A1CR246 | 152-0141-02 | | | DIODE,SIG:,ULTRA FAST;40V,150MA,4NS,2PF;1N4152,DO-35,T&R | 80009 | 152-0141-02 |
| A1CR247 | 152-0141-02 | | | DIODE,SIG:,ULTRA FAST;40V,150MA,4NS,2PF;1N4152,DO-35,T&R | 80009 | 152-0141-02 |
| A1CR260 | 152-0141-02 | | | DIODE,SIG:,ULTRA FAST;40V,150MA,4NS,2PF;1N4152,DO-35,T&R | 80009 | 152-0141-02 |
| A1CR261 | 152-0141-02 | | | DIODE,SIG:,ULTRA FAST;40V,150MA,4NS,2PF;1N4152,DO-35,T&R | 80009 | 152-0141-02 |
| A1CR262 | 152-0141-02 | | | DIODE,SIG:,ULTRA FAST;40V,150MA,4NS,2PF;1N4152,DO-35,T&R | 80009 | 152-0141-02 |
| A1CR263 | 152-0141-02 | | | DIODE,SIG:,ULTRA FAST;40V,150MA,4NS,2PF;1N4152,DO-35,T&R | 80009 | 152-0141-02 |

| Component No. | Tektronix Part No. | Serial/Assembly No. Effective | Dscont | Name & Description | Mfr. Code | Mfr. Part No. |
|---|---|---|---|---|---|---|
| A1CR320 | 152-0040-00 | | | DIODE,RECT:,;600V,1A,50A IFSM;1N5061,DO-41, TR | 80009 | 152-0040-00 |
| A1CR417 | 152-0040-00 | | | DIODE,RECT:,;600V,1A,50A IFSM;1N5061,DO-41, TR | 80009 | 152-0040-00 |
| A1CR420 | 152-0141-02 | | | DIODE,SIG:,ULTRA FAST;40V,150MA,4NS,2PF;1N4152,DO-35,T&R | 80009 | 152-0141-02 |
| A1CR421 | 152-0141-02 | | | DIODE,SIG:,ULTRA FAST;40V,150MA,4NS,2PF;1N4152,DO-35,T&R | 80009 | 152-0141-02 |
| A1CR520 | 152-0141-02 | | | DIODE,SIG:,ULTRA FAST;40V,150MA,4NS,2PF;1N4152,DO-35,T&R | 80009 | 152-0141-02 |
| A1CR521 | 152-0141-02 | | | DIODE,SIG:,ULTRA FAST;40V,150MA,4NS,2PF;1N4152,DO-35,T&R | 80009 | 152-0141-02 |
| A1CR551 | 152-0066-00 | | | DIODE,RECT:,;400V,1A,IFSM = 30A;GP10G,DO-41,T&R,SAFETY CONTROLLED | 05828 | GP10G-020 |
| A1CR653 | 152-0141-02 | | | DIODE,SIG:,ULTRA FAST;40V,150MA,4NS,2PF;1N4152,DO-35,T&R | 80009 | 152-0141-02 |
| A1CR654 | 152-0141-02 | | | DIODE,SIG:,ULTRA FAST;40V,150MA,4NS,2PF;1N4152,DO-35,T&R | 80009 | 152-0141-02 |
| A1CR655 | 152-0141-02 | | | DIODE,SIG:,ULTRA FAST;40V,150MA,4NS,2PF;1N4152,DO-35,T&R | 80009 | 152-0141-02 |
| A1CR656 | 152-0141-02 | | | DIODE,SIG:,ULTRA FAST;40V,150MA,4NS,2PF;1N4152,DO-35,T&R | 80009 | 152-0141-02 |
| A1CR657 | 152-0141-02 | | | DIODE,SIG:,ULTRA FAST;40V,150MA,4NS,2PF;1N4152,DO-35,T&R | 80009 | 152-0141-02 |
| A1CR688 | 152-0040-00 | | | DIODE,RECT:,;600V,1A,50A IFSM;1N5061,DO-41, TR | 80009 | 152-0040-00 |
| A1CR689 | 152-0040-00 | | | DIODE,RECT:,;600V,1A,50A IFSM;1N5061,DO-41, TR | 80009 | 152-0040-00 |
| A1CR694 | 152-0040-00 | | | DIODE,RECT:,;600V,1A,50A IFSM;1N5061,DO-41, TR | 80009 | 152-0040-00 |
| A1CR714 | 152-0040-00 | | | DIODE,RECT:,;600V,1A,50A IFSM;1N5061,DO-41, TR | 80009 | 152-0040-00 |
| A1CR720 | 152-0141-02 | | | DIODE,SIG:,ULTRA FAST;40V,150MA,4NS,2PF;1N4152,DO-35,T&R | 80009 | 152-0141-02 |
| A1CR721 | 152-0141-02 | | | DIODE,SIG:,ULTRA FAST;40V,150MA,4NS,2PF;1N4152,DO-35,T&R | 80009 | 152-0141-02 |
| A1CR753 | 152-0141-02 | | | DIODE,SIG:,ULTRA FAST;40V,150MA,4NS,2PF;1N4152,DO-35,T&R | 80009 | 152-0141-02 |
| A1CR787 | 152-0141-02 | | | DIODE,SIG:,ULTRA FAST;40V,150MA,4NS,2PF;1N4152,DO-35,T&R | 80009 | 152-0141-02 |
| A1CR794 | 152-0040-00 | | | DIODE,RECT:,;600V,1A,50A IFSM;1N5061,DO-41, TR | 80009 | 152-0040-00 |
| A1CR826 | 152-0141-02 | | | DIODE,SIG:,ULTRA FAST;40V,150MA,4NS,2PF;1N4152,DO-35,T&R | 80009 | 152-0141-02 |
| A1CR831 | 152-0141-02 | | | DIODE,SIG:,ULTRA FAST;40V,150MA,4NS,2PF;1N4152,DO-35,T&R | 80009 | 152-0141-02 |
| A1CR832 | 152-0141-02 | | | DIODE,SIG:,ULTRA FAST;40V,150MA,4NS,2PF;1N4152,DO-35,T&R | 80009 | 152-0141-02 |
| A1CR835 | 152-0141-02 | | | DIODE,SIG:,ULTRA FAST;40V,150MA,4NS,2PF;1N4152,DO-35,T&R | 80009 | 152-0141-02 |
| A1CR837 | 152-0141-02 | | | DIODE,SIG:,ULTRA FAST;40V,150MA,4NS,2PF;1N4152,DO-35,T&R | 80009 | 152-0141-02 |
| A1CR881 | 152-0141-02 | | | DIODE,SIG:,ULTRA FAST;40V,150MA,4NS,2PF;1N4152,DO-35,T&R | 80009 | 152-0141-02 |
| A1CR882 | 152-0141-02 | | | DIODE,SIG:,ULTRA FAST;40V,150MA,4NS,2PF;1N4152,DO-35,T&R | 80009 | 152-0141-02 |
| A1CR883 | 152-0141-02 | | | DIODE,SIG:,ULTRA FAST;40V,150MA,4NS,2PF;1N4152,DO-35,T&R | 80009 | 152-0141-02 |
| A1E342 | 276-0543-02 | | | SHLD BEAD,ELEK:FERRITE | 28733 | ORDER BY DESCR |

| Component No. | Tektronix Part No. | Serial/Assembly No. Effective | Dscont | Name & Description | Mfr. Code | Mfr. Part No. |
|---|---|---|---|---|---|---|
| A1E644 | 276-0543-02 | | | SHLD BEAD,ELEK:FERRITE | 28733 | ORDER BY DESCR |
| A1F588 | 159-0208-00 | | | FUSE,WIRE LEAD:2A,125V,5 SEC | 75915 | 255002 |
| A1J110 | 131-3635-00 | 671-0535-05 | 671-0535-05 | CONN,RF JACK: | 00779 | 227676-1 |
| A1J110 | 131-3378-00 | 671-0535-06 | | CONN,RF JACK: | 00779 | 227677-1 |
| | | | | *MOUNTING PARTS* | | |
| | 210-1039-00 | | | WASHER,LOCK:0.521 ID,INT,0.025 THK,SST (QUANTITY 2) | 24931 | ORDER BY DESCR |
| | 213-0816-00 | | | SCREW,TPG,TC:2-56 X 0.188L,TYPE T,PNH,STL (QUANTITY 2) | TK0858 | ORDER BY DESCR |
| | 220-0497-00 | | | NUT,PLAIN,HEX:0.5-28 X 0.562 HEX,BRS CD PL (QUANTITY 2) | 80009 | 220-0497-00 |
| | | | | *END MOUNTING PARTS* | | |
| A1J132 | 131-0608-00 | | | TERMINAL,PIN:0.365 L X 0.025 BRZ GLD PL (QUANTITY 2) | 80009 | 131-0608-00 |
| A1J210 | 131-3635-00 | 671-0535-05 | 671-0535-05 | CONN,RF JACK: | 00779 | 227676-1 |
| A1J210 | 131-3378-00 | 671-0535-06 | | CONN,RF JACK: | 00779 | 227677-1 |
| | | | | *MOUNTING PARTS* | | |
| | 210-1039-00 | | | WASHER,LOCK:0.521 ID,INT,0.025 THK,SST (QUANTITY 2) | 24931 | ORDER BY DESCR |
| | 213-0816-00 | | | SCREW,TPG,TC:2-56 X 0.188L,TYPE T,PNH,STL (QUANTITY 2) | TK0858 | ORDER BY DESCR |
| | 220-0497-00 | | | NUT,PLAIN,HEX:0.5-28 X 0.562 HEX,BRS CD PL (QUANTITY 2) | 80009 | 220-0497-00 |
| | | | | *END MOUNTING PARTS* | | |
| A1J310 | 131-3635-00 | 671-0535-05 | 671-0535-05 | CONN,RF JACK: | 00779 | 227676-1 |
| A1J310 | 131-3378-00 | 671-0535-06 | | CONN,RF JACK: | 00779 | 227677-1 |
| | | | | *MOUNTING PARTS* | | |
| | 210-1039-00 | | | WASHER,LOCK:0.521 ID,INT,0.025 THK,SST (QUANTITY 2) | 24931 | ORDER BY DESCR |
| | 213-0816-00 | | | SCREW,TPG,TC:2-56 X 0.188L,TYPE T,PNH,STL (QUANTITY 2) | TK0858 | ORDER BY DESCR |
| | 220-0497-00 | | | NUT,PLAIN,HEX:0.5-28 X 0.562 HEX,BRS CD PL (QUANTITY 2) | 80009 | 220-0497-00 |
| | | | | *END MOUNTING PARTS* | | |
| A1J410 | 131-3635-00 | 671-0535-05 | 671-0535-05 | CONN,RF JACK: | 00779 | 227676-1 |
| A1J410 | 131-3378-00 | 671-0535-06 | | CONN,RF JACK: | 00779 | 227677-1 |
| | | | | *MOUNTING PARTS* | | |
| | 210-1039-00 | | | WASHER,LOCK:0.521 ID,INT,0.025 THK,SST (QUANTITY 2) | 24931 | ORDER BY DESCR |
| | 213-0816-00 | | | SCREW,TPG,TC:2-56 X 0.188L,TYPE T,PNH,STL (QUANTITY 2) | TK0858 | ORDER BY DESCR |
| | 220-0497-00 | | | NUT,PLAIN,HEX:0.5-28 X 0.562 HEX,BRS CD PL (QUANTITY 2) | 80009 | 220-0497-00 |
| | | | | *END MOUNTING PARTS* | | |
| A1J510 | 131-3635-00 | 671-0535-05 | 671-0535-05 | CONN,RF JACK: | 00779 | 227676-1 |
| A1J510 | 131-3378-00 | 671-0535-06 | | CONN,RF JACK: | 00779 | 227677-1 |
| | | | | *MOUNTING PARTS* | | |
| | 210-1039-00 | | | WASHER,LOCK:0.521 ID,INT,0.025 THK,SST (QUANTITY 2) | 24931 | ORDER BY DESCR |
| | 213-0816-00 | | | SCREW,TPG,TC:2-56 X 0.188L,TYPE T,PNH,STL (QUANTITY 2) | TK0858 | ORDER BY DESCR |
| | 220-0497-00 | | | NUT,PLAIN,HEX:0.5-28 X 0.562 HEX,BRS CD PL (QUANTITY 2) | 80009 | 220-0497-00 |
| | | | | *END MOUNTING PARTS* | | |
| A1J550 | 131-0391-00 | | | CONN,RF JACK: | 80009 | 131-0391-00 |
| | | | | *ATTACHED PARTS* | | |
| | 210-1160-00 | | | WASHER,FLAT:0.129 ID X 0.25 OD X 0.031 | 86928 | 5612-32-31 |
| | | | | *END ATTACHED PARTS* | | |
| A1J555 | 131-0608-00 | | | TERMINAL,PIN:0.365 L X 0.025 BRZ GLD PL (QUANTITY 3) | 80009 | 131-0608-00 |
| A1J610 | 131-3635-00 | 671-0535-05 | 671-0535-05 | CONN,RF JACK: | 00779 | 227676-1 |
| A1J610 | 131-3378-00 | 671-0535-06 | | CONN,RF JACK: | 00779 | 227677-1 |
| | | | | *MOUNTING PARTS* | | |
| | 210-1039-00 | | | WASHER,LOCK:0.521 ID,INT,0.025 THK,SST | 24931 | ORDER BY DESCR |

| Component No. | Tektronix Part No. | Serial/Assembly No. Effective | Dscont | Name & Description | Mfr. Code | Mfr. Part No. |
|---|---|---|---|---|---|---|
| | | | | (QUANTITY 2) | | |
| | 213-0816-00 | | | SCREW,TPG,TC:2-56 X 0.188L,TYPE T,PNH,STL (QUANTITY 2) | TK0858 | ORDER BY DESCR |
| | 220-0497-00 | | | NUT,PLAIN,HEX:0.5-28 X 0.562 HEX,BRS CD PL (QUANTITY 2) | 80009 | 220-0497-00 |
| | | | | *END MOUNTING PARTS* | | |
| A1J619 | 131-3635-00 | 671-0535-05 | 671-0535-05 | CONN,RF JACK: | 00779 | 227676-1 |
| A1J619 | 131-3378-00 | 671-0535-06 | | CONN,RF JACK: | 00779 | 227677-1 |
| | | | | *MOUNTING PARTS* | | |
| | 210-1039-00 | | | WASHER,LOCK:0.521 ID,INT,0.025 THK,SST (QUANTITY 2) | 24931 | ORDER BY DESCR |
| | 213-0816-00 | | | SCREW,TPG,TC:2-56 X 0.188L,TYPE T,PNH,STL (QUANTITY 2) | TK0858 | ORDER BY DESCR |
| | 220-0497-00 | | | NUT,PLAIN,HEX:0.5-28 X 0.562 HEX,BRS CD PL (QUANTITY 2) | 80009 | 220-0497-00 |
| | | | | *END MOUNTING PARTS* | | |
| A1J690 | 131-4136-00 | 671-0535-05 | 671-0535-07 | CONN,HDR PWR:PCB,;MALE,STR,1 X 10,0.156 CTR ,0.450 MLG X 0.172 TAIL,0.045 SQ,GOLD;,, | 27264 | 26-48-2101 |
| A1J690 | 131-4884-00 | 671-0535-08 | | CONN,HDR PWR: | 80009 | 131-4884-00 |
| A1J718 | 131-3635-00 | 671-0535-05 | 671-0535-05 | CONN,RF JACK: | 00779 | 227676-1 |
| A1J718 | 131-3378-00 | 671-0535-06 | | CONN,RF JACK: | 00779 | 227677-1 |
| | | | | *MOUNTING PARTS* | | |
| | 210-1039-00 | | | WASHER,LOCK:0.521 ID,INT,0.025 THK,SST (QUANTITY 2) | 24931 | ORDER BY DESCR |
| | 213-0816-00 | | | SCREW,TPG,TC:2-56 X 0.188L,TYPE T,PNH,STL (QUANTITY 2) | TK0858 | ORDER BY DESCR |
| | 220-0497-00 | | | NUT,PLAIN,HEX:0.5-28 X 0.562 HEX,BRS CD PL (QUANTITY 2) | 80009 | 220-0497-00 |
| | | | | *END MOUNTING PARTS* | | |
| A1J922 | 131-0608-00 | | | TERMINAL,PIN:0.365 L X 0.025 BRZ GLD PL (QUANTITY 2) | 80009 | 131-0608-00 |
| A1J923 | 131-0608-00 | | | TERMINAL,PIN:0.365 L X 0.025 BRZ GLD PL (QUANTITY 2) | 80009 | 131-0608-00 |
| A1J924 | 131-0608-00 | | | TERMINAL,PIN:0.365 L X 0.025 BRZ GLD PL (QUANTITY 3) | 80009 | 131-0608-00 |
| A1J955 | 131-0608-00 | | | TERMINAL,PIN:0.365 L X 0.025 BRZ GLD PL (QUANTITY 3) | 80009 | 131-0608-00 |
| A1J965 | 174-0839-00 | | | CA ASSY,SP,ELEC:60,30 AWG,9.2 L,RIBBON | 80009 | 174-0839-00 |
| A1K314 | 148-0147-00 | | | RELAY,ARMATURE:2 FORM C,1A,28VDC,COIL,5VDC, 62 OHMS | 11532 | 172-5 |
| A1K512 | 148-0147-00 | | | RELAY,ARMATURE:2 FORM C,1A,28VDC,COIL,5VDC, 62 OHMS | 11532 | 172-5 |
| A1K718 | 148-0147-00 | | | RELAY,ARMATURE:2 FORM C,1A,28VDC,COIL,5VDC, 62 OHMS | 11532 | 172-5 |
| A1L336 | 108-1417-00 | | | COIL,RF:45UH,2%,7 OHM | TK1345 | 108-1417-00 |
| A1L338 | 108-1417-00 | | | COIL,RF:45UH,2%,7 OHM | TK1345 | 108-1417-00 |
| A1L539 | 108-1417-00 | | | COIL,RF:45UH,2%,7 OHM | TK1345 | 108-1417-00 |
| A1L635 | 108-1417-00 | | | COIL,RF:45UH,2%,7 OHM | TK1345 | 108-1417-00 |
| A1L683 | 108-0422-00 | | | COIL,RF:FIXED,80UH | 80009 | 108-0422-00 |
| A1L737 | 108-1417-00 | | | COIL,RF:45UH,2%,7 OHM | TK1345 | 108-1417-00 |
| A1L782 | 108-0422-00 | | | COIL,RF:FIXED,80UH | 80009 | 108-0422-00 |
| A1L834 | 108-1417-00 | | | COIL,RF:45UH,2%,7 OHM | TK1345 | 108-1417-00 |
| A1L947 | 114-0310-00 | | | COIL,RF:VARIABLE,26-82UHON FORM 276-0231-00 W/MODIFIED LEADS | 80009 | 114-0310-00 |
| | | | | *ATTACHED PARTS* | | |
| | 337-1417-00 | | | SHIELD,ELEC:0.55 SQ X 0.685 INCH HIGH | 32436 | A-1020002-1 |
| | | | | *END ATTACHED PARTS* | | |
| A1L955 | 114-0310-00 | | | COIL,RF:VARIABLE,26-82UHON FORM 276-0231-00 W/MODIFIED LEADS | 80009 | 114-0310-00 |
| | | | | *ATTACHED PARTS* | | |
| | 337-1417-00 | | | SHIELD,ELEC:0.55 SQ X 0.685 INCH HIGH | 32436 | A-1020002-1 |
| | | | | *END ATTACHED PARTS* | | |

| Component No. | Tektronix Part No. | Serial/Assembly No. Effective | Dscont | Name & Description | Mfr. Code | Mfr. Part No. |
|---|---|---|---|---|---|---|
| A1P555 | 131-0993-02 | | | BUS,CONDUCTOR:SHUNT ASSEMBLY,RED | 00779 | 1-850100-0 |
| A1P924 | 131-0993-02 | | | BUS,CONDUCTOR:SHUNT ASSEMBLY,RED | 00779 | 1-850100-0 |
| A1Q114 | 151-0190-00 | | | TRANSISTOR,SIG:BIPOLAR,NPN;40V,200MA,300MHZ ,AMPLIFIER;2N3904,TO-92 EBC | 80009 | 151-0190-00 |
| A1Q119 | 151-0190-00 | | | TRANSISTOR,SIG:BIPOLAR,NPN;40V,200MA,300MHZ ,AMPLIFIER;2N3904,TO-92 EBC | 80009 | 151-0190-00 |
| A1Q131 | 151-0188-00 | | | TRANSISTOR,SIG:BIPOLAR,PNP;40V,200MA,250MHZ ,AMPLIFIER;2N3906,TO-92 EBC | 80009 | 151-0188-00 |
| A1Q217 | 151-0301-00 | | | TRANSISTOR,SIG:BIPOLAR,PNP;60V,600MA,200MHZ ,AMPLIFIER;2N2907A,TO-18 | 80009 | 151-0301-00 |
| A1Q222 | 151-0190-00 | | | TRANSISTOR,SIG:BIPOLAR,NPN;40V,200MA,300MHZ ,AMPLIFIER;2N3904,TO-92 EBC | 80009 | 151-0190-00 |
| A1Q238 | 151-0190-00 | | | TRANSISTOR,SIG:BIPOLAR,NPN;40V,200MA,300MHZ ,AMPLIFIER;2N3904,TO-92 EBC | 80009 | 151-0190-00 |
| A1Q239 | 151-0190-00 | | | TRANSISTOR,SIG:BIPOLAR,NPN;40V,200MA,300MHZ ,AMPLIFIER;2N3904,TO-92 EBC | 80009 | 151-0190-00 |
| A1Q246 | 151-0188-00 | | | TRANSISTOR,SIG:BIPOLAR,PNP;40V,200MA,250MHZ ,AMPLIFIER;2N3906,TO-92 EBC | 80009 | 151-0188-00 |
| A1Q247 | 151-0188-00 | | | TRANSISTOR,SIG:BIPOLAR,PNP;40V,200MA,250MHZ ,AMPLIFIER;2N3906,TO-92 EBC | 80009 | 151-0188-00 |
| A1Q248 | 151-0188-00 | | | TRANSISTOR,SIG:BIPOLAR,PNP;40V,200MA,250MHZ ,AMPLIFIER;2N3906,TO-92 EBC | 80009 | 151-0188-00 |
| A1Q260 | 151-0188-00 | | | TRANSISTOR,SIG:BIPOLAR,PNP;40V,200MA,250MHZ ,AMPLIFIER;2N3906,TO-92 EBC | 80009 | 151-0188-00 |
| A1Q261 | 151-0188-00 | | | TRANSISTOR,SIG:BIPOLAR,PNP;40V,200MA,250MHZ ,AMPLIFIER;2N3906,TO-92 EBC | 80009 | 151-0188-00 |
| A1Q262 | 151-0188-00 | | | TRANSISTOR,SIG:BIPOLAR,PNP;40V,200MA,250MHZ ,AMPLIFIER;2N3906,TO-92 EBC | 80009 | 151-0188-00 |
| A1Q263 | 151-0188-00 | | | TRANSISTOR,SIG:BIPOLAR,PNP;40V,200MA,250MHZ ,AMPLIFIER;2N3906,TO-92 EBC | 80009 | 151-0188-00 |
| A1Q264 | 151-0188-00 | | | TRANSISTOR,SIG:BIPOLAR,PNP;40V,200MA,250MHZ ,AMPLIFIER;2N3906,TO-92 EBC | 80009 | 151-0188-00 |
| A1Q265 | 151-0188-00 | | | TRANSISTOR,SIG:BIPOLAR,PNP;40V,200MA,250MHZ ,AMPLIFIER;2N3906,TO-92 EBC | 80009 | 151-0188-00 |
| A1Q342 | 151-1022-00 | | | TRANSISTOR,SIG:JFET,N-CH;4V,75MA,80 OHM,SEL ECTED FOR VGS(OFF);2N4392 FAMILY,TO-18 | 80009 | 151-1022-00 |
| A1Q344 | 151-0220-00 | | | TRANSISTOR,SIG:BIPOLAR,PNP;40V,200MA,400MHZ ,AMPLIFIER;2N3906(SEL),TO-92 EBC | 80009 | 151-0220-00 |
| A1Q352 | 151-0302-00 | | | TRANSISTOR,SIG:BIPOLAR,NPN;40V,800MA,300MHZ ,AMPLIFIER;2N2222A,TO-18 | 80009 | 151-0302-00 |
| A1Q416 | 151-0301-00 | | | TRANSISTOR,SIG:BIPOLAR,PNP;60V,600MA,200MHZ ,AMPLIFIER;2N2907A,TO-18 | 80009 | 151-0301-00 |
| A1Q548 | 151-0220-00 | | | TRANSISTOR,SIG:BIPOLAR,PNP;40V,200MA,400MHZ ,AMPLIFIER;2N3906(SEL),TO-92 EBC | 80009 | 151-0220-00 |
| A1Q644 | 151-1022-00 | | | TRANSISTOR,SIG:JFET,N-CH;4V,75MA,80 OHM,SEL ECTED FOR VGS(OFF);2N4392 FAMILY,TO-18 | 80009 | 151-1022-00 |
| A1Q654 | 151-0272-00 | | | TRANSISTOR:PNP,SI,TO-78 | 80009 | 151-0272-00 |
| A1Q656 | 151-0712-00 | | | TRANSISTOR,SIG:BIPOLAR,PNP;20V,50MA,600MHZ, AMPLIFIER;MPSH81,TO-92 BEC | 80009 | 151-0712-00 |
| A1Q658 | 151-0220-00 | | | TRANSISTOR,SIG:BIPOLAR,PNP;40V,200MA,400MHZ ,AMPLIFIER;2N3906(SEL),TO-92 EBC | 80009 | 151-0220-00 |
| | | | | *MOUNTING PARTS* | | |
| | 136-0252-01 | | | SOCKET,PIN TERM: (QUANTITY 3) | 00779 | 1-332095-2 |
| | | | | *END MOUNTING PARTS* | | |
| A1Q753 | 151-0298-00 | | | TRANSISTOR,SIG:BIPOLAR,NPN;12V,40MA,3.5GHZ, AMPLIFIER;MRF914,TO-72 | 80009 | 151-0298-00 |
| A1Q754 | 151-0298-00 | | | TRANSISTOR,SIG:BIPOLAR,NPN;12V,40MA,3.5GHZ, AMPLIFIER;MRF914,TO-72 | 80009 | 151-0298-00 |

| Component No. | Tektronix Part No. | Serial/Assembly No. Effective | Dscont | Name & Description | Mfr. Code | Mfr. Part No. |
|---|---|---|---|---|---|---|
| A1Q755 | 151-0427-00 | | | TRANSISTOR,SIG:BIPOLAR,NPN;15V,50MA,900 MHZ ,AMPLIFIER;2N5770,TO-92 EBC | 80009 | 151-0427-00 |
| A1Q788 | 151-0406-00 | | | TRANSISTOR,SIG:BIPOLAR,PNP;175V,1.0A,200MHZ ,AMPLIFIER;2N3637,TO-39 | 80009 | 151-0406-00 |
| A1Q796 | 151-0407-00 | | | TRANSISTOR:NPN,SI,TO-39 | 80009 | 151-0407-00 |
| A1Q813 | 151-0301-00 | | | TRANSISTOR,SIG:BIPOLAR,PNP;60V,600MA,200MHZ ,AMPLIFIER;2N2907A,TO-18 | 80009 | 151-0301-00 |
| A1Q835 | 151-0272-00 | | | TRANSISTOR:PNP,SI,TO-78 | 80009 | 151-0272-00 |
| A1Q850 | 151-0272-00 | | | TRANSISTOR:PNP,SI,TO-78 | 80009 | 151-0272-00 |
| A1Q877 | 151-0710-00 | | | TRANSISTOR,SIG:BIPOLAR,NPN;40V,1.0A,50MHZ,A MPLIFIER;2N6715/MPSW01A,TO-237/TO-226AE | 80009 | 151-0710-00 |
| A1Q878 | 151-0622-00 | | | TRANSISTOR,SIG:BIPOLAR,PNP;40V,1.0A,50MHZ,A MPLIFIER;2N6727/MPS6727/MPSW51A,TO-237/TO-2 26AE EBC | 80009 | 151-0622-00 |
| A1Q928 | 151-0459-00 | | | TRANSISTOR:PNP,SI,TO-18 | 80009 | 151-0459-00 |
| A1R111 | 322-3211-00 | | | RES,FXD,FILM:1.54K OHM,1%,0.2W,TC=T0 | 80009 | 322-3211-00 |
| A1R112 | 322-3093-00 | | | RES,FXD,FILM:90.9 OHM,1%,0.2W,TC=T0 | 91637 | CCF50-2F90R90F |
| A1R113 | 322-3093-00 | | | RES,FXD,FILM:90.9 OHM,1%,0.2W,TC=T0 | 91637 | CCF50-2F90R90F |
| A1R114 | 322-3211-00 | | | RES,FXD,FILM:1.54K OHM,1%,0.2W,TC=T0 | 80009 | 322-3211-00 |
| A1R115 | 321-0348-00 | | | RES,FXD,FILM:41.2K OHM,1%,0.125W,TC=T0 | 80009 | 321-0348-00 |
| A1R116 | 315-0102-00 | | | RES,FXD,FILM:1K OHM,5%,0.25W | 80009 | 315-0102-00 |
| A1R121 | 322-3227-00 | | | RES,FXD,FILM:2.26K OHM,1%,0.2W,TC=T0 | 80009 | 322-3227-00 |
| A1R122 | 315-0102-00 | | | RES,FXD,FILM:1K OHM,5%,0.25W | 80009 | 315-0102-00 |
| A1R123 | 315-0101-00 | | | RES,FXD,FILM:100 OHM,5%,0.25W | 80009 | 315-0101-00 |
| A1R124 | 321-0261-00 | | | RES,FXD,FILM:5.11K OHM,1%,0.125W,TC=T0 | 80009 | 321-0261-00 |
| A1R125 | 315-0112-00 | | | RES,FXD,FILM:1.1K OHM,5%,0.25W | 80009 | 315-0112-00 |
| A1R130 | 315-0221-00 | | | RES,FXD,FILM:220 OHM,5%,0.25W | 80009 | 315-0221-00 |
| A1R131 | 315-0100-00 | | | RES,FXD,FILM:10 OHM,5%,0.25W | 19701 | 5043CX10RR00J |
| A1R132 | 315-0103-00 | | | RES,FXD,FILM:10K OHM,5%,0.25W | 80009 | 315-0103-00 |
| A1R133 | 315-0103-00 | | | RES,FXD,FILM:10K OHM,5%,0.25W | 80009 | 315-0103-00 |
| A1R140 | 315-0753-00 | | | RES,FXD,FILM:75K OHM,5%,0.25W | 80009 | 315-0753-00 |
| A1R141 | 315-0753-00 | | | RES,FXD,FILM:75K OHM,5%,0.25W | 80009 | 315-0753-00 |
| A1R142 | 315-0102-00 | | | RES,FXD,FILM:1K OHM,5%,0.25W | 80009 | 315-0102-00 |
| A1R143 | 315-0103-00 | | | RES,FXD,FILM:10K OHM,5%,0.25W | 80009 | 315-0103-00 |
| A1R144 | 315-0102-00 | | | RES,FXD,FILM:1K OHM,5%,0.25W | 80009 | 315-0102-00 |
| A1R145 | 315-0201-00 | | | RES,FXD,FILM:200 OHM,5%,0.25W | 80009 | 315-0201-00 |
| A1R146 | 315-0393-00 | | | RES,FXD,FILM:39K OHM,5%,0.25W | 80009 | 315-0393-00 |
| A1R147 | 315-0203-00 | | | RES,FXD,FILM:20K OHM,5%,0.25W | 80009 | 315-0203-00 |
| A1R148 | 315-0393-00 | | | RES,FXD,FILM:39K OHM,5%,0.25W | 80009 | 315-0393-00 |
| A1R149 | 315-0362-00 | | | RES,FXD,FILM:3.6K OHM,5%,0.25W | 80009 | 315-0362-00 |
| A1R160 | 315-0201-00 | | | RES,FXD,FILM:200 OHM,5%,0.25W | 80009 | 315-0201-00 |
| A1R161 | 315-0362-00 | | | RES,FXD,FILM:3.6K OHM,5%,0.25W | 80009 | 315-0362-00 |
| A1R162 | 315-0393-00 | | | RES,FXD,FILM:39K OHM,5%,0.25W | 80009 | 315-0393-00 |
| A1R163 | 315-0203-00 | | | RES,FXD,FILM:20K OHM,5%,0.25W | 80009 | 315-0203-00 |
| A1R164 | 315-0393-00 | | | RES,FXD,FILM:39K OHM,5%,0.25W | 80009 | 315-0393-00 |
| A1R165 | 315-0201-00 | | | RES,FXD,FILM:200 OHM,5%,0.25W | 80009 | 315-0201-00 |
| A1R166 | 315-0393-00 | | | RES,FXD,FILM:39K OHM,5%,0.25W | 80009 | 315-0393-00 |
| A1R167 | 315-0203-00 | | | RES,FXD,FILM:20K OHM,5%,0.25W | 80009 | 315-0203-00 |
| A1R168 | 315-0393-00 | | | RES,FXD,FILM:39K OHM,5%,0.25W | 80009 | 315-0393-00 |
| A1R169 | 315-0362-00 | | | RES,FXD,FILM:3.6K OHM,5%,0.25W | 80009 | 315-0362-00 |
| A1R178 | 321-0307-00 | | | RES,FXD,FILM:15.4K OHM,1%,0.125W,TC=T0 | 80009 | 321-0307-00 |
| A1R211 | 315-0102-00 | | | RES,FXD,FILM:1K OHM,5%,0.25W | 80009 | 315-0102-00 |
| A1R212 | 315-0102-00 | | | RES,FXD,FILM:1K OHM,5%,0.25W | 80009 | 315-0102-00 |
| A1R213 | 315-0102-00 | | | RES,FXD,FILM:1K OHM,5%,0.25W | 80009 | 315-0102-00 |
| A1R215 | 315-0100-00 | | | RES,FXD,FILM:10 OHM,5%,0.25W | 19701 | 5043CX10RR00J |
| A1R220 | 315-0100-00 | | | RES,FXD,FILM:10 OHM,5%,0.25W | 19701 | 5043CX10RR00J |
| A1R221 | 315-0362-00 | | | RES,FXD,FILM:3.6K OHM,5%,0.25W | 80009 | 315-0362-00 |
| A1R223 | 315-0621-00 | | | RES,FXD,FILM:620 OHM,5%,0.25W | 80009 | 315-0621-00 |
| A1R230 | 315-0102-00 | | | RES,FXD,FILM:1K OHM,5%,0.25W | 80009 | 315-0102-00 |

| Component No. | Tektronix Part No. | Serial/Assembly No. Effective | Dscont | Name & Description | Mfr. Code | Mfr. Part No. |
|---|---|---|---|---|---|---|
| A1R231 | 315-0103-00 | | | RES,FXD,FILM:10K OHM,5%,0.25W | 80009 | 315-0103-00 |
| A1R232 | 315-0753-00 | | | RES,FXD,FILM:75K OHM,5%,0.25W | 80009 | 315-0753-00 |
| A1R233 | 315-0103-00 | | | RES,FXD,FILM:10K OHM,5%,0.25W | 80009 | 315-0103-00 |
| A1R234 | 315-0103-00 | | | RES,FXD,FILM:10K OHM,5%,0.25W | 80009 | 315-0103-00 |
| A1R235 | 315-0102-00 | | | RES,FXD,FILM:1K OHM,5%,0.25W | 80009 | 315-0102-00 |
| A1R236 | 315-0102-00 | | | RES,FXD,FILM:1K OHM,5%,0.25W | 80009 | 315-0102-00 |
| A1R237 | 315-0103-00 | | | RES,FXD,FILM:10K OHM,5%,0.25W | 80009 | 315-0103-00 |
| A1R238 | 315-0205-00 | | | RES,FXD,FILM:2M OHM,5%,0.25W | 80009 | 315-0205-00 |
| A1R239 | 315-0103-00 | | | RES,FXD,FILM:10K OHM,5%,0.25W | 80009 | 315-0103-00 |
| A1R240 | 315-0205-00 | | | RES,FXD,FILM:2M OHM,5%,0.25W | 80009 | 315-0205-00 |
| A1R241 | 315-0303-00 | | | RES,FXD,FILM:30K OHM,5%,0.25W | 80009 | 315-0303-00 |
| A1R242 | 315-0103-00 | | | RES,FXD,FILM:10K OHM,5%,0.25W | 80009 | 315-0103-00 |
| A1R243 | 315-0103-00 | | | RES,FXD,FILM:10K OHM,5%,0.25W | 80009 | 315-0103-00 |
| A1R244 | 315-0102-00 | | | RES,FXD,FILM:1K OHM,5%,0.25W | 80009 | 315-0102-00 |
| A1R245 | 315-0102-00 | | | RES,FXD,FILM:1K OHM,5%,0.25W | 80009 | 315-0102-00 |
| A1R246 | 315-0102-00 | | | RES,FXD,FILM:1K OHM,5%,0.25W | 80009 | 315-0102-00 |
| A1R247 | 315-0104-00 | | | RES,FXD,FILM:100K OHM,5%,0.25W | 80009 | 315-0104-00 |
| A1R250 | 321-0274-00 | | | RES,FXD,FILM:6.98K OHM,1%,0.125W,TC=T0 | 80009 | 321-0274-00 |
| A1R251 | 321-0303-00 | | | RES,FXD,FILM:14.0K OHM,1%,0.125W,TC=T0 | 07716 | CEAD 14001F |
| A1R252 | 322-3304-00 | | | RES,FXD,FILM:14.3K OHM,1%,0.2W,TC=T0 | 80009 | 322-3304-00 |
| A1R253 | 315-0102-00 | | | RES,FXD,FILM:1K OHM,5%,0.25W | 80009 | 315-0102-00 |
| A1R254 | 315-0102-00 | | | RES,FXD,FILM:1K OHM,5%,0.25W | 80009 | 315-0102-00 |
| A1R255 | 322-3304-00 | | | RES,FXD,FILM:14.3K OHM,1%,0.2W,TC=T0 | 80009 | 322-3304-00 |
| A1R256 | 321-0274-00 | | | RES,FXD,FILM:6.98K OHM,1%,0.125W,TC=T0 | 80009 | 321-0274-00 |
| A1R257 | 321-0303-00 | | | RES,FXD,FILM:14.0K OHM,1%,0.125W,TC=T0 | 07716 | CEAD 14001F |
| A1R259 | 315-0151-00 | | | RES,FXD,FILM:150 OHM,5%,0.25W | 80009 | 315-0151-00 |
| A1R260 | 315-0102-00 | | | RES,FXD,FILM:1K OHM,5%,0.25W | 80009 | 315-0102-00 |
| A1R261 | 315-0102-00 | | | RES,FXD,FILM:1K OHM,5%,0.25W | 80009 | 315-0102-00 |
| A1R262 | 315-0100-00 | | | RES,FXD,FILM:10 OHM,5%,0.25W | 19701 | 5043CX10RR00J |
| A1R263 | 321-0347-00 | | | RES,FXD,FILM:40.2K OHM,1%,0.125W,TC=T0 | 80009 | 321-0347-00 |
| A1R264 | 321-0288-00 | | | RES,FXD,FILM:9.76K OHM,1%,0.125W,TC=T0 | 80009 | 321-0288-00 |
| A1R265 | 322-3223-00 | | | RES,FXD,FILM:2.05K OHM,1%,0.2W,TC=T0 | 80009 | 322-3223-00 |
| A1R266 | 315-0182-00 | | | RES,FXD,FILM:1.8K OHM,5%,0.25W | 80009 | 315-0182-00 |
| A1R268 | 321-0191-09 | | | RES,FXD,FILM:953 OHM,1%,0.125W,TC=T9 | 01121 | ORDER BY DESCR |
| A1R269 | 311-0622-00 | | | RES,VAR,NONWW:TRMR,100 OHM,0.5W | 80009 | 311-0622-00 |
| A1R270 | 321-0303-00 | | | RES,FXD,FILM:14.0K OHM,1%,0.125W,TC=T0 | 07716 | CEAD 14001F |
| A1R271 | 321-0274-00 | | | RES,FXD,FILM:6.98K OHM,1%,0.125W,TC=T0 | 80009 | 321-0274-00 |
| A1R272 | 322-3304-00 | | | RES,FXD,FILM:14.3K OHM,1%,0.2W,TC=T0 | 80009 | 322-3304-00 |
| A1R274 | 322-3318-00 | | | RES,FXD:METAL FILM;20K OHM,1%,0.2W,TC=100 PPM;AXIAL,T&R,SMALL BODY | 57668 | CRB20 FXE 20K0 |
| A1R275 | 315-0222-00 | | | RES,FXD,FILM:2.2K OHM,5%,0.25W | 80009 | 315-0222-00 |
| A1R276 | 315-0203-00 | | | RES,FXD,FILM:20K OHM,5%,0.25W | 80009 | 315-0203-00 |
| A1R277 | 315-0203-00 | | | RES,FXD,FILM:20K OHM,5%,0.25W | 80009 | 315-0203-00 |
| A1R278 | 315-0100-00 | | | RES,FXD,FILM:10 OHM,5%,0.25W | 19701 | 5043CX10RR00J |
| A1R310 | 315-0222-00 | | | RES,FXD,FILM:2.2K OHM,5%,0.25W | 80009 | 315-0222-00 |
| A1R311 | 315-0222-00 | | | RES,FXD,FILM:2.2K OHM,5%,0.25W | 80009 | 315-0222-00 |
| A1R313 | 315-0203-00 | | | RES,FXD,FILM:20K OHM,5%,0.25W | 80009 | 315-0203-00 |
| A1R316 | 311-0622-00 | | | RES,VAR,NONWW:TRMR,100 OHM,0.5W | 80009 | 311-0622-00 |
| A1R320 | 322-3293-00 | | | RES,FXD:METAL FILM;11K OHM,1%,0.2W,TC=100 PPM;AXIAL,T&R,SMALL BODY | 80009 | 322-3293-00 |
| A1R321 | 322-3289-00 | | | RES,FXD:METAL FILM;10K OHM,1%,0.2W,TC=100 PPM;AXIAL,T&R,SMALL BODY | 80009 | 322-3289-00 |
| A1R322 | 321-1731-00 | | | RES,FXD,FILM:500K OHM,1%,0.125W,TC=T0 | 80009 | 321-1731-00 |
| A1R323 | 321-0618-00 | | | RES,FXD,FILM:250K OHM,1%,0.125W,TC=T0 | 80009 | 321-0618-00 |
| A1R324 | 315-0100-00 | | | RES,FXD,FILM:10 OHM,5%,0.25W | 19701 | 5043CX10RR00J |
| A1R325 | 322-3172-00 | | | RES,FXD,FILM:604 OHM,1%,0.2W,TC=T0 | 57668 | CRB20 FXE 604E |
| A1R326 | 322-3199-00 | | | RES,FXD,FILM:1.15K OHM,1%,0.2W,TC=T0 | 80009 | 322-3199-00 |
| A1R327 | 322-3197-00 | | | RES,FXD,FILM:1.1K OHM,1%,0.2W,TC=T0 | 80009 | 322-3197-00 |
| A1R328 | 315-0131-00 | | | RES,FXD,FILM:130 OHM,5%,0.25W | 80009 | 315-0131-00 |

| Component No. | Tektronix Part No. | Serial/Assembly No. Effective | Dscont | Name & Description | Mfr. Code | Mfr. Part No. |
|---|---|---|---|---|---|---|
| A1R330 | 322-3289-00 | | | RES,FXD:METAL FILM;10K OHM,1%,0.2W,TC=100 PPM;AXIAL,T&R,SMALL BODY | 80009 | 322-3289-00 |
| A1R331 | 315-0103-00 | | | RES,FXD,FILM:10K OHM,5%,0.25W | 80009 | 315-0103-00 |
| A1R332 | 315-0100-00 | | | RES,FXD,FILM:10 OHM,5%,0.25W | 19701 | 5043CX10RR00J |
| A1R333 | 315-0104-00 | | | RES,FXD,FILM:100K OHM,5%,0.25W | 80009 | 315-0104-00 |
| A1R334 | 322-3085-00 | | | RES,FXD:METAL FILM;75 OHM,1%,0.2W,TC=100 PPM;AXIAL,T&R,SMALL BODY | 57668 | CRB20 FXE 75E0 |
| A1R335 | 315-0203-00 | | | RES,FXD,FILM:20K OHM,5%,0.25W | 80009 | 315-0203-00 |
| A1R336 | 315-0201-00 | | | RES,FXD,FILM:200 OHM,5%,0.25W | 80009 | 315-0201-00 |
| A1R337 | 315-0152-00 | | | RES,FXD,FILM:1.5K OHM,5%,0.25W | 80009 | 315-0152-00 |
| A1R338 | 315-0152-00 | | | RES,FXD,FILM:1.5K OHM,5%,0.25W | 80009 | 315-0152-00 |
| A1R339 | 311-2230-00 | 671-0535-05 | 671-0535-06 | RES,VAR,TRMR:CERMET;500 OHM,20%,0.5W,0.197 SQ,TOP ADJUST;T&R | TK1450 | GF06UT 500 |
| A1R340 | 315-0201-00 | | | RES,FXD,FILM:200 OHM,5%,0.25W | 80009 | 315-0201-00 |
| A1R341 | 322-3265-00 | 671-0535-05 | 671-0535-06 | RES,FXD:METAL FILM;5.62K OHM,1%,0.2W,TC=100 PPM;AXIAL,T&R,SMALL BODY | 80009 | 322-3265-00 |
| A1R341 | 321-1617-06 | 671-0535-07 | | RES,FXD,FILM:5.85K OHM,0.25%,0.125W,TC=T9 | 07716 | CEAE58500C |
| A1R342 | 321-0281-07 | | | RES,FXD:METAL FILM;8.25K OHM,0.1%,0.125W,TC=25 PPM;AXIAL | 07716 | CEAE82500B |
| A1R343 | 315-0103-00 | | | RES,FXD,FILM:10K OHM,5%,0.25W | 80009 | 315-0103-00 |
| A1R344 | 315-0102-00 | | | RES,FXD,FILM:1K OHM,5%,0.25W | 80009 | 315-0102-00 |
| A1R345 | 315-0241-00 | | | RES,FXD,FILM:240 OHM,5%,0.25W | 80009 | 315-0241-00 |
| A1R346 | 321-0319-00 | | | RES,FXD,FILM:20.5K OHM,1%,0.125W,TC=T0 | 80009 | 321-0319-00 |
| A1R347 | 315-0150-00 | | | RES,FXD,FILM:15 OHM,5%,0.25W | 80009 | 315-0150-00 |
| A1R348 | 315-0222-00 | | | RES,FXD,FILM:2.2K OHM,5%,0.25W | 80009 | 315-0222-00 |
| A1R349 | 315-0222-00 | | | RES,FXD,FILM:2.2K OHM,5%,0.25W | 80009 | 315-0222-00 |
| A1R350 | 315-0103-00 | | | RES,FXD,FILM:10K OHM,5%,0.25W | 80009 | 315-0103-00 |
| A1R351 | 315-0102-00 | | | RES,FXD,FILM:1K OHM,5%,0.25W | 80009 | 315-0102-00 |
| A1R352 | 315-0150-00 | | | RES,FXD,FILM:15 OHM,5%,0.25W | 80009 | 315-0150-00 |
| A1R353 | 315-0102-00 | | | RES,FXD,FILM:1K OHM,5%,0.25W | 80009 | 315-0102-00 |
| A1R354 | 322-3282-00 | | | RES,FXD,FILM:8.45K OHM,1%,0.2W,TC=T0 | 80009 | 322-3282-00 |
| A1R355 | 322-3213-00 | | | RES,FXD,FILM:1.62K OHM,1%,0.2W,TC=T0 | 57668 | CRB20 FXE 1K62 |
| A1R356 | 315-0241-00 | | | RES,FXD,FILM:240 OHM,5%,0.25W | 80009 | 315-0241-00 |
| A1R357 | 321-0319-00 | | | RES,FXD,FILM:20.5K OHM,1%,0.125W,TC=T0 | 80009 | 321-0319-00 |
| A1R360 | 308-0750-00 | | | RES,FXD,WW:1K OHM,0.01%,0.125W,TC=5PPM | 54294 | VA14C1-10000T |
| A1R362 | 308-0747-00 | | | RES,FXD,WW:9K OHM,0.01%,0.125W,TC=5PPM | 54294 | VA14C1-90000T |
| A1R364 | 322-3289-00 | | | RES,FXD:METAL FILM;10K OHM,1%,0.2W,TC=100 PPM;AXIAL,T&R,SMALL BODY | 80009 | 322-3289-00 |
| A1R365 | 322-3289-00 | | | RES,FXD:METAL FILM;10K OHM,1%,0.2W,TC=100 PPM;AXIAL,T&R,SMALL BODY | 80009 | 322-3289-00 |
| A1R366 | 322-3289-00 | | | RES,FXD:METAL FILM;10K OHM,1%,0.2W,TC=100 PPM;AXIAL,T&R,SMALL BODY | 80009 | 322-3289-00 |
| A1R367 | 322-0173-07 | | | RES,FXD,FILM:619 OHM,0.1%,0.125W | 80009 | 322-0173-07 |
| A1R368 | 321-0641-07 | | | RES,FXD,FILM:1.8K OHM,0.1,0.125W,TC=T9 | 07716 | CEAE 18000B |
| A1R410 | 315-0101-00 | | | RES,FXD,FILM:100 OHM,5%,0.25W | 80009 | 315-0101-00 |
| A1R412 | 322-3085-00 | | | RES,FXD:METAL FILM;75 OHM,1%,0.2W,TC=100 PPM;AXIAL,T&R,SMALL BODY | 57668 | CRB20 FXE 75E0 |
| A1R415 | 315-0222-00 | | | RES,FXD,FILM:2.2K OHM,5%,0.25W | 80009 | 315-0222-00 |
| A1R416 | 315-0222-00 | | | RES,FXD,FILM:2.2K OHM,5%,0.25W | 80009 | 315-0222-00 |
| A1R418 | 315-0203-00 | | | RES,FXD,FILM:20K OHM,5%,0.25W | 80009 | 315-0203-00 |
| A1R420 | 315-0222-00 | | | RES,FXD,FILM:2.2K OHM,5%,0.25W | 80009 | 315-0222-00 |
| A1R421 | 315-0222-00 | | | RES,FXD,FILM:2.2K OHM,5%,0.25W | 80009 | 315-0222-00 |
| A1R422 | 315-0222-00 | | | RES,FXD,FILM:2.2K OHM,5%,0.25W | 80009 | 315-0222-00 |
| A1R423 | 315-0222-00 | | | RES,FXD,FILM:2.2K OHM,5%,0.25W | 80009 | 315-0222-00 |
| A1R424 | 315-0205-00 | | | RES,FXD,FILM:2M OHM,5%,0.25W | 80009 | 315-0205-00 |
| A1R431 | 315-0103-00 | | | RES,FXD,FILM:10K OHM,5%,0.25W | 80009 | 315-0103-00 |
| A1R432 | 315-0362-00 | | | RES,FXD,FILM:3.6K OHM,5%,0.25W | 80009 | 315-0362-00 |
| A1R436 | 315-0100-00 | | | RES,FXD,FILM:10 OHM,5%,0.25W | 19701 | 5043CX10RR00J |

| Component No. | Tektronix Part No. | Serial/Assembly No. Effective | Dscont | Name & Description | Mfr. Code | Mfr. Part No. |
|---|---|---|---|---|---|---|
| A1R440 | 322-3265-00 | 671-0535-05 | 671-0535-06 | RES,FXD:METAL FILM;5.62K OHM,1%,0.2W,TC=100 PPM;AXIAL,T&R,SMALL BODY | 80009 | 322-3265-00 |
| A1R440 | 321-1617-06 | 671-0535-07 | | RES,FXD,FILM:5.85K OHM,0.25%,0.125W,TC=T9 | 07716 | CEAE58500C |
| A1R441 | 321-0281-07 | | | RES,FXD:METAL FILM;8.25K OHM,0.1%,0.125W,TC=25 PPM;AXIAL | 07716 | CEAE82500B |
| A1R442 | 315-0104-00 | | | RES,FXD,FILM:100K OHM,5%,0.25W | 80009 | 315-0104-00 |
| A1R443 | 315-0201-00 | | | RES,FXD,FILM:200 OHM,5%,0.25W | 80009 | 315-0201-00 |
| A1R444 | 315-0201-00 | | | RES,FXD,FILM:200 OHM,5%,0.25W | 80009 | 315-0201-00 |
| A1R445 | 311-2230-00 | 671-0535-05 | 671-0535-06 | RES,VAR,TRMR:CERMET;500 OHM,20%,0.5W,0.197 SQ,TOP ADJUST;T&R | TK1450 | GF06UT 500 |
| A1R449 | 322-3318-00 | | | RES,FXD:METAL FILM;20K OHM,1%,0.2W,TC=100 PPM;AXIAL,T&R,SMALL BODY | 57668 | CRB20 FXE 20K0 |
| A1R450 | 315-0100-00 | | | RES,FXD,FILM:10 OHM,5%,0.25W | 19701 | 5043CX10RR00J |
| A1R451 | 322-3085-00 | | | RES,FXD:METAL FILM;75 OHM,1%,0.2W,TC=100 PPM;AXIAL,T&R,SMALL BODY | 57668 | CRB20 FXE 75E0 |
| A1R452 | 322-3085-00 | | | RES,FXD:METAL FILM;75 OHM,1%,0.2W,TC=100 PPM;AXIAL,T&R,SMALL BODY | 57668 | CRB20 FXE 75E0 |
| A1R453 | 322-3318-00 | | | RES,FXD:METAL FILM;20K OHM,1%,0.2W,TC=100 PPM;AXIAL,T&R,SMALL BODY | 57668 | CRB20 FXE 20K0 |
| A1R454 | 315-0100-00 | | | RES,FXD,FILM:10 OHM,5%,0.25W | 19701 | 5043CX10RR00J |
| A1R455 | 322-3175-00 | | | RES,FXD,FILM:649 OHM,1%,0.2W,TC=T0 | 80009 | 322-3175-00 |
| A1R456 | 322-3222-00 | | | RES,FXD:METAL FILM;2K OHM,1%,0.2W,TC=100 PPM;AXIAL,T&R,SMALL BODY | 57668 | CRB20 FXE 2K00 |
| A1R472 | 315-0203-00 | | | RES,FXD,FILM:20K OHM,5%,0.25W | 80009 | 315-0203-00 |
| A1R474 | 311-0605-00 | | | RES,VAR,NONWW:TRMR,200 OHM,0.5W | 80009 | 311-0605-00 |
| A1R476 | 311-0605-00 | | | RES,VAR,NONWW:TRMR,200 OHM,0.5W | 80009 | 311-0605-00 |
| A1R514 | 315-0101-00 | | | RES,FXD,FILM:100 OHM,5%,0.25W | 80009 | 315-0101-00 |
| A1R515 | 322-3085-00 | | | RES,FXD:METAL FILM;75 OHM,1%,0.2W,TC=100 PPM;AXIAL,T&R,SMALL BODY | 57668 | CRB20 FXE 75E0 |
| A1R516 | 311-0622-00 | | | RES,VAR,NONWW:TRMR,100 OHM,0.5W | 80009 | 311-0622-00 |
| A1R520 | 315-0222-00 | | | RES,FXD,FILM:2.2K OHM,5%,0.25W | 80009 | 315-0222-00 |
| A1R521 | 315-0222-00 | | | RES,FXD,FILM:2.2K OHM,5%,0.25W | 80009 | 315-0222-00 |
| A1R522 | 322-3199-00 | | | RES,FXD,FILM:1.15K OHM,1%,0.2W,TC=T0 | 80009 | 322-3199-00 |
| A1R523 | 322-3197-00 | | | RES,FXD,FILM:1.1K OHM,1%,0.2W,TC=T0 | 80009 | 322-3197-00 |
| A1R524 | 315-0131-00 | | | RES,FXD,FILM:130 OHM,5%,0.25W | 80009 | 315-0131-00 |
| A1R531 | 322-3085-00 | | | RES,FXD:METAL FILM;75 OHM,1%,0.2W,TC=100 PPM;AXIAL,T&R,SMALL BODY | 57668 | CRB20 FXE 75E0 |
| A1R532 | 315-0203-00 | | | RES,FXD,FILM:20K OHM,5%,0.25W | 80009 | 315-0203-00 |
| A1R533 | 315-0100-00 | | | RES,FXD,FILM:10 OHM,5%,0.25W | 19701 | 5043CX10RR00J |
| A1R534 | 315-0205-00 | | | RES,FXD,FILM:2M OHM,5%,0.25W | 80009 | 315-0205-00 |
| A1R544 | 315-0222-00 | | | RES,FXD,FILM:2.2K OHM,5%,0.25W | 80009 | 315-0222-00 |
| A1R554 | 315-0511-00 | | | RES,FXD,FILM:510 OHM,5%,0.25W | 80009 | 315-0511-00 |
| A1R555 | 311-1757-00 | | | RES,VAR,NONWW:2.5K OHM 10%,.5W LIN,CERMET | 80009 | 311-1757-00 |
| A1R556 | 311-0978-00 | | | RES,VAR,NONWW:TRMR,250 OHM,0.5W | 80009 | 311-0978-00 |
| A1R557 | 322-3344-00 | | | RES,FXD,FILM:37.4K OHM,1%,0.2W,TC=T0 | 80009 | 322-3344-00 |
| A1R610 | 322-3172-00 | | | RES,FXD,FILM:604 OHM,1%,0.2W,TC=T0 | 57668 | CRB20 FXE 604E |
| A1R611 | 322-3289-00 | | | RES,FXD:METAL FILM;10K OHM,1%,0.2W,TC=100 PPM;AXIAL,T&R,SMALL BODY | 80009 | 322-3289-00 |
| A1R612 | 322-3289-00 | | | RES,FXD:METAL FILM;10K OHM,1%,0.2W,TC=100 PPM;AXIAL,T&R,SMALL BODY | 80009 | 322-3289-00 |
| A1R614 | 315-0103-00 | | | RES,FXD,FILM:10K OHM,5%,0.25W | 80009 | 315-0103-00 |
| A1R615 | 315-0103-00 | | | RES,FXD,FILM:10K OHM,5%,0.25W | 80009 | 315-0103-00 |
| A1R616 | 322-3289-00 | | | RES,FXD:METAL FILM;10K OHM,1%,0.2W,TC=100 PPM;AXIAL,T&R,SMALL BODY | 80009 | 322-3289-00 |
| A1R617 | 322-3289-00 | | | RES,FXD:METAL FILM;10K OHM,1%,0.2W,TC=100 PPM;AXIAL,T&R,SMALL BODY | 80009 | 322-3289-00 |
| A1R618 | 315-0222-00 | | | RES,FXD,FILM:2.2K OHM,5%,0.25W | 80009 | 315-0222-00 |
| A1R620 | 322-3293-00 | | | RES,FXD:METAL FILM;11K OHM,1%,0.2W,TC=100 PPM;AXIAL,T&R,SMALL BODY | 80009 | 322-3293-00 |

| Component No. | Tektronix Part No. | Serial/Assembly No. Effective | Dscont | Name & Description | Mfr. Code | Mfr. Part No. |
|---|---|---|---|---|---|---|
| A1R621 | 321-1731-00 | | | RES,FXD,FILM:500K OHM,1%,0.125W,TC=T0 | 80009 | 321-1731-00 |
| A1R622 | 321-0618-00 | | | RES,FXD,FILM:250K OHM,1%,0.125W,TC=T0 | 80009 | 321-0618-00 |
| A1R623 | 315-0100-00 | | | RES,FXD,FILM:10 OHM,5%,0.25W | 19701 | 5043CX10RR00J |
| A1R628 | 315-0205-00 | | | RES,FXD,FILM:2M OHM,5%,0.25W | 80009 | 315-0205-00 |
| A1R630 | 315-0104-00 | | | RES,FXD,FILM:100K OHM,5%,0.25W | 80009 | 315-0104-00 |
| A1R631 | 315-0152-00 | | | RES,FXD,FILM:1.5K OHM,5%,0.25W | 80009 | 315-0152-00 |
| A1R632 | 315-0100-00 | | | RES,FXD,FILM:10 OHM,5%,0.25W | 19701 | 5043CX10RR00J |
| A1R633 | 315-0303-00 | | | RES,FXD,FILM:30K OHM,5%,0.25W | 80009 | 315-0303-00 |
| A1R634 | 315-0152-00 | | | RES,FXD,FILM:1.5K OHM,5%,0.25W | 80009 | 315-0152-00 |
| A1R635 | 315-0103-00 | | | RES,FXD,FILM:10K OHM,5%,0.25W | 80009 | 315-0103-00 |
| A1R636 | 315-0362-00 | | | RES,FXD,FILM:3.6K OHM,5%,0.25W | 80009 | 315-0362-00 |
| A1R637 | 315-0100-00 | | | RES,FXD,FILM:10 OHM,5%,0.25W | 19701 | 5043CX10RR00J |
| A1R640 | 321-0281-07 | | | RES,FXD:METAL FILM;8.25K OHM,0.1%,0.125W,TC =25 PPM;AXIAL | 07716 | CEAE82500B |
| A1R641 | 315-0222-00 | | | RES,FXD,FILM:2.2K OHM,5%,0.25W | 80009 | 315-0222-00 |
| A1R642 | 315-0102-00 | | | RES,FXD,FILM:1K OHM,5%,0.25W | 80009 | 315-0102-00 |
| A1R643 | 315-0100-00 | | | RES,FXD,FILM:10 OHM,5%,0.25W | 19701 | 5043CX10RR00J |
| A1R644 | 315-0201-00 | | | RES,FXD,FILM:200 OHM,5%,0.25W | 80009 | 315-0201-00 |
| A1R645 | 322-3265-00 | 671-0535-05 | 671-0535-06 | RES,FXD:METAL FILM;5.62K OHM,1%,0.2W,TC=100 PPM;AXIAL,T&R,SMALL BODY | 80009 | 322-3265-00 |
| A1R645 | 321-1617-06 | 671-0535-07 | | RES,FXD,FILM:5.85K OHM,0.25%,0.125W,TC=T9 | 07716 | CEAE58500C |
| A1R646 | 315-0222-00 | | | RES,FXD,FILM:2.2K OHM,5%,0.25W | 80009 | 315-0222-00 |
| A1R647 | 321-0961-07 | | | RES,FXD,FILM:500.5 OHM,0.1%,0.125W,TC=T9 | 80009 | 321-0961-07 |
| A1R648 | 321-0961-07 | | | RES,FXD,FILM:500.5 OHM,0.1%,0.125W,TC=T9 | 80009 | 321-0961-07 |
| A1R649 | 315-0103-00 | | | RES,FXD,FILM:10K OHM,5%,0.25W | 80009 | 315-0103-00 |
| A1R650 | 322-3110-00 | | | RES,FXD,FILM:137 OHM,1%,0.2W,TC=T0 | 91637 | CCF50-2G137R0F |
| A1R651 | 322-3162-00 | | | RES,FXD:METAL FILM;475 OHM,1%,0.2W,TC=100 PPM;AXIAL,T&R,SMALL BODY | 80009 | 322-3162-00 |
| A1R652 | 315-0470-00 | | | RES,FXD,FILM:47 OHM,5%,0.25W | 80009 | 315-0470-00 |
| A1R653 | 315-0470-00 | | | RES,FXD,FILM:47 OHM,5%,0.25W | 80009 | 315-0470-00 |
| A1R654 | 322-3162-00 | | | RES,FXD:METAL FILM;475 OHM,1%,0.2W,TC=100 PPM;AXIAL,T&R,SMALL BODY | 80009 | 322-3162-00 |
| A1R655 | 322-3110-00 | | | RES,FXD,FILM:137 OHM,1%,0.2W,TC=T0 | 91637 | CCF50-2G137R0F |
| A1R656 | 315-0222-00 | | | RES,FXD,FILM:2.2K OHM,5%,0.25W | 80009 | 315-0222-00 |
| A1R657 | 315-0201-00 | | | RES,FXD,FILM:200 OHM,5%,0.25W | 80009 | 315-0201-00 |
| A1R658 | 315-0201-00 | | | RES,FXD,FILM:200 OHM,5%,0.25W | 80009 | 315-0201-00 |
| A1R666 | 321-0816-00 | | | RES,FXD,FILM:5K OHM,1%,0.125W,TC=T0 | 07716 | |
| A1R667 | 321-0816-00 | | | RES,FXD,FILM:5K OHM,1%,0.125W,TC=T0 | 07716 | |
| A1R697 | 308-0240-00 | | | RES,FXD,WW:2 OHM,5%,3W | 07088 | |
| A1R698 | 308-0240-00 | | | RES,FXD,WW:2 OHM,5%,3W | 07088 | |
| A1R711 | 315-0203-00 | | | RES,FXD,FILM:20K OHM,5%,0.25W | 80009 | 315-0203-00 |
| A1R712 | 315-0101-00 | | | RES,FXD,FILM:100 OHM,5%,0.25W | 80009 | 315-0101-00 |
| A1R718 | 321-1731-00 | | | RES,FXD,FILM:500K OHM,1%,0.125W,TC=T0 | 80009 | 321-1731-00 |
| A1R722 | 315-0222-00 | | | RES,FXD,FILM:2.2K OHM,5%,0.25W | 80009 | 315-0222-00 |
| A1R723 | 315-0222-00 | | | RES,FXD,FILM:2.2K OHM,5%,0.25W | 80009 | 315-0222-00 |
| A1R724 | 311-0622-00 | | | RES,VAR,NONWW:TRMR,100 OHM,0.5W | 80009 | 311-0622-00 |
| A1R725 | 322-3199-00 | | | RES,FXD,FILM:1.15K OHM,1%,0.2W,TC=T0 | 80009 | 322-3199-00 |
| A1R726 | 322-3197-00 | | | RES,FXD,FILM:1.1K OHM,1%,0.2W,TC=T0 | 80009 | 322-3197-00 |
| A1R727 | 315-0131-00 | | | RES,FXD,FILM:130 OHM,5%,0.25W | 80009 | 315-0131-00 |
| A1R734 | 322-3085-00 | | | RES,FXD:METAL FILM;75 OHM,1%,0.2W,TC=100 PPM;AXIAL,T&R,SMALL BODY | 57668 | CRB20 FXE 75E0 |
| A1R735 | 315-0203-00 | | | RES,FXD,FILM:20K OHM,5%,0.25W | 80009 | 315-0203-00 |
| A1R738 | 315-0205-00 | | | RES,FXD,FILM:2M OHM,5%,0.25W | 80009 | 315-0205-00 |
| A1R740 | 315-0222-00 | | | RES,FXD,FILM:2.2K OHM,5%,0.25W | 80009 | 315-0222-00 |
| A1R741 | 321-0961-07 | | | RES,FXD,FILM:500.5 OHM,0.1%,0.125W,TC=T9 | 80009 | 321-0961-07 |
| A1R742 | 321-0961-07 | | | RES,FXD,FILM:500.5 OHM,0.1%,0.125W,TC=T9 | 80009 | 321-0961-07 |
| A1R743 | 315-0201-00 | | | RES,FXD,FILM:200 OHM,5%,0.25W | 80009 | 315-0201-00 |
| A1R744 | 315-0104-00 | | | RES,FXD,FILM:100K OHM,5%,0.25W | 80009 | 315-0104-00 |
| A1R745 | 315-0203-00 | | | RES,FXD,FILM:20K OHM,5%,0.25W | 80009 | 315-0203-00 |

| Component No. | Tektronix Part No. | Serial/Assembly No. Effective | Dscont | Name & Description | Mfr. Code | Mfr. Part No. |
|---|---|---|---|---|---|---|
| A1R746 | 321-0085-07 | | | RES,FXD,FILM:75 OHM,0.1%,0.125W,TC=T9 | 80009 | 321-0085-07 |
| A1R747 | 321-0085-07 | | | RES,FXD,FILM:75 OHM,0.1%,0.125W,TC=T9 | 80009 | 321-0085-07 |
| A1R748 | 311-2230-00 | 671-0535-05 | 671-0535-06 | RES,VAR,TRMR:CERMET;500 OHM,20%,0.5W,0.197 SQ,TOP ADJUST;T&R | TK1450 | GF06UT 500 |
| A1R750 | 321-0097-07 | | | RES,FXD,FILM:100 OHM,0.1%,0.125W,TC=T9 | 80009 | 321-0097-07 |
| A1R751 | 321-0097-07 | | | RES,FXD,FILM:100 OHM,0.1%,0.125W,TC=T9 | 80009 | 321-0097-07 |
| A1R754 | 315-0470-00 | | | RES,FXD,FILM:47 OHM,5%,0.25W | 80009 | 315-0470-00 |
| A1R755 | 315-0101-00 | | | RES,FXD,FILM:100 OHM,5%,0.25W | 80009 | 315-0101-00 |
| A1R756 | 315-0101-00 | | | RES,FXD,FILM:100 OHM,5%,0.25W | 80009 | 315-0101-00 |
| A1R757 | 315-0222-00 | | | RES,FXD,FILM:2.2K OHM,5%,0.25W | 80009 | 315-0222-00 |
| A1R758 | 322-3132-00 | | | RES,FXD,FILM:232 OHM,1%,0.2W,TC=T0 | 80009 | 322-3132-00 |
| A1R759 | 311-0978-00 | | | RES,VAR,NONWW:TRMR,250 OHM,0.5W | 80009 | 311-0978-00 |
| A1R760 | 321-0816-00 | | | RES,FXD,FILM:5K OHM,1%,0.125W,TC=T0 | 07716 | |
| A1R761 | 321-0816-00 | | | RES,FXD,FILM:5K OHM,1%,0.125W,TC=T0 | 07716 | |
| A1R762 | 321-0639-00 | | | RES,FXD,FILM:9.6K OHM,1%,0.125W,TC=T0 | 80009 | 321-0639-00 |
| A1R763 | 311-0633-00 | | | RES,VAR,NONWW:TRMR,5K OHM,0.5W | 32997 | 3329H-L58-502 |
| A1R764 | 311-0633-00 | | | RES,VAR,NONWW:TRMR,5K OHM,0.5W | 32997 | 3329H-L58-502 |
| A1R765 | 322-3202-00 | | | RES,FXD,FILM:1.24K OHM,1%,0.2W,TC=T0 | 80009 | 322-3202-00 |
| A1R766 | 322-3233-00 | | | RES,FXD,FILM:2.61K OHM,1%,0.2W,TC=T0 | 80009 | 322-3233-00 |
| A1R767 | 322-3262-00 | | | RES,FXD,FILM:5.23K OHM,1%,0.2W,TC=T0 | 80009 | 322-3262-00 |
| A1R794 | 315-0102-00 | | | RES,FXD,FILM:1K OHM,5%,0.25W | 80009 | 315-0102-00 |
| A1R796 | 307-0104-00 | | | RES,FXD,CMPSN:3.3 OHM,5%,0.25W | 80009 | 307-0104-00 |
| A1R811 | 315-0222-00 | | | RES,FXD,FILM:2.2K OHM,5%,0.25W | 80009 | 315-0222-00 |
| A1R812 | 315-0222-00 | | | RES,FXD,FILM:2.2K OHM,5%,0.25W | 80009 | 315-0222-00 |
| A1R813 | 322-3085-00 | | | RES,FXD:METAL FILM;75 OHM,1%,0.2W,TC=100 PPM;AXIAL,T&R,SMALL BODY | 57668 | CRB20 FXE 75E0 |
| A1R820 | 322-3172-00 | | | RES,FXD,FILM:604 OHM,1%,0.2W,TC=T0 | 57668 | CRB20 FXE 604E |
| A1R821 | 322-3293-00 | | | RES,FXD:METAL FILM;11K OHM,1%,0.2W,TC=100 PPM;AXIAL,T&R,SMALL BODY | 80009 | 322-3293-00 |
| A1R822 | 321-0618-00 | | | RES,FXD,FILM:250K OHM,1%,0.125W,TC=T0 | 80009 | 321-0618-00 |
| A1R823 | 315-0100-00 | | | RES,FXD,FILM:10 OHM,5%,0.25W | 19701 | 5043CX10RR00J |
| A1R827 | 315-0432-00 | | | RES,FXD,FILM:4.3K OHM,5%,0.25W | 80009 | 315-0432-00 |
| A1R830 | 315-0104-00 | | | RES,FXD,FILM:100K OHM,5%,0.25W | 80009 | 315-0104-00 |
| A1R831 | 315-0152-00 | | | RES,FXD,FILM:1.5K OHM,5%,0.25W | 80009 | 315-0152-00 |
| A1R832 | 315-0100-00 | | | RES,FXD,FILM:10 OHM,5%,0.25W | 19701 | 5043CX10RR00J |
| A1R833 | 315-0303-00 | | | RES,FXD,FILM:30K OHM,5%,0.25W | 80009 | 315-0303-00 |
| A1R834 | 315-0152-00 | | | RES,FXD,FILM:1.5K OHM,5%,0.25W | 80009 | 315-0152-00 |
| A1R835 | 322-3177-00 | | | RES,FXD:METAL FILM;681 OHM,1%,0.2W,TC=100 PPM;AXIAL,T&R,SMALL BODY | 91637 | CCF50-2G681R0F |
| A1R836 | 322-3213-00 | | | RES,FXD,FILM:1.62K OHM,1%,0.2W,TC=T0 | 57668 | CRB20 FXE 1K62 |
| A1R837 | 322-3213-00 | | | RES,FXD,FILM:1.62K OHM,1%,0.2W,TC=T0 | 57668 | CRB20 FXE 1K62 |
| A1R842 | 321-0609-07 | | | RES,FXD,FILM:480 OHM,0.1%,0.125W,TC=T9 | 80009 | 321-0609-07 |
| A1R843 | 321-0609-07 | | | RES,FXD,FILM:480 OHM,0.1%,0.125W,TC=T9 | 80009 | 321-0609-07 |
| A1R844 | 315-0330-00 | | | RES,FXD,FILM:33 OHM,5%,0.25W | 80009 | 315-0330-00 |
| A1R846 | 315-0100-00 | | | RES,FXD,FILM:10 OHM,5%,0.25W | 19701 | 5043CX10RR00J |
| A1R850 | 311-0634-00 | | | RES,VAR,NONWW:TRMR,500 OHM,0.5W | 80009 | 311-0634-00 |
| A1R851 | 315-0332-00 | | | RES,FXD,FILM:3.3K OHM,5%,0.25W | 80009 | 315-0332-00 |
| A1R852 | 131-0566-00 | | | BUS,CONDUCTOR:DUMMY RES,0.094 OD X 0.225 L | 80009 | 131-0566-00 |
| A1R853 | 131-0566-00 | | | BUS,CONDUCTOR:DUMMY RES,0.094 OD X 0.225 L | 80009 | 131-0566-00 |
| A1R854 | 315-0332-00 | | | RES,FXD,FILM:3.3K OHM,5%,0.25W | 80009 | 315-0332-00 |
| A1R855 | 321-0771-01 | | | RES,FXD,FILM:50 OHM,0.5%,0.125W,TC=T0 | 80009 | 321-0771-01 |
| A1R856 | 323-0128-00 | | | RES,FXD,FILM:210 OHM,1%,0.5W,TC=T0 | 75042 | CECT0-2100F |
| A1R857 | 322-3256-00 | | | RES,FXD,FILM:4.53K OHM,1%,0.2W,TC=T0 | 80009 | 322-3256-00 |
| A1R862 | 321-0124-00 | | | RES,FXD,FILM:191 OHM,1%,0.125W, TC=T0 | 07716 | CEAD191R0F |
| A1R876 | 315-0101-00 | | | RES,FXD,FILM:100 OHM,5%,0.25W | 80009 | 315-0101-00 |
| A1R877 | 315-0101-00 | | | RES,FXD,FILM:100 OHM,5%,0.25W | 80009 | 315-0101-00 |
| A1R880 | 315-0102-00 | | | RES,FXD,FILM:1K OHM,5%,0.25W | 80009 | 315-0102-00 |
| A1R884 | 307-0104-00 | | | RES,FXD,CMPSN:3.3 OHM,5%,0.25W | 80009 | 307-0104-00 |
| A1R890 | 321-0319-00 | | | RES,FXD,FILM:20.5K OHM,1%,0.125W,TC=T0 | 80009 | 321-0319-00 |

| Component No. | Tektronix Part No. | Serial/Assembly No. Effective | Dscont | Name & Description | Mfr. Code | Mfr. Part No. |
|---|---|---|---|---|---|---|
| A1R891 | 321-0319-00 | | | RES,FXD,FILM:20.5K OHM,1%,0.125W,TC=T0 | 80009 | 321-0319-00 |
| A1R892 | 315-0103-00 | | | RES,FXD,FILM:10K OHM,5%,0.25W | 80009 | 315-0103-00 |
| A1R924 | 322-3092-00 | | | RES,FXD,FILM:88.7 OHM,1%,0.2W,TC=T0 | 80009 | 322-3092-00 |
| A1R925 | 311-0633-00 | | | RES,VAR,NONWW:TRMR,5K OHM,0.5W | 32997 | 3329H-L58-502 |
| A1R930 | 315-0133-00 | | | RES,FXD,FILM:13K OHM,5%,0.25W | 80009 | 315-0133-00 |
| A1R931 | 322-3162-00 | | | RES,FXD:METAL FILM;475 OHM,1%,0.2W,TC=100 PPM;AXIAL,T&R,SMALL BODY | 80009 | 322-3162-00 |
| A1R932 | 322-3289-00 | | | RES,FXD:METAL FILM;10K OHM,1%,0.2W,TC=100 PPM;AXIAL,T&R,SMALL BODY | 80009 | 322-3289-00 |
| A1R933 | 321-0961-07 | | | RES,FXD,FILM:500.5 OHM,0.1%,0.125W,TC=T9 | 80009 | 321-0961-07 |
| A1R934 | 315-0203-00 | | | RES,FXD,FILM:20K OHM,5%,0.25W | 80009 | 315-0203-00 |
| A1R935 | 315-0151-00 | 671-0535-05 | 671-0535-06 | RES,FXD,FILM:150 OHM,5%,0.25W | 80009 | 315-0151-00 |
| A1R936 | 321-0735-07 | | | RES,FXD,FILM:1.001K OHM,0.1%,0.125W,TC=T9 | 80009 | 321-0735-07 |
| A1R937 | 322-3085-00 | | | RES,FXD:METAL FILM;75 OHM,1%,0.2W,TC=100 PPM;AXIAL,T&R,SMALL BODY | 57668 | CRB20 FXE 75E0 |
| A1R938 | 321-0754-07 | | | RES,FXD,FILM:900 OHM,0.1%,0.125W,TC=T9 | 2M627 | |
| A1R939 | 321-0145-01 | | | RES,FXD,FILM:316 OHM,0.5%,0.125W,TC=T0 | 80009 | 321-0145-01 |
| A1R941 | 315-0203-00 | | | RES,FXD,FILM:20K OHM,5%,0.25W | 80009 | 315-0203-00 |
| A1R943 | 315-0222-00 | | | RES,FXD,FILM:2.2K OHM,5%,0.25W | 80009 | 315-0222-00 |
| A1R944 | 315-0100-00 | | | RES,FXD,FILM:10 OHM,5%,0.25W | 19701 | 5043CX10RR00J |
| A1R946 | 315-0221-00 | | | RES,FXD,FILM:220 OHM,5%,0.25W | 80009 | 315-0221-00 |
| A1R955 | 321-0663-00 | | | RES,FXD,FILM:1.07K OHM,0.5%,0.125W,TC=T2 | 80009 | 321-0663-00 |
| A1R976 | 301-0101-00 | | | RES,FXD,FILM:100 OHM,5%,0.5W | 01121 | EB1015 |
| A1R977 | 301-0101-00 | | | RES,FXD,FILM:100 OHM,5%,0.5W | 01121 | EB1015 |
| A1TP220 | 214-4085-00 | | | TERM,TEST POINT:0.070 ID,0.220 H,0.063 DIA PCB,0.015 X 0.032 BRASS,W/ RED NYLON COLLAR | 26364 | 104-01-02 |
| A1TP250 | 214-4085-00 | | | TERM,TEST POINT:0.070 ID,0.220 H,0.063 DIA PCB,0.015 X 0.032 BRASS,W/ RED NYLON COLLAR | 26364 | 104-01-02 |
| A1TP252 | 214-4085-00 | | | TERM,TEST POINT:0.070 ID,0.220 H,0.063 DIA PCB,0.015 X 0.032 BRASS,W/ RED NYLON COLLAR | 26364 | 104-01-02 |
| A1TP254 | 214-4085-00 | | | TERM,TEST POINT:0.070 ID,0.220 H,0.063 DIA PCB,0.015 X 0.032 BRASS,W/ RED NYLON COLLAR | 26364 | 104-01-02 |
| A1TP256 | 214-4085-00 | | | TERM,TEST POINT:0.070 ID,0.220 H,0.063 DIA PCB,0.015 X 0.032 BRASS,W/ RED NYLON COLLAR | 26364 | 104-01-02 |
| A1TP339 | 214-4085-00 | | | TERM,TEST POINT:0.070 ID,0.220 H,0.063 DIA PCB,0.015 X 0.032 BRASS,W/ RED NYLON COLLAR | 26364 | 104-01-02 |
| A1TP360 | 214-4085-00 | | | TERM,TEST POINT:0.070 ID,0.220 H,0.063 DIA PCB,0.015 X 0.032 BRASS,W/ RED NYLON COLLAR | 26364 | 104-01-02 |
| A1TP362 | 214-4085-00 | | | TERM,TEST POINT:0.070 ID,0.220 H,0.063 DIA PCB,0.015 X 0.032 BRASS,W/ RED NYLON COLLAR | 26364 | 104-01-02 |
| A1TP450 | 214-4085-00 | | | TERM,TEST POINT:0.070 ID,0.220 H,0.063 DIA PCB,0.015 X 0.032 BRASS,W/ RED NYLON COLLAR | 26364 | 104-01-02 |
| A1TP453 | 136-0352-00 | | | SOCKET,PIN TERM: | 80009 | 136-0352-00 |
| A1TP519 | 214-4085-00 | | | TERM,TEST POINT:0.070 ID,0.220 H,0.063 DIA PCB,0.015 X 0.032 BRASS,W/ RED NYLON COLLAR | 26364 | 104-01-02 |
| A1TP534 | 214-4085-00 | | | TERM,TEST POINT:0.070 ID,0.220 H,0.063 DIA PCB,0.015 X 0.032 BRASS,W/ RED NYLON COLLAR | 26364 | 104-01-02 |
| A1TP610 | 214-4085-00 | | | TERM,TEST POINT:0.070 ID,0.220 H,0.063 DIA PCB,0.015 X 0.032 BRASS,W/ RED NYLON COLLAR | 26364 | 104-01-02 |
| A1TP735 | 214-4085-00 | | | TERM,TEST POINT:0.070 ID,0.220 H,0.063 DIA PCB,0.015 X 0.032 BRASS,W/ RED NYLON COLLAR | 26364 | 104-01-02 |
| A1TP780 | 214-4085-00 | | | TERM,TEST POINT:0.070 ID,0.220 H,0.063 DIA PCB,0.015 X 0.032 BRASS,W/ RED NYLON COLLAR | 26364 | 104-01-02 |
| A1TP782 | 214-4085-00 | | | TERM,TEST POINT:0.070 ID,0.220 H,0.063 DIA PCB,0.015 X 0.032 BRASS,W/ RED NYLON COLLAR | 26364 | 104-01-02 |
| A1TP783 | 214-4085-00 | | | TERM,TEST POINT:0.070 ID,0.220 H,0.063 DIA PCB,0.015 X 0.032 BRASS,W/ RED NYLON COLLAR | 26364 | 104-01-02 |
| A1TP819 | 214-4085-00 | | | TERM,TEST POINT:0.070 ID,0.220 H,0.063 DIA PCB,0.015 X 0.032 BRASS,W/ RED NYLON COLLAR | 26364 | 104-01-02 |

| Component No. | Tektronix Part No. | Serial/Assembly No. Effective | Dscont | Name & Description | Mfr. Code | Mfr. Part No. |
|---|---|---|---|---|---|---|
| A1TP825 | 214-4085-00 | | | TERM,TEST POINT:0.070 ID,0.220 H,0.063 DIA PCB,0.015 X 0.032 BRASS,W/ RED NYLON COLLAR | 26364 | 104-01-02 |
| A1TP844 | 214-4085-00 | | | TERM,TEST POINT:0.070 ID,0.220 H,0.063 DIA PCB,0.015 X 0.032 BRASS,W/ RED NYLON COLLAR | 26364 | 104-01-02 |
| A1TP932 | 214-4085-00 | | | TERM,TEST POINT:0.070 ID,0.220 H,0.063 DIA PCB,0.015 X 0.032 BRASS,W/ RED NYLON COLLAR | 26364 | 104-01-02 |
| A1U116 | 156-3124-00 | | | IC,MISC:CMOS,ANALOG MUX;4 CHANNEL, DI ISOLATED, VIDEO;HI524,DIP18.3 | 80009 | 156-3124-00 |
| A1U126 | 156-2910-00 | | | IC,MISC:CMOS,ANALOG MUX;DUAL SPDT, DIELECTRIC ISOLATED;HI303,DIP14.3 | 80009 | 156-2910-00 |
| A1U154 | 156-0733-02 | | | IC,DIGITAL:LSTTL,MULTIVIBRATOR;DUPLICATE OF 156-0733-00;74LS221,DIP16.3,TUBE | 80009 | 156-0733-02 |
| A1U175 | 156-0733-02 | | | IC,DIGITAL:LSTTL,MULTIVIBRATOR;DUPLICATE OF 156-0733-00;74LS221,DIP16.3,TUBE | 80009 | 156-0733-02 |
| A1U216 | 156-2910-00 | | | IC,MISC:CMOS,ANALOG MUX;DUAL SPDT, DIELECTRIC ISOLATED;HI303,DIP14.3 | 80009 | 156-2910-00 |
| A1U224 | 156-1843-00 | | | IC,LINEAR:BIPOLAR,OP-AMP;DUAL,LOW OFFSET;OP 14EP,DIP08.3 | 80009 | 156-1843-00 |
| A1U232 | 156-3125-00 | | | IC,LINEAR:BIFET,OP-AMP;;LT1055CN8,DIP08.3 | 80009 | 156-3125-00 |
| A1U243 | 156-0936-00 | | | IC,LINEAR:BIPOLAR,OP-AMP;TRANSCONDUCTANCE;CA3080AS/5,TO-99 W/DIP08.3 LEADFORM | 02735 | CA3080AS/5 |
| A1U264 | 156-2516-00 | | | IC,MISC:BIPOLAR,TEMPERATURE SENSOR;CURRENT OUTPUT;AD592BN,TO-92 | 24355 | AD592BN |
| A1U266 | 156-2842-00 | | | IC,LINEAR:BIPOLAR,VOLTAGE REFERENCE;POSITIVE,10V,0.05%,20PPM,SERIES;LT1021CCN8-10,DIP08.3 | 80009 | 156-2842-00 |
| A1U270 | 156-3589-00 | | | IC,CONVERTER:BIPOLAR,V/F OR F/V;;VFC320CG,DIP14.3 | 80009 | 156-3589-00 |
| A1U278 | 156-1843-00 | | | IC,LINEAR:BIPOLAR,OP-AMP;DUAL,LOW OFFSET;OP 14EP,DIP08.3 | 80009 | 156-1843-00 |
| A1U326 | 155-0233-01 | | | MICROCKT,LINEAR:OPERATIONAL AMPLIFIER | 80009 | 155-0233-01 |
| A1U328 | 156-3331-00 | | | MICROCKT,HYBRID: | 80009 | 156-3331-00 |
| A1U338 | 156-3330-00 | | | MICROCKT,HYBRID: | 80009 | 156-3330-00 |
| A1U352 | 156-1843-00 | | | IC,LINEAR:BIPOLAR,OP-AMP;DUAL,LOW OFFSET;OP 14EP,DIP08.3 | 80009 | 156-1843-00 |
| A1U373 | 156-2256-00 | | | IC,DIGITAL:HCMOS,GATE;QUAD 2-INPUT NAND;74HC00,DIP14.3,TUBE | 80009 | 156-2256-00 |
| A1U375 | 156-1270-00 | | | IC,MISC:BIFET,ANALOG MUX;8 CHANNEL, 850 OHM, 1.6US;LF13508,DIP16.3 | 80009 | 156-1270-00 |
| A1U425 | 156-3125-00 | | | IC,LINEAR:BIFET,OP-AMP;;LT1055CN8,DIP08.3 | 80009 | 156-3125-00 |
| A1U430 | 156-3330-00 | | | MICROCKT,HYBRID: | 80009 | 156-3330-00 |
| A1U436 | 156-2910-00 | | | IC,MISC:CMOS,ANALOG MUX;DUAL SPDT, DIELECTRIC ISOLATED;HI303,DIP14.3 | 80009 | 156-2910-00 |
| A1U442 | 156-0936-00 | | | IC,LINEAR:BIPOLAR,OP-AMP;TRANSCONDUCTANCE;CA3080AS/5,TO-99 W/DIP08.3 LEADFORM | 02735 | CA3080AS/5 |
| A1U458 | 155-0233-01 | | | MICROCKT,LINEAR:OPERATIONAL AMPLIFIER | 80009 | 155-0233-01 |
| A1U464 | 156-3510-00 | | | IC,CONVERTER:CMOS,D/A;OCTAL,8 BIT,VOLTAGE OUT,MPU COMPATIBLE,PARALLEL BUS;AD7228KN,DIP24.3 | 80009 | 156-3510-00 |
| A1U468 | 156-2459-00 | | | IC,CONVERTER:BIPOLAR,D/A;12 BIT,VOLTAGE OUT,MPU COMPATIBLE,REFERENCE;AD667JN,DIP28.6 | 80009 | 156-2459-00 |
| A1U477 | 156-1270-00 | | | IC,MISC:BIFET,ANALOG MUX;8 CHANNEL, 850 OHM, 1.6US;LF13508,DIP16.3 | 80009 | 156-1270-00 |
| A1U523 | 156-3331-00 | | | MICROCKT,HYBRID: | 80009 | 156-3331-00 |
| A1U528 | 155-0233-01 | | | MICROCKT,LINEAR:OPERATIONAL AMPLIFIER | 80009 | 155-0233-01 |
| A1U533 | 156-3330-00 | | | MICROCKT,HYBRID: | 80009 | 156-3330-00 |
| A1U535 | 156-3330-00 | | | MICROCKT,HYBRID: | 80009 | 156-3330-00 |
| A1U542 | 156-2910-00 | | | IC,MISC:CMOS,ANALOG MUX;DUAL SPDT, DIELECTRIC ISOLATED;HI303,DIP14.3 | 80009 | 156-2910-00 |

| Component No. | Tektronix Part No. | Serial/Assembly No. Effective | Dscont | Name & Description | Mfr. Code | Mfr. Part No. |
|---|---|---|---|---|---|---|
| A1U553 | 156-0991-00 | | | IC,LINEAR:BIPOLAR,VOLTAGE REGULATOR;POSITIV E,5.0V,100MA,5%;MC78L05ACP,TO-92 | 80009 | 156-0991-00 |
| A1U618 | 156-1843-00 | | | IC,LINEAR:BIPOLAR,OP-AMP;DUAL,LOW OFFSET;OP 14EP,DIP08.3 | 80009 | 156-1843-00 |
| A1U628 | 156-3125-00 | | | IC,LINEAR:BIFET,OP-AMP;;LT1055CN8,DIP08.3 | 80009 | 156-3125-00 |
| A1U638 | 156-2910-00 | | | IC,MISC:CMOS,ANALOG MUX;DUAL SPDT, DIELECTR IC ISOLATED;HI303,DIP14.3 | 80009 | 156-2910-00 |
| A1U664 | 156-1589-00 | | | IC,CONVERTER:BIPOLAR,D/A;12 BIT,CURRENT OUT ,MULTIPLYING;AM6012/DAC312,DIP20.3 | 80009 | 156-1589-00 |
| A1U668 | 160-5125-00 | | | MICROCKT,DGTL:LOW PWR PRGM ARRAY LOGIC,PRGM | 80009 | 160-5125-00 |
| | | | | *MOUNTING PARTS* | | |
| | 136-0752-00 | | | SKT,PL-IN ELEK:MICROCIRCUIT,20 DIP | 09922 | DILB20P-108 |
| | | | | *END MOUNTING PARTS* | | |
| A1U676 | 156-0480-02 | | | IC,DIGITAL:LSTTL,GATES;DUPLICATE OF 156-048 0-00;74LS08,DIP14.3,TUBE | 80009 | 156-0480-02 |
| | | | | *MOUNTING PARTS* | | |
| | 136-0728-00 | | | SKT,PL-IN ELEK:MICROCKT,14 CONTACT | 09922 | DILB14P-108 |
| | | | | *END MOUNTING PARTS* | | |
| A1U688 | 156-0285-00 | | | IC,LINEAR:BIPOLAR,VOLTAGE REGULATOR;POSITIV E,12V,1.0A,4%;MC7812CT,TO-220 | 80009 | 156-0285-00 |
| | | | | *MOUNTING PARTS* | | |
| A1U688 | 210-0586-00 | | | NUT,PL,ASSEM WA:4-40 X 0.25,STL CD PL | 78189 | 211-041800-00 |
| A1U688 | 211-0008-00 | | | SCREW,MACHINE:4-40 X 0.25,PNH,STL | 93907 | ORDER BY DESCR |
| | | | | *END MOUNTING PARTS* | | |
| A1U724 | 156-3331-00 | | | MICROCKT,HYBRID: | 80009 | 156-3331-00 |
| A1U728 | 155-0233-01 | | | MICROCKT,LINEAR:OPERATIONAL AMPLIFIER | 80009 | 155-0233-01 |
| A1U733 | 156-3330-00 | | | MICROCKT,HYBRID: | 80009 | 156-3330-00 |
| A1U735 | 156-3330-00 | | | MICROCKT,HYBRID: | 80009 | 156-3330-00 |
| A1U742 | 156-0936-00 | | | IC,LINEAR:BIPOLAR,OP-AMP;TRANSCONDUCTANCE;C A3080AS/5,TO-99 W/DIP08.3 LEADFORM | 02735 | CA3080AS/5 |
| A1U747 | 155-0233-01 | | | MICROCKT,LINEAR:OPERATIONAL AMPLIFIER | 80009 | 155-0233-01 |
| A1U767 | 156-0368-00 | | | IC,DIGITAL:ECL,TRANSLATOR;QUAD TTL TO ECL;1 0124,DIP16.3,TUBE,CER PACK | 80009 | 156-0368-00 |
| A1U772 | 156-1646-00 | | | IC,DIGITAL:HCTCMOS,FLIP FLOP;OCTAL D-TYPE,3 -STATE;74HCT374,DIP20.3,TUBE | 18324 | 74HCT374N |
| A1U775 | 156-1646-00 | | | IC,DIGITAL:HCTCMOS,FLIP FLOP;OCTAL D-TYPE,3 -STATE;74HCT374,DIP20.3,TUBE | 18324 | 74HCT374N |
| A1U784 | 156-0872-00 | | | IC,LINEAR:BIPOLAR,VOLTAGE REGULATOR;NEGATIV E,-12V,1.0A,4%;MC7912CT,TO-220 | 04713 | MC7912CT |
| | | | | *MOUNTING PARTS* | | |
| | 210-0586-00 | | | NUT,PL,ASSEM WA:4-40 X 0.25,STL CD PL | 78189 | 211-041800-00 |
| | 211-0008-00 | | | SCREW,MACHINE:4-40 X 0.25,PNH,STL | 93907 | ORDER BY DESCR |
| | | | | *END MOUNTING PARTS* | | |
| A1U848 | 155-0228-00 | 671-0535-05 | 671-0535-07 | MICROCKT,DGTL:5 BIT A/D CONVERTER | 80009 | 155-0228-00 |
| A1U848 | 155-0228-01 | 671-0535-07 | | MICROCKT,DGTL:5 BIT A/D CONVERTER | 80009 | 155-0228-01 |
| | | | | *MOUNTING PARTS* | | |
| | 136-0753-00 | | | SOCKET,PIN TERM:U/W 0.043 DIA PIN | 80009 | 136-0753-00 |
| | | | | *END MOUNTING PARTS* | | |
| A1U856 | 155-0228-00 | 671-0535-05 | 671-0535-07 | MICROCKT,DGTL:5 BIT A/D CONVERTER | 80009 | 155-0228-00 |
| A1U856 | 155-0228-01 | 671-0535-07 | | MICROCKT,DGTL:5 BIT A/D CONVERTER | 80009 | 155-0228-01 |
| | | | | *MOUNTING PARTS* | | |
| | 136-0753-00 | | | SOCKET,PIN TERM:U/W 0.043 DIA PIN | 80009 | 136-0753-00 |
| | | | | *END MOUNTING PARTS* | | |
| A1U864 | 156-0509-00 | | | IC,CONVERTER:BIPOLAR,D/A;8 BIT,400NS, MULTI PLYING,CURRENT OUTPUT;MC1408,DIP16.3 | 80009 | 156-0509-00 |
| A1U868 | 156-0368-00 | | | IC,DIGITAL:ECL,TRANSLATOR;QUAD TTL TO ECL;1 0124,DIP16.3,TUBE,CER PACK | 80009 | 156-0368-00 |
| A1U873 | 156-1646-00 | | | IC,DIGITAL:HCTCMOS,FLIP FLOP;OCTAL D-TYPE,3 -STATE;74HCT374,DIP20.3,TUBE | 18324 | 74HCT374N |
| A1U875 | 156-1646-00 | | | IC,DIGITAL:HCTCMOS,FLIP FLOP;OCTAL D-TYPE,3 -STATE;74HCT374,DIP20.3,TUBE | 18324 | 74HCT374N |

| Component No. | Tektronix Part No. | Serial/Assembly No. Effective | Dscont | Name & Description | Mfr. Code | Mfr. Part No. |
|---|---|---|---|---|---|---|
| A1U890 | 156-0158-00 | | | IC,LINEAR:BIPOLAR,OP-AMP;DUAL;MC1458P1,DIP0 8.3 | 80009 | 156-0158-00 |
| A1U935 | 155-0233-01 | | | MICROCKT,LINEAR:OPERATIONAL AMPLIFIER | 80009 | 155-0233-01 |
| A1U946 | 156-3330-00 | | | MICROCKT,HYBRID: | 80009 | 156-3330-00 |
| A1VR132 | 152-0166-00 | | | DIODE,ZENER:,;6.2V,5%,0.4W;1N753A,DO-7 OR 3 5,TR | 80009 | 152-0166-00 |
| A1VR420 | 152-0807-00 | | | SEMICOND DVC,DI:ZEN,SI,2.7V,5%,400MW,DO-35 OR DO-7 | 80009 | 152-0807-00 |
| A1VR421 | 152-0807-00 | | | SEMICOND DVC,DI:ZEN,SI,2.7V,5%,400MW,DO-35 OR DO-7 | 80009 | 152-0807-00 |
| A1VR422 | 152-0807-00 | | | SEMICOND DVC,DI:ZEN,SI,2.7V,5%,400MW,DO-35 OR DO-7 | 80009 | 152-0807-00 |
| A1VR520 | 152-0807-00 | | | SEMICOND DVC,DI:ZEN,SI,2.7V,5%,400MW,DO-35 OR DO-7 | 80009 | 152-0807-00 |
| A1VR621 | 152-0807-00 | | | SEMICOND DVC,DI:ZEN,SI,2.7V,5%,400MW,DO-35 OR DO-7 | 80009 | 152-0807-00 |
| A1VR722 | 152-0807-00 | | | SEMICOND DVC,DI:ZEN,SI,2.7V,5%,400MW,DO-35 OR DO-7 | 80009 | 152-0807-00 |

| Component No. | Tektronix Part No. | Serial/Assembly No. Effective | Dscont | Name & Description | Mfr. Code | Mfr. Part No. |
|---|---|---|---|---|---|---|
| A2 | 672-1294-01 | B022000 | B023422 | CIRCUIT BD ASSY:GEN LOCK | 80009 | 672-1294-01 |
| A2 | 672-1294-02 | B023423 | B030690 | CIRCUIT BD ASSY:GEN LOCK | 80009 | 672-1294-02 |
| A2 | 672-1294-03 | B030691 | | CIRCUIT BD ASSY:GEN LOCK | 80009 | 672-1294-03 |

| Component No. | Tektronix Part No. | Serial/Assembly No. Effective | Dscont | Name & Description | Mfr. Code | Mfr. Part No. |
|---|---|---|---|---|---|---|
| A2A1 | 671-0105-01 | 672-1294-01 | 672-1294-01 | CIRCUIT BD ASSY:GEN LOCK | 80009 | 671-0105-01 |
| A2A1 | 671-0105-02 | 672-1294-02 | 672-1294-02 | CIRCUIT BD ASSY:GEN LOCK | 80009 | 671-0105-02 |
| A2A1 | 671-0105-03 | 672-1294-03 | | CIRCUIT BD ASSY:GEN LOCK | 80009 | 671-0105-03 |
| | | | | *ATTACHED PARTS* | | |
| | 337-1417-00 | | | SHIELD,ELEC:0.55 SQ X 0.685 INCH HIGH | 32436 | A-1020002-1 |
| | | | | *END ATTACHED PARTS* | | |
| A2A1C179 | 281-0775-01 | | | CAP,FXD,CER DI:0.1UF,20%,50V | 04222 | SA105E104MAA |
| A2A1C192 | 281-0775-01 | | | CAP,FXD,CER DI:0.1UF,20%,50V | 04222 | SA105E104MAA |
| A2A1C237 | 281-0759-00 | | | CAP,FXD,CER DI:22PF,10%,100V | 80009 | 281-0759-00 |
| A2A1C246 | 281-0775-01 | | | CAP,FXD,CER DI:0.1UF,20%,50V | 04222 | SA105E104MAA |
| A2A1C254 | 281-0775-01 | | | CAP,FXD,CER DI:0.1UF,20%,50V | 04222 | SA105E104MAA |
| A2A1C264 | 283-0648-00 | | | CAP,FXD,MICA DI:10PF,+/-0.5PF,500V | 80009 | 283-0648-00 |
| A2A1C266 | 283-0648-00 | | | CAP,FXD,MICA DI:10PF,+/-0.5PF,500V | 80009 | 283-0648-00 |
| A2A1C270 | 283-0648-00 | | | CAP,FXD,MICA DI:10PF,+/-0.5PF,500V | 80009 | 283-0648-00 |
| A2A1C282 | 281-0775-01 | | | CAP,FXD,CER DI:0.1UF,20%,50V | 04222 | SA105E104MAA |
| A2A1C284 | 281-0775-01 | | | CAP,FXD,CER DI:0.1UF,20%,50V | 04222 | SA105E104MAA |
| A2A1C292 | 281-0775-01 | | | CAP,FXD,CER DI:0.1UF,20%,50V | 04222 | SA105E104MAA |
| A2A1C312 | 290-0973-00 | | | CAP,FXD,ELCTLT:100UF,20%,25VDC | 24165 | 513D107M025BB4D |
| A2A1C316 | 283-0238-00 | | | CAP,FXD,CER DI:0.01UF,10%,50V | 80009 | 283-0238-00 |
| A2A1C328 | 285-1075-00 | | | CAP,FXD,PLASTIC:0.1UF,5%,100V | 14752 | 230B1B104J |
| A2A1C356 | 283-0690-00 | | | CAP,FXD,MICA DI:560PF,1%,300V | 80009 | 283-0690-00 |
| A2A1C369 | 281-0775-01 | | | CAP,FXD,CER DI:0.1UF,20%,50V | 04222 | SA105E104MAA |
| A2A1C377 | 281-0775-01 | | | CAP,FXD,CER DI:0.1UF,20%,50V | 04222 | SA105E104MAA |
| A2A1C378 | 281-0775-01 | | | CAP,FXD,CER DI:0.1UF,20%,50V | 04222 | SA105E104MAA |
| A2A1C385 | 281-0775-01 | | | CAP,FXD,CER DI:0.1UF,20%,50V | 04222 | SA105E104MAA |
| A2A1C412 | 290-0290-00 | | | CAP,FXD,ELCTLT:10UF,20%,25V NPLZD | 80009 | 290-0290-00 |
| A2A1C417 | 281-0775-01 | | | CAP,FXD,CER DI:0.1UF,20%,50V | 04222 | SA105E104MAA |
| A2A1C423 | 281-0775-01 | | | CAP,FXD,CER DI:0.1UF,20%,50V | 04222 | SA105E104MAA |
| A2A1C429 | 283-0359-00 | | | CAP,FXD,CER DI:1000PF,10%,200V | 04222 | SR212A102KAA |
| A2A1C448 | 281-0775-01 | | | CAP,FXD,CER DI:0.1UF,20%,50V | 04222 | SA105E104MAA |
| A2A1C452 | 283-0648-00 | | | CAP,FXD,MICA DI:10PF,+/-0.5PF,500V | 80009 | 283-0648-00 |
| A2A1C463 | 281-0775-01 | | | CAP,FXD,CER DI:0.1UF,20%,50V | 04222 | SA105E104MAA |
| A2A1C467 | 281-0775-01 | | | CAP,FXD,CER DI:0.1UF,20%,50V | 04222 | SA105E104MAA |
| A2A1C472 | 281-0775-01 | | | CAP,FXD,CER DI:0.1UF,20%,50V | 04222 | SA105E104MAA |
| A2A1C476 | 281-0775-01 | | | CAP,FXD,CER DI:0.1UF,20%,50V | 04222 | SA105E104MAA |
| A2A1C479 | 281-0775-01 | | | CAP,FXD,CER DI:0.1UF,20%,50V | 04222 | SA105E104MAA |
| A2A1C517 | 281-0775-01 | | | CAP,FXD,CER DI:0.1UF,20%,50V | 04222 | SA105E104MAA |
| A2A1C521 | 281-0759-00 | | | CAP,FXD,CER DI:22PF,10%,100V | 80009 | 281-0759-00 |
| A2A1C523 | 281-0775-01 | | | CAP,FXD,CER DI:0.1UF,20%,50V | 04222 | SA105E104MAA |
| A2A1C526 | 283-0339-00 | | | CAP,FXD,CER DI:0.22UF,10%,50V | 04222 | SR305C224KAA |
| A2A1C545 | 281-0775-01 | | | CAP,FXD,CER DI:0.1UF,20%,50V | 04222 | SA105E104MAA |
| A2A1C546 | 281-0773-00 | | | CAP,FXD,CER DI:0.01UF,10%,100V | 80009 | 281-0773-00 |
| A2A1C550 | 281-0773-00 | | | CAP,FXD,CER DI:0.01UF,10%,100V | 80009 | 281-0773-00 |
| A2A1C551 | 281-0775-01 | | | CAP,FXD,CER DI:0.1UF,20%,50V | 04222 | SA105E104MAA |
| A2A1C552 | 281-0775-01 | | | CAP,FXD,CER DI:0.1UF,20%,50V | 04222 | SA105E104MAA |
| A2A1C562 | 281-0775-01 | | | CAP,FXD,CER DI:0.1UF,20%,50V | 04222 | SA105E104MAA |
| A2A1C579 | 281-0775-01 | | | CAP,FXD,CER DI:0.1UF,20%,50V | 04222 | SA105E104MAA |
| A2A1C624 | 290-0974-00 | | | CAP,FXD,ELCTLT:10UF,20%,50VDC | 55680 | UVX1H100MAA |
| A2A1C626 | 281-0815-00 | | | CAP,FXD,CER DI:0.027UF,20%,50V | 04222 | SA205C273MAA |
| A2A1C627 | 281-0775-01 | | | CAP,FXD,CER DI:0.1UF,20%,50V | 04222 | SA105E104MAA |
| A2A1C628 | 283-0598-00 | | | CAP,FXD,MICA DI:253PF,5%,500V | 80009 | 283-0598-00 |
| A2A1C629 | 290-0534-00 | | | CAP,FXD,ELCTLT:1UF,20%,35V | 05397 | T368A105M035AZ |
| A2A1C638 | 290-0573-00 | | | CAP,FXD,ELCTLT:2.7UF,20%,50V | 05397 | T368B275M050AS |
| A2A1C644 | 281-0775-01 | | | CAP,FXD,CER DI:0.1UF,20%,50V | 04222 | SA105E104MAA |
| A2A1C652 | 281-0775-01 | | | CAP,FXD,CER DI:0.1UF,20%,50V | 04222 | SA105E104MAA |
| A2A1C657 | 283-0238-00 | | | CAP,FXD,CER DI:0.01UF,10%,50V | 80009 | 283-0238-00 |
| A2A1C664 | 281-0775-01 | | | CAP,FXD,CER DI:0.1UF,20%,50V | 04222 | SA105E104MAA |
| A2A1C669 | 283-0796-00 | | | CAP,FXD,MICA DI:100PF,5%,500V | 80009 | 283-0796-00 |
| A2A1C679 | 281-0775-01 | | | CAP,FXD,CER DI:0.1UF,20%,50V | 04222 | SA105E104MAA |

| Component No. | Tektronix Part No. | Serial/Assembly No. Effective | Dscont | Name & Description | Mfr. Code | Mfr. Part No. |
|---|---|---|---|---|---|---|
| A2A1C682 | 281-0775-01 | | | CAP,FXD,CER DI:0.1UF,20%,50V | 04222 | SA105E104MAA |
| A2A1C719 | 283-0598-00 | | | CAP,FXD,MICA DI:253PF,5%,500V | 80009 | 283-0598-00 |
| A2A1C724 | 283-0194-00 | | | CAP,FXD,CER DI:4.7UF,20%,50V | 05397 | C350C475M5UICA |
| A2A1C733 | 281-0775-01 | | | CAP,FXD,CER DI:0.1UF,20%,50V | 04222 | SA105E104MAA |
| A2A1C754 | 281-0775-01 | | | CAP,FXD,CER DI:0.1UF,20%,50V | 04222 | SA105E104MAA |
| A2A1C764 | 281-0775-01 | | | CAP,FXD,CER DI:0.1UF,20%,50V | 04222 | SA105E104MAA |
| A2A1C782 | 281-0775-01 | | | CAP,FXD,CER DI:0.1UF,20%,50V | 04222 | SA105E104MAA |
| A2A1C811 | 281-0775-01 | | | CAP,FXD,CER DI:0.1UF,20%,50V | 04222 | SA105E104MAA |
| A2A1C815 | 290-0950-00 | | | CAP,FXD,ELCTLT:100UF,+50-20%,50WVDC | 80009 | 290-0950-00 |
| A2A1C816 | 281-0775-01 | | | CAP,FXD,CER DI:0.1UF,20%,50V | 04222 | SA105E104MAA |
| A2A1C826 | 281-0775-01 | | | CAP,FXD,CER DI:0.1UF,20%,50V | 04222 | SA105E104MAA |
| A2A1C827 | 281-0775-01 | | | CAP,FXD,CER DI:0.1UF,20%,50V | 04222 | SA105E104MAA |
| A2A1C832 | 283-0190-00 | | | CAP,FXD,CER DI:0.47UF,5%,50V | 04222 | SR305C474JAA |
| A2A1C835 | 290-0986-00 | | | CAP,FXD,ELCTLT:47UF,20%,50V | 55680 | TLB1H470MAA |
| A2A1C838 | 290-0986-00 | | | CAP,FXD,ELCTLT:47UF,20%,50V | 55680 | TLB1H470MAA |
| A2A1C845 | 290-0920-00 | | | CAP,FXD,ELCTLT:33UF,+50-20%,35WVDC | 55680 | UVX1H330MAA |
| A2A1C912 | 290-0950-00 | | | CAP,FXD,ELCTLT:100UF,+50-20%,50WVDC | 80009 | 290-0950-00 |
| A2A1C914 | 281-0775-01 | | | CAP,FXD,CER DI:0.1UF,20%,50V | 04222 | SA105E104MAA |
| A2A1C916 | 290-0950-00 | | | CAP,FXD,ELCTLT:100UF,+50-20%,50WVDC | 80009 | 290-0950-00 |
| A2A1C923 | 281-0775-01 | | | CAP,FXD,CER DI:0.1UF,20%,50V | 04222 | SA105E104MAA |
| A2A1C925 | 290-0534-00 | | | CAP,FXD,ELCTLT:1UF,20%,35V | 05397 | T368A105M035AZ |
| A2A1C930 | 281-0775-01 | | | CAP,FXD,CER DI:0.1UF,20%,50V | 04222 | SA105E104MAA |
| A2A1C934 | 281-0775-01 | | | CAP,FXD,CER DI:0.1UF,20%,50V | 04222 | SA105E104MAA |
| A2A1C935 | 281-0775-01 | | | CAP,FXD,CER DI:0.1UF,20%,50V | 04222 | SA105E104MAA |
| A2A1C936 | 290-0986-00 | | | CAP,FXD,ELCTLT:47UF,20%,50V | 55680 | TLB1H470MAA |
| A2A1C938 | 290-0986-00 | | | CAP,FXD,ELCTLT:47UF,20%,50V | 55680 | TLB1H470MAA |
| A2A1CR323 | 152-0141-02 | | | DIODE,SIG:,ULTRA FAST;40V,150MA,4NS,2PF;1N4152,DO-35,T&R | 80009 | 152-0141-02 |
| A2A1CR324 | 152-0141-02 | | | DIODE,SIG:,ULTRA FAST;40V,150MA,4NS,2PF;1N4152,DO-35,T&R | 80009 | 152-0141-02 |
| A2A1CR325 | 152-0141-02 | | | DIODE,SIG:,ULTRA FAST;40V,150MA,4NS,2PF;1N4152,DO-35,T&R | 80009 | 152-0141-02 |
| A2A1CR423 | 152-0141-02 | | | DIODE,SIG:,ULTRA FAST;40V,150MA,4NS,2PF;1N4152,DO-35,T&R | 80009 | 152-0141-02 |
| A2A1CR515 | 152-0141-02 | | | DIODE,SIG:,ULTRA FAST;40V,150MA,4NS,2PF;1N4152,DO-35,T&R | 80009 | 152-0141-02 |
| A2A1DS173 | 150-1200-00 | | | LT EMITTING DIO:RED,2V | 80009 | 150-1200-00 |
| A2A1DS175 | 150-1198-00 | | | LT EMITTING DIO:AMBER,2V | 80009 | 150-1198-00 |
| A2A1DS176 | 150-1199-00 | | | LT EMITTING DIO:GREEN,2V | 80009 | 150-1199-00 |
| A2A1DS177 | 150-1198-00 | | | LT EMITTING DIO:AMBER,2V | 80009 | 150-1198-00 |
| A2A1DS179 | 150-1198-00 | | | LT EMITTING DIO:AMBER,2V | 80009 | 150-1198-00 |
| A2A1F830 | 159-0204-00 | | | FUSE,WIRE LEAD:3.0A,125V,5 SECONDS | TK0946 | SP7-3A |
| A2A1J195 | 131-0608-00 | | | TERMINAL,PIN:0.365 L X 0.025 BRZ GLD PL (QUANTITY 10) | 80009 | 131-0608-00 |
| A2A1J295 | 131-0608-00 | | | TERMINAL,PIN:0.365 L X 0.025 BRZ GLD PL (QUANTITY 4) | 80009 | 131-0608-00 |
| A2A1J318 | 131-0608-00 | | | TERMINAL,PIN:0.365 L X 0.025 BRZ GLD PL (QUANTITY 3) | 80009 | 131-0608-00 |
| A2A1J358 | 131-0391-00 | | | CONN,RF JACK: *ATTACHED PARTS* | 80009 | 131-0391-00 |
| | 210-1160-00 | | | WASHER,FLAT:0.129 ID X 0.25 OD X 0.031 *END ATTACHED PARTS* | 86928 | 5612-32-31 |
| A2A1J573 | 131-0608-00 | | | TERMINAL,PIN:0.365 L X 0.025 BRZ GLD PL (QUANTITY 3) | 80009 | 131-0608-00 |
| A2A1J578 | 131-0608-00 | | | TERMINAL,PIN:0.365 L X 0.025 BRZ GLD PL (QUANTITY 2) | 80009 | 131-0608-00 |
| A2A1J694 | 174-0838-00 | | | CA ASSY,SP,ELEC:34,30 AWG,9.2 L,RIBBON | 80009 | 174-0838-00 |
| A2A1J779 | 131-0608-00 | | | TERMINAL,PIN:0.365 L X 0.025 BRZ GLD PL (QUANTITY 3) | 80009 | 131-0608-00 |
| A2A1J914 | 131-0608-00 | | | TERMINAL,PIN:0.365 L X 0.025 BRZ GLD PL | 80009 | 131-0608-00 |

| Component No. | Tektronix Part No. | Serial/Assembly No. Effective | Dscont | Name & Description | Mfr. Code | Mfr. Part No. |
|---|---|---|---|---|---|---|
| | | | | (QUANTITY 2) | | |
| A2A1J928 | 131-4136-00 | 671-0105-01 | 671-0105-01 | CONN,HDR PWR:PCB,;MALE,STR,1 X 10,0.156 CTR ,0.450 MLG X 0.172 TAIL,0.045 SQ,GOLD;,, | 27264 | 26-48-2101 |
| A2A1J928 | 131-4884-00 | 671-0105-02 | | CONN,HDR PWR: | 80009 | 131-4884-00 |
| A2A1L722 | 108-0317-00 | | | COIL,RF:FIXED,15 UH | TK1345 | 108-0317-00 |
| A2A1P318 | 131-0993-02 | | | BUS,CONDUCTOR:SHUNT ASSEMBLY,RED | 00779 | 1-850100-0 |
| A2A1P573 | 131-0993-02 | | | BUS,CONDUCTOR:SHUNT ASSEMBLY,RED | 00779 | 1-850100-0 |
| A2A1P779 | 131-0993-02 | | | BUS,CONDUCTOR:SHUNT ASSEMBLY,RED | 00779 | 1-850100-0 |
| A2A1Q134 | 151-0302-00 | | | TRANSISTOR,SIG:BIPOLAR,NPN;40V,800MA,300MHZ ,AMPLIFIER;2N2222A,TO-18 | 80009 | 151-0302-00 |
| A2A1Q136 | 151-0301-00 | | | TRANSISTOR,SIG:BIPOLAR,PNP;60V,600MA,200MHZ ,AMPLIFIER;2N2907A,TO-18 | 80009 | 151-0301-00 |
| A2A1Q146 | 151-0302-00 | | | TRANSISTOR,SIG:BIPOLAR,NPN;40V,800MA,300MHZ ,AMPLIFIER;2N2222A,TO-18 | 80009 | 151-0302-00 |
| A2A1Q234 | 151-0302-00 | | | TRANSISTOR,SIG:BIPOLAR,NPN;40V,800MA,300MHZ ,AMPLIFIER;2N2222A,TO-18 | 80009 | 151-0302-00 |
| A2A1Q236 | 151-0301-00 | | | TRANSISTOR,SIG:BIPOLAR,PNP;60V,600MA,200MHZ ,AMPLIFIER;2N2907A,TO-18 | 80009 | 151-0301-00 |
| A2A1Q532 | 151-0261-00 | | | TRANSISTOR,SIG:BIPOLAR,PNP;60V,50MA,100MHZ, AMPLIFIER,TWO DIE DUAL;2N3810,TO-77 | 80009 | 151-0261-00 |
| A2A1Q533 | 151-0302-00 | | | TRANSISTOR,SIG:BIPOLAR,NPN;40V,800MA,300MHZ ,AMPLIFIER;2N2222A,TO-18 | 80009 | 151-0302-00 |
| A2A1Q534 | 151-0302-00 | | | TRANSISTOR,SIG:BIPOLAR,NPN;40V,800MA,300MHZ ,AMPLIFIER;2N2222A,TO-18 | 80009 | 151-0302-00 |
| A2A1Q535 | 151-0301-00 | | | TRANSISTOR,SIG:BIPOLAR,PNP;60V,600MA,200MHZ ,AMPLIFIER;2N2907A,TO-18 | 80009 | 151-0301-00 |
| A2A1Q536 | 151-0301-00 | | | TRANSISTOR,SIG:BIPOLAR,PNP;60V,600MA,200MHZ ,AMPLIFIER;2N2907A,TO-18 | 80009 | 151-0301-00 |
| A2A1Q644 | 151-0220-00 | | | TRANSISTOR,SIG:BIPOLAR,PNP;40V,200MA,400MHZ ,AMPLIFIER;2N3906(SEL),TO-92 EBC | 80009 | 151-0220-00 |
| A2A1Q645 | 151-0302-00 | | | TRANSISTOR,SIG:BIPOLAR,NPN;40V,800MA,300MHZ ,AMPLIFIER;2N2222A,TO-18 | 80009 | 151-0302-00 |
| A2A1R138 | 315-0103-00 | | | RES,FXD,FILM:10K OHM,5%,0.25W | 80009 | 315-0103-00 |
| A2A1R139 | 315-0182-00 | | | RES,FXD,FILM:1.8K OHM,5%,0.25W | 80009 | 315-0182-00 |
| A2A1R141 | 315-0182-00 | | | RES,FXD,FILM:1.8K OHM,5%,0.25W | 80009 | 315-0182-00 |
| A2A1R142 | 315-0561-00 | | | RES,FXD,FILM:560 OHM,5%,0.25W | 80009 | 315-0561-00 |
| A2A1R143 | 315-0332-00 | | | RES,FXD,FILM:3.3K OHM,5%,0.25W | 80009 | 315-0332-00 |
| A2A1R144 | 315-0332-00 | | | RES,FXD,FILM:3.3K OHM,5%,0.25W | 80009 | 315-0332-00 |
| A2A1R168 | 315-0102-00 | | | RES,FXD,FILM:1K OHM,5%,0.25W | 80009 | 315-0102-00 |
| A2A1R169 | 315-0471-00 | | | RES,FXD,FILM:470 OHM,5%,0.25W | 80009 | 315-0471-00 |
| A2A1R171 | 315-0102-00 | | | RES,FXD,FILM:1K OHM,5%,0.25W | 80009 | 315-0102-00 |
| A2A1R184 | 307-0526-00 | | | RES,NTWK:THICK FILM;(5)510 OHM,10%,0.125W E ACH,TC=100 PPM;SIP6,PIN 1 COMMON | 57924 | 4306X-101-511 |
| A2A1R211 | 322-3238-00 | | | RES,FXD,FILM:2.94K OHM,1%,0.2W,TC=T0 | 57668 | CRB20 FXE 2K94 |
| A2A1R212 | 322-3289-00 | | | RES,FXD:METAL FILM;10K OHM,1%,0.2W,TC=100 P PM;AXIAL,T&R,SMALL BODY | 80009 | 322-3289-00 |
| A2A1R237 | 315-0561-00 | | | RES,FXD,FILM:560 OHM,5%,0.25W | 80009 | 315-0561-00 |
| A2A1R238 | 315-0561-00 | | | RES,FXD,FILM:560 OHM,5%,0.25W | 80009 | 315-0561-00 |
| A2A1R239 | 315-0102-00 | | | RES,FXD,FILM:1K OHM,5%,0.25W | 80009 | 315-0102-00 |
| A2A1R240 | 315-0103-00 | | | RES,FXD,FILM:10K OHM,5%,0.25W | 80009 | 315-0103-00 |
| A2A1R241 | 315-0391-00 | | | RES,FXD,FILM:390 OHM,5%,0.25W | 80009 | 315-0391-00 |
| A2A1R242 | 315-0391-00 | | | RES,FXD,FILM:390 OHM,5%,0.25W | 80009 | 315-0391-00 |
| A2A1R243 | 315-0332-00 | | | RES,FXD,FILM:3.3K OHM,5%,0.25W | 80009 | 315-0332-00 |
| A2A1R244 | 315-0182-00 | | | RES,FXD,FILM:1.8K OHM,5%,0.25W | 80009 | 315-0182-00 |
| A2A1R245 | 315-0182-00 | | | RES,FXD,FILM:1.8K OHM,5%,0.25W | 80009 | 315-0182-00 |
| A2A1R246 | 315-0332-00 | | | RES,FXD,FILM:3.3K OHM,5%,0.25W | 80009 | 315-0332-00 |
| A2A1R262 | 307-1318-00 | | | RES NTWK,FXD,FI:(2) 162 OHM,(2) 260 OHM,2%, 0.125W | 80009 | 307-1318-00 |
| A2A1R265 | 315-0271-00 | | | RES,FXD,FILM:270 OHM,5%,0.25W | 80009 | 315-0271-00 |

| Component No. | Tektronix Part No. | Serial/Assembly No. Effective | Dscont | Name & Description | Mfr. Code | Mfr. Part No. |
|---|---|---|---|---|---|---|
| A2A1R268 | 315-0271-00 | | | RES,FXD,FILM:270 OHM,5%,0.25W | 80009 | 315-0271-00 |
| A2A1R269 | 315-0271-00 | | | RES,FXD,FILM:270 OHM,5%,0.25W | 80009 | 315-0271-00 |
| A2A1R276 | 307-0539-00 | | | RES NTWK,FXD,FI:(7)510 OHM,10%,1W | 80009 | 307-0539-00 |
| A2A1R284 | 315-0102-00 | | | RES,FXD,FILM:1K OHM,5%,0.25W | 80009 | 315-0102-00 |
| A2A1R286 | 315-0102-00 | | | RES,FXD,FILM:1K OHM,5%,0.25W | 80009 | 315-0102-00 |
| A2A1R292 | 307-0596-00 | | | RES NTWK,FXD,FI:7,2.2K OHM,2%,1.0W | 80009 | 307-0596-00 |
| A2A1R294 | 315-0222-00 | | | RES,FXD,FILM:2.2K OHM,5%,0.25W | 80009 | 315-0222-00 |
| A2A1R315 | 315-0104-00 | | | RES,FXD,FILM:100K OHM,5%,0.25W | 80009 | 315-0104-00 |
| A2A1R316 | 315-0104-00 | | | RES,FXD,FILM:100K OHM,5%,0.25W | 80009 | 315-0104-00 |
| A2A1R317 | 315-0393-00 | | | RES,FXD,FILM:39K OHM,5%,0.25W | 80009 | 315-0393-00 |
| A2A1R318 | 315-0105-00 | | | RES,FXD,FILM:1M OHM,5%,0.25W | 80009 | 315-0105-00 |
| A2A1R319 | 315-0391-00 | | | RES,FXD,FILM:390 OHM,5%,0.25W | 80009 | 315-0391-00 |
| A2A1R320 | 315-0753-00 | | | RES,FXD,FILM:75K OHM,5%,0.25W | 80009 | 315-0753-00 |
| A2A1R334 | 315-0430-00 | | | RES,FXD,FILM:43 OHM,5%,0.25W | 80009 | 315-0430-00 |
| A2A1R335 | 315-0391-00 | | | RES,FXD,FILM:390 OHM,5%,0.25W | 80009 | 315-0391-00 |
| A2A1R336 | 315-0430-00 | | | RES,FXD,FILM:43 OHM,5%,0.25W | 80009 | 315-0430-00 |
| A2A1R337 | 315-0391-00 | | | RES,FXD,FILM:390 OHM,5%,0.25W | 80009 | 315-0391-00 |
| A2A1R338 | 315-0430-00 | | | RES,FXD,FILM:43 OHM,5%,0.25W | 80009 | 315-0430-00 |
| A2A1R339 | 315-0431-00 | | | RES,FXD,FILM:430 OHM,5%,0.25W | 80009 | 315-0431-00 |
| A2A1R355 | 315-0511-00 | | | RES,FXD,FILM:510 OHM,5%,0.25W | 80009 | 315-0511-00 |
| A2A1R356 | 315-0331-00 | | | RES,FXD,FILM:330 OHM,5%,0.25W | 80009 | 315-0331-00 |
| A2A1R366 | 307-1318-00 | | | RES NTWK,FXD,FI:(2) 162 OHM,(2) 260 OHM,2%, 0.125W | 80009 | 307-1318-00 |
| A2A1R368 | 307-0503-00 | | | RES NTWK,FXD,FI:(9) 510 OHM,20%,0.125W | 91637 | CSC10A01511GD03 |
| A2A1R376 | 307-1318-00 | | | RES NTWK,FXD,FI:(2) 162 OHM,(2) 260 OHM,2%, 0.125W | 80009 | 307-1318-00 |
| A2A1R416 | 322-3289-00 | | | RES,FXD:METAL FILM;10K OHM,1%,0.2W,TC=100 PPM;AXIAL,T&R,SMALL BODY | 80009 | 322-3289-00 |
| A2A1R418 | 322-3297-00 | | | RES,FXD:METAL FILM;12.1K OHM,1%,0.2W,TC=100 PPM;AXIAL,T&R,SMALL BODY | 57668 | CRB20 FXE 12K1 |
| A2A1R424 | 322-3258-00 | | | RES,FXD:METAL FILM;4.75K OHM,1%,0.2W,TC=100 PPM;AXIAL,T&R,SMALL BODY | 80009 | 322-3258-00 |
| A2A1R425 | 322-3289-00 | | | RES,FXD:METAL FILM;10K OHM,1%,0.2W,TC=100 PPM;AXIAL,T&R,SMALL BODY | 80009 | 322-3289-00 |
| A2A1R426 | 315-0244-00 | | | RES,FXD,FILM:240K OHM,5%,0.25W | 80009 | 315-0244-00 |
| A2A1R427 | 315-0104-00 | | | RES,FXD,FILM:100K OHM,5%,0.25W | 80009 | 315-0104-00 |
| A2A1R432 | 315-0153-00 | | | RES,FXD,FILM:15K OHM,5%,0.25W | 80009 | 315-0153-00 |
| A2A1R442 | 307-0526-00 | | | RES,NTWK:THICK FILM;(5)510 OHM,10%,0.125W EACH,TC=100 PPM;SIP6,PIN 1 COMMON | 57924 | 4306X-101-511 |
| A2A1R452 | 315-0271-00 | | | RES,FXD,FILM:270 OHM,5%,0.25W | 80009 | 315-0271-00 |
| A2A1R453 | 307-1318-00 | | | RES NTWK,FXD,FI:(2) 162 OHM,(2) 260 OHM,2%, 0.125W | 80009 | 307-1318-00 |
| A2A1R458 | 307-1318-00 | | | RES NTWK,FXD,FI:(2) 162 OHM,(2) 260 OHM,2%, 0.125W | 80009 | 307-1318-00 |
| A2A1R462 | 315-0101-00 | | | RES,FXD,FILM:100 OHM,5%,0.25W | 80009 | 315-0101-00 |
| A2A1R465 | 307-1318-00 | | | RES NTWK,FXD,FI:(2) 162 OHM,(2) 260 OHM,2%, 0.125W | 80009 | 307-1318-00 |
| A2A1R473 | 315-0511-00 | | | RES,FXD,FILM:510 OHM,5%,0.25W | 80009 | 315-0511-00 |
| A2A1R475 | 315-0102-00 | | | RES,FXD,FILM:1K OHM,5%,0.25W | 80009 | 315-0102-00 |
| A2A1R488 | 307-1412-00 | | | RES NTWK,FXD,FI:560 OHM,6 PIN,2%,0.30W | 91637 | CSC06A-01-561G |
| A2A1R489 | 307-1413-00 | | | RES NTWK,FXD,FI:1.2K OHM,6 PIN,2%,0.30W | 91637 | CSC06A-01-122G |
| A2A1R499 | 307-1411-00 | | | RES NTWK,FXD,FI:(5)470 OHM,10 PIN,2%,0.50W | 91637 | |
| A2A1R516 | 315-0123-00 | | | RES,FXD,FILM:12K OHM,5%,0.25W | 80009 | 315-0123-00 |
| A2A1R520 | 321-0413-00 | | | RES,FXD,FILM:196K OHM,1%,0.125W,TC=T0 | 07716 | CEAD19602F |
| A2A1R521 | 322-3342-00 | | | RES,FXD,FILM:35.7K OHM,1%,0.2W,TC=T0 | 57668 | CRB20 FXE 35K7 |
| A2A1R522 | 322-3289-00 | | | RES,FXD:METAL FILM;10K OHM,1%,0.2W,TC=100 PPM;AXIAL,T&R,SMALL BODY | 80009 | 322-3289-00 |
| A2A1R523 | 315-0122-00 | | | RES,FXD,FILM:1.2K OHM,5%,0.25W | 80009 | 315-0122-00 |
| A2A1R524 | 315-0362-00 | | | RES,FXD,FILM:3.6K OHM,5%,0.25W | 80009 | 315-0362-00 |

| Component No. | Tektronix Part No. | Serial/Assembly No. Effective | Dscont | Name & Description | Mfr. Code | Mfr. Part No. |
|---|---|---|---|---|---|---|
| A2A1R525 | 315-0103-00 | | | RES,FXD,FILM:10K OHM,5%,0.25W | 80009 | 315-0103-00 |
| A2A1R526 | 315-0512-00 | | | RES,FXD,FILM:5.1K OHM,5%,0.25W | 80009 | 315-0512-00 |
| A2A1R527 | 315-0243-00 | | | RES,FXD,FILM:24K OHM,5%,0.25W | 80009 | 315-0243-00 |
| A2A1R528 | 315-0623-00 | | | RES,FXD,FILM:62K OHM,5%,0.25W | 80009 | 315-0623-00 |
| A2A1R531 | 322-3126-00 | | | RES,FXD,FILM:200 OHM,1%,0.2W,TC=T0 | 80009 | 322-3126-00 |
| A2A1R532 | 315-0103-00 | | | RES,FXD,FILM:10K OHM,5%,0.25W | 80009 | 315-0103-00 |
| A2A1R533 | 315-0243-00 | | | RES,FXD,FILM:24K OHM,5%,0.25W | 80009 | 315-0243-00 |
| A2A1R534 | 315-0362-00 | | | RES,FXD,FILM:3.6K OHM,5%,0.25W | 80009 | 315-0362-00 |
| A2A1R535 | 315-0122-00 | | | RES,FXD,FILM:1.2K OHM,5%,0.25W | 80009 | 315-0122-00 |
| A2A1R536 | 322-3097-00 | | | RES,FXD:METAL FILM;100 OHM,1%,0.2W,TC=100 PPM;AXIAL,T&R,SMALL BODY | 57668 | CRB20 FXE 100E |
| A2A1R537 | 322-3097-00 | | | RES,FXD:METAL FILM;100 OHM,1%,0.2W,TC=100 PPM;AXIAL,T&R,SMALL BODY | 57668 | CRB20 FXE 100E |
| A2A1R538 | 315-0101-00 | | | RES,FXD,FILM:100 OHM,5%,0.25W | 80009 | 315-0101-00 |
| A2A1R544 | 315-0102-00 | | | RES,FXD,FILM:1K OHM,5%,0.25W | 80009 | 315-0102-00 |
| A2A1R549 | 315-0103-00 | | | RES,FXD,FILM:10K OHM,5%,0.25W | 80009 | 315-0103-00 |
| A2A1R552 | 315-0332-00 | | | RES,FXD,FILM:3.3K OHM,5%,0.25W | 80009 | 315-0332-00 |
| A2A1R554 | 307-0526-00 | | | RES,NTWK:THICK FILM;(5)510 OHM,10%,0.125W EACH,TC=100 PPM;SIP6,PIN 1 COMMON | 57924 | 4306X-101-511 |
| A2A1R574 | 315-0222-00 | | | RES,FXD,FILM:2.2K OHM,5%,0.25W | 80009 | 315-0222-00 |
| A2A1R586 | 315-0102-00 | | | RES,FXD,FILM:1K OHM,5%,0.25W | 80009 | 315-0102-00 |
| A2A1R625 | 315-0270-00 | | | RES,FXD,FILM:27 OHM,5%,0.25W | 80009 | 315-0270-00 |
| A2A1R631 | 315-0163-00 | | | RES,FXD,FILM:16K OHM,5%,0.25W | 80009 | 315-0163-00 |
| A2A1R635 | 322-3469-00 | | | RES,FXD,FILM:750K OHM,1%,0.2W,TC=T0 | 80009 | 322-3469-00 |
| A2A1R636 | 315-0562-00 | | | RES,FXD,FILM:5.6K OHM,5%,0.25W | 80009 | 315-0562-00 |
| A2A1R637 | 315-0473-00 | | | RES,FXD,FILM:47K OHM,5%,0.25W | 80009 | 315-0473-00 |
| A2A1R642 | 315-0512-00 | 671-0105-01 | 671-0105-02 | RES,FXD,FILM:5.1K OHM,5%,0.25W | 80009 | 315-0512-00 |
| A2A1R642 | 315-0101-00 | 671-0105-03 | | RES,FXD,FILM:100 OHM,5%,0.25W | 80009 | 315-0101-00 |
| A2A1R643 | 315-0103-00 | | | RES,FXD,FILM:10K OHM,5%,0.25W | 80009 | 315-0103-00 |
| A2A1R647 | 315-0202-00 | | | RES,FXD,FILM:2K OHM,5%,0.25W | 80009 | 315-0202-00 |
| A2A1R648 | 315-0820-00 | | | RES,FXD,FILM:82 OHM,5%,0.25W | 80009 | 315-0820-00 |
| A2A1R649 | 322-3273-00 | | | RES,FXD:METAL FILM;6.81K OHM,1%,0.2W,TC=100 PPM;AXIAL,T&R,SMALL BODY | 80009 | 322-3273-00 |
| A2A1R672 | 315-0103-00 | | | RES,FXD,FILM:10K OHM,5%,0.25W | 80009 | 315-0103-00 |
| A2A1R712 | 315-0272-00 | | | RES,FXD,FILM:2.7K OHM,5%,0.25W | 80009 | 315-0272-00 |
| A2A1R733 | 311-0644-00 | | | RES,VAR,NONWW:TRMR,20K OHM,0.5W | 80009 | 311-0644-00 |
| A2A1R744 | 311-1879-00 | | | RES,VAR,NONWW:TRMR,20K OHM,0.5W | 32997 | 3299W-1-203 |
| A2A1R764 | 307-1175-00 | | | RES NTWK,FXD,FI:2.2K OHM,2% | 80009 | 307-1175-00 |
| A2A1R833 | 301-0120-00 | | | RES,FXD,FILM:12 OHM,5%,0.5W | 80009 | 301-0120-00 |
| A2A1R839 | 301-0330-00 | | | RES,FXD,FILM:33 OHM,5%,0.5W | 19701 | 5053CX33R00J |
| A2A1TP145 | 214-4085-00 | | | TERM,TEST POINT:0.070 ID,0.220 H,0.063 DIA PCB,0.015 X 0.032 BRASS,W/ RED NYLON COLLAR | 26364 | 104-01-02 |
| A2A1TP182 | 214-4085-00 | | | TERM,TEST POINT:0.070 ID,0.220 H,0.063 DIA PCB,0.015 X 0.032 BRASS,W/ RED NYLON COLLAR | 26364 | 104-01-02 |
| A2A1TP322 | 214-4085-00 | | | TERM,TEST POINT:0.070 ID,0.220 H,0.063 DIA PCB,0.015 X 0.032 BRASS,W/ RED NYLON COLLAR | 26364 | 104-01-02 |
| A2A1TP324 | 214-4085-00 | | | TERM,TEST POINT:0.070 ID,0.220 H,0.063 DIA PCB,0.015 X 0.032 BRASS,W/ RED NYLON COLLAR | 26364 | 104-01-02 |
| A2A1TP342 | 214-4085-00 | | | TERM,TEST POINT:0.070 ID,0.220 H,0.063 DIA PCB,0.015 X 0.032 BRASS,W/ RED NYLON COLLAR | 26364 | 104-01-02 |
| A2A1TP434 | 214-4085-00 | | | TERM,TEST POINT:0.070 ID,0.220 H,0.063 DIA PCB,0.015 X 0.032 BRASS,W/ RED NYLON COLLAR | 26364 | 104-01-02 |
| A2A1TP439 | 214-4085-00 | | | TERM,TEST POINT:0.070 ID,0.220 H,0.063 DIA PCB,0.015 X 0.032 BRASS,W/ RED NYLON COLLAR | 26364 | 104-01-02 |
| A2A1TP444 | 214-4085-00 | | | TERM,TEST POINT:0.070 ID,0.220 H,0.063 DIA PCB,0.015 X 0.032 BRASS,W/ RED NYLON COLLAR | 26364 | 104-01-02 |
| A2A1TP514 | 214-4085-00 | | | TERM,TEST POINT:0.070 ID,0.220 H,0.063 DIA PCB,0.015 X 0.032 BRASS,W/ RED NYLON COLLAR | 26364 | 104-01-02 |

| Component No. | Tektronix Part No. | Serial/Assembly No. Effective | Dscont | Name & Description | Mfr. Code | Mfr. Part No. |
|---|---|---|---|---|---|---|
| A2A1TP523 | 214-4085-00 | | | TERM,TEST POINT:0.070 ID,0.220 H,0.063 DIA PCB,0.015 X 0.032 BRASS,W/ RED NYLON COLLAR | 26364 | 104-01-02 |
| A2A1TP562 | 214-4085-00 | | | TERM,TEST POINT:0.070 ID,0.220 H,0.063 DIA PCB,0.015 X 0.032 BRASS,W/ RED NYLON COLLAR | 26364 | 104-01-02 |
| A2A1TP614 | 214-4085-00 | | | TERM,TEST POINT:0.070 ID,0.220 H,0.063 DIA PCB,0.015 X 0.032 BRASS,W/ RED NYLON COLLAR | 26364 | 104-01-02 |
| A2A1TP622 | 136-0352-00 | | | SOCKET,PIN TERM: | 80009 | 136-0352-00 |
| A2A1TP735 | 136-0352-00 | | | SOCKET,PIN TERM: | 80009 | 136-0352-00 |
| A2A1TP812 | 214-4085-00 | | | TERM,TEST POINT:0.070 ID,0.220 H,0.063 DIA PCB,0.015 X 0.032 BRASS,W/ RED NYLON COLLAR | 26364 | 104-01-02 |
| A2A1TP814 | 214-4085-00 | | | TERM,TEST POINT:0.070 ID,0.220 H,0.063 DIA PCB,0.015 X 0.032 BRASS,W/ RED NYLON COLLAR | 26364 | 104-01-02 |
| A2A1TP816 | 214-4085-00 | | | TERM,TEST POINT:0.070 ID,0.220 H,0.063 DIA PCB,0.015 X 0.032 BRASS,W/ RED NYLON COLLAR | 26364 | 104-01-02 |
| A2A1TP818 | 214-4085-00 | | | TERM,TEST POINT:0.070 ID,0.220 H,0.063 DIA PCB,0.015 X 0.032 BRASS,W/ RED NYLON COLLAR | 26364 | 104-01-02 |
| A2A1TP822 | 214-4085-00 | | | TERM,TEST POINT:0.070 ID,0.220 H,0.063 DIA PCB,0.015 X 0.032 BRASS,W/ RED NYLON COLLAR | 26364 | 104-01-02 |
| A2A1TP913 | 214-4085-00 | | | TERM,TEST POINT:0.070 ID,0.220 H,0.063 DIA PCB,0.015 X 0.032 BRASS,W/ RED NYLON COLLAR | 26364 | 104-01-02 |
| A2A1TP917 | 214-4085-00 | | | TERM,TEST POINT:0.070 ID,0.220 H,0.063 DIA PCB,0.015 X 0.032 BRASS,W/ RED NYLON COLLAR | 26364 | 104-01-02 |
| A2A1TP924 | 214-4085-00 | | | TERM,TEST POINT:0.070 ID,0.220 H,0.063 DIA PCB,0.015 X 0.032 BRASS,W/ RED NYLON COLLAR | 26364 | 104-01-02 |
| A2A1TP926 | 214-4085-00 | | | TERM,TEST POINT:0.070 ID,0.220 H,0.063 DIA PCB,0.015 X 0.032 BRASS,W/ RED NYLON COLLAR | 26364 | 104-01-02 |
| A2A1U242 | 156-1640-00 | | | IC,DIGITAL:ECL,RECEIVER;TRIPLE LINE;10H116, DIP16.3,TUBE | 80009 | 156-1640-00 |
| A2A1U252 | 156-0230-02 | | | IC,DIGITAL:ECL,FLIP FLOP;DUAL D-TYPE MASTER SLAVE;10131,DIP16.3,TUBE,CER PACK | 80009 | 156-0230-02 |
| A2A1U264 | 160-4624-00 | | | IC,DIGITAL:ECL,PLD;PAL,10H20P8,6NS,210MA,PRGM 156-3579-00;10H20P8,DIP24.3,TUBE | 80009 | 160-4624-00 |
| | | | | *MOUNTING PARTS* | | |
| | 136-0925-00 | | | SOCKET,DIP:: | 91506 | 224-AG30D |
| | | | | *END MOUNTING PARTS* | | |
| A2A1U276 | 156-0956-02 | | | IC,DIGITAL:LSTTL,BUFFER/DRIVER;DUPLICATE OF 156-0956-00;74LS244,DIP20.3,TUBE | 80009 | 156-0956-02 |
| A2A1U278 | 156-0368-03 | | | IC,DIGITAL:ECL,TRANSLATOR;QUAD TTL-TO-ECL;10124,DIP16.3,TUBE | 80009 | 156-0368-03 |
| A2A1U288 | 156-0368-03 | | | IC,DIGITAL:ECL,TRANSLATOR;QUAD TTL-TO-ECL;10124,DIP16.3,TUBE | 80009 | 156-0368-03 |
| A2A1U292 | 156-2044-00 | | | IC,DIGITAL:LSTTL,BUS TRANSCEIVER;OCTAL, NON INV, 3-STATE;74LS652,DIP24.3,TUBE,SCRN | 01295 | SN74LS652NTR3. |
| A2A1U366 | 156-0641-01 | | | IC,DIGITAL:ECL,COUNTER;UNIVERSAL HEXADECIMAL;10136,DIP16.3,TUBE | 80009 | 156-0641-01 |
| A2A1U376 | 156-0316-04 | | | IC,DIGITAL:ECL,TRANSLATOR;QUAD ECL TO TTL;10125,DIP16.3,TUBE | 04713 | MC10125P/L |
| A2A1U394 | 160-5127-00 | | | MICROCKT,DGTL:OCTAL 16 INP,PRGM | 80009 | 160-5127-00 |
| | | | | *MOUNTING PARTS* | | |
| | 136-0752-00 | | | SKT,PL-IN ELEK:MICROCIRCUIT,20 DIP | 09922 | DILB20P-108 |
| | | | | *END MOUNTING PARTS* | | |
| A2A1U418 | 156-1191-01 | | | IC,LINEAR:BIFET,OP-AMP;6MV VOS;TL072ACP,DIP08.3 | 80009 | 156-1191-01 |
| A2A1U436 | 156-0048-00 | | | IC,LINEAR: | 80009 | 156-0048-00 |
| A2A1U446 | 156-0230-02 | | | IC,DIGITAL:ECL,FLIP FLOP;DUAL D-TYPE MASTER SLAVE;10131,DIP16.3,TUBE,CER PACK | 80009 | 156-0230-02 |
| A2A1U455 | 156-1640-00 | | | IC,DIGITAL:ECL,RECEIVER;TRIPLE LINE;10H116, DIP16.3,TUBE | 80009 | 156-1640-00 |
| A2A1U466 | 156-0641-01 | | | IC,DIGITAL:ECL,COUNTER;UNIVERSAL HEXADECIMAL;10136,DIP16.3,TUBE | 80009 | 156-0641-01 |

| Component No. | Tektronix Part No. | Serial/Assembly No. Effective | Dscont | Name & Description | Mfr. Code | Mfr. Part No. |
|---|---|---|---|---|---|---|
| A2A1U485 | 160-5126-00 | | | MICROCKT,DGTL:LOW PWR PRGM ARRAY LOGIC,PRGM | 80009 | 160-5126-00 |
| | | | | *MOUNTING PARTS* | | |
| | 136-0752-00 | | | SKT,PL-IN ELEK:MICROCIRCUIT,20 DIP | 09922 | DILB20P-108 |
| | | | | *END MOUNTING PARTS* | | |
| A2A1U518 | 156-1225-00 | | | IC,LINEAR:BIPOLAR,COMPARATOR;DUAL,OPEN COLL ECTOR,300NS;LM393N,DIP08.3 | 01295 | LM393P |
| A2A1U546 | 156-0368-03 | | | IC,DIGITAL:ECL,TRANSLATOR;QUAD TTL-TO-ECL;1 0124,DIP16.3,TUBE | 80009 | 156-0368-03 |
| A2A1U552 | 156-0733-02 | | | IC,DIGITAL:LSTTL,MULTIVIBRATOR;DUPLICATE OF 156-0733-00;74LS221,DIP16.3,TUBE | 80009 | 156-0733-02 |
| A2A1U558 | 156-0205-02 | | | IC,DIGITAL:ECL,GATE;QUAD 2-INPUT OR;10102,D IP16.3,TUBE | 80009 | 156-0205-02 |
| A2A1U584 | 160-5562-01 | | | MICROCKT,DGTL:STTL,OCTAL 16 INP RGTR,PRGM | 80009 | 160-5562-01 |
| | | | | *MOUNTING PARTS* | | |
| | 136-0752-00 | | | SKT,PL-IN ELEK:MICROCIRCUIT,20 DIP | 09922 | DILB20P-108 |
| | | | | *END MOUNTING PARTS* | | |
| A2A1U588 | 160-5133-00 | | | MICROCKT,DGTL:CMOS,512 X 8 RGTR PROM,PRGM | 80009 | 160-5133-00 |
| | | | | *MOUNTING PARTS* | | |
| | 136-0925-00 | | | SOCKET,DIP:: | 91506 | 224-AG30D |
| | | | | *END MOUNTING PARTS* | | |
| A2A1U627 | 155-0144-01 | | | MICROCKT,LINEAR:16 LEAD DUAL IN INLINE TV | 80009 | 155-0144-01 |
| | | | | *MOUNTING PARTS* | | |
| | 136-0729-00 | | | SOCKET,DIP:PCB,;FEMALE,STR,2 X 8,16 POS,0.1 X 0.3 CTR,0.175 H X 0.130 TAIL,BECU,TIN | 09922 | DILB16P-108T |
| | | | | *END MOUNTING PARTS* | | |
| A2A1U656 | 160-5134-00 | | | MICROCKT,DGTL:CMOS,512 X 8 RGTR PROM,PRGM | 80009 | 160-5134-00 |
| | | | | *MOUNTING PARTS* | | |
| | 136-0925-00 | | | SOCKET,DIP:: | 91506 | 224-AG30D |
| | | | | *END MOUNTING PARTS* | | |
| A2A1U675 | 160-5132-00 | | | MICROCKT,DGTL:CMOS,2048 X 8 RGTR PROM,PRGM | 80009 | 160-5132-00 |
| | | | | *MOUNTING PARTS* | | |
| | 136-0925-00 | | | SOCKET,DIP:: | 91506 | 224-AG30D |
| | | | | *END MOUNTING PARTS* | | |
| A2A1U686 | 160-5135-00 | | | MICROCKT,DGTL:CMOS,512 X 8 RGTR PROM,PRGM | 80009 | 160-5135-00 |
| | | | | *MOUNTING PARTS* | | |
| | 136-0925-00 | | | SOCKET,DIP:: | 91506 | 224-AG30D |
| | | | | *END MOUNTING PARTS* | | |
| A2A1U726 | 156-0515-03 | | | IC,MISC:CMOS,ANALOG MUX;TRIPLE SPDT;4053,DI P16.3,TUBE | 80009 | 156-0515-03 |
| A2A1U758 | 160-5565-00 | | | MICROCKT,DGTL:CMOS,8192 X 8 PROM,PRGM | 80009 | 160-5565-00 |
| | | | | *MOUNTING PARTS* | | |
| | 136-0925-00 | | | SOCKET,DIP:: | 91506 | 224-AG30D |
| | | | | *END MOUNTING PARTS* | | |
| A2A1U777 | 160-5563-00 | | | MICROCKT,DGTL:ARRAY LOGIC MICRO DEVICE,PRGM | 80009 | 160-5563-00 |
| | | | | *MOUNTING PARTS* | | |
| | 136-0925-00 | | | SOCKET,DIP:: | 91506 | 224-AG30D |
| | | | | *END MOUNTING PARTS* | | |
| A2A1U784 | 160-5561-00 | | | MICROCKT,DGTL:STTL,OCTAL 16 INP RGTR,PRGM | 80009 | 160-5561-00 |
| | | | | *MOUNTING PARTS* | | |
| | 136-0752-00 | | | SKT,PL-IN ELEK:MICROCIRCUIT,20 DIP | 09922 | DILB20P-108 |
| | | | | *END MOUNTING PARTS* | | |
| A2A1U824 | 156-1160-00 | | | IC,LINEAR:BIPOLAR,VOLTAGE REGULATOR;POSITIV E,12V,100MA,4%;LM78L12ACH,TO-39 | 80009 | 156-1160-00 |
| A2A1U828 | 156-0991-00 | | | IC,LINEAR:BIPOLAR,VOLTAGE REGULATOR;POSITIV E,5.0V,100MA,5%;MC78L05ACP,TO-92 | 80009 | 156-0991-00 |
| A2A1U922 | 156-1207-00 | | | IC,LINEAR:BIPOLAR,VOLTAGE REGULATOR;NEGATIV E,-12V,500MA,3%;LM320H-12,TO-39 | 80009 | 156-1207-00 |
| A2A1U949 | 156-0655-01 | | | IC,LINEAR: | 01295 | UA7952CKC3 |
| | | | | *MOUNTING PARTS* | | |
| | 210-0586-00 | | | NUT,PL,ASSEM WA:4-40 X 0.25,STL CD PL | 78189 | 211-041800-00 |
| | 211-0008-00 | | | SCREW,MACHINE:4-40 X 0.25,PNH,STL | 93907 | ORDER BY DESCR |
| | | | | *END MOUNTING PARTS* | | |

| Component No. | Tektronix Part No. | Serial/Assembly No. Effective | Dscont | Name & Description | Mfr. Code | Mfr. Part No. |
|---|---|---|---|---|---|---|
| A2A1Y746 | 119-2626-01 | | | OSCILLATOR,RF: | 14301 | 012-405-02181 |

| Component No. | Tektronix Part No. | Serial/Assembly No. Effective | Dscont | Name & Description | Mfr. Code | Mfr. Part No. |
|---|---|---|---|---|---|---|
| A2A1A1 | 671-0562-00 | | | CIRCUIT BD ASSY:GENLOCK VCO,PAL | 80009 | 671-0562-00 |
| | | | | *ATTACHED PARTS* | | |
| - | 337-3415-00 | | | SHIELD,ELEC:GENLOCK | 80009 | 337-3415-00 |
| | | | | *END ATTACHED PARTS* | | |
| A2A1A1C1 | 283-5003-00 | | | CAP,FXD,CER DI:0.01UF,10%,50V | 80009 | 283-5003-00 |
| A2A1A1C2 | 283-5011-00 | | | CAP,FXD,CER DI:33PF,5%,50V | 95275 | VJ1206A330JXA |
| A2A1A1C3 | 283-5011-00 | | | CAP,FXD,CER DI:33PF,5%,50V | 95275 | VJ1206A330JXA |
| A2A1A1C4 | 283-5000-00 | | | CAP,FXD,CER DI:10PF,5%,50V | 80009 | 283-5000-00 |
| A2A1A1C5 | 281-0165-00 | | | CAP,VAR,AIR DI:0.8-10PF,250V | 80009 | 281-0165-00 |
| A2A1A1C6 | 283-5014-00 | | | CAP,FXD,CER DI:330PF,5%,50V | 80009 | 283-5014-00 |
| A2A1A1C7 | 283-5014-00 | | | CAP,FXD,CER DI:330PF,5%,50V | 80009 | 283-5014-00 |
| A2A1A1C8 | 283-5004-00 | | | CAP,FXD,CER DI:0.1UF,10%,25V | 80009 | 283-5004-00 |
| A2A1A1C9 | 283-5000-00 | | | CAP,FXD,CER DI:10PF,5%,50V | 80009 | 283-5000-00 |
| A2A1A1C10 | 283-5004-00 | | | CAP,FXD,CER DI:0.1UF,10%,25V | 80009 | 283-5004-00 |
| A2A1A1C11 | 283-5004-00 | | | CAP,FXD,CER DI:0.1UF,10%,25V | 80009 | 283-5004-00 |
| A2A1A1C12 | 283-5011-00 | | | CAP,FXD,CER DI:33PF,5%,50V | 95275 | VJ1206A330JXA |
| A2A1A1CR1 | 152-5010-00 | | | DIODE,SIG:,VVC;30V,29PF,C3/25=5.75;MMBV109L ,SOT-23,8MM TR | 80009 | 152-5010-00 |
| A2A1A1L1 | 108-5072-00 | | | COIL,RF:FXD,1UH,5%,Q=33, SRF 290 MHZ, DCR 1 .75 OHM,I MAX 460 | 02113 | 1008CS-102-XJ2A |
| A2A1A1L2 | 108-5005-00 | | | COIL,RF: | 80009 | 108-5005-00 |
| A2A1A1P320 | 131-1426-00 | | | CONN,HDR:PCB,;MALE,RTANG,1 X 36,0.1 CTR,0.2 3 MLG X 0.195 TAIL,GOLD,STACKABLE;,, | 22526 | 65524-136 |
| A2A1A1Q1 | 151-5011-00 | | | TRANSISTOR,SIG:BIPOLAR,NPN;12V,50MA,900MHZ, AMPLIFIER;MMBR5179L,TO-236/SOT-23,8MM T&R | 80009 | 151-5011-00 |
| A2A1A1Q2 | 151-5011-00 | | | TRANSISTOR,SIG:BIPOLAR,NPN;12V,50MA,900MHZ, AMPLIFIER;MMBR5179L,TO-236/SOT-23,8MM T&R | 80009 | 151-5011-00 |
| A2A1A1R1 | 321-5030-00 | | | RES,FXD:METAL FILM;10.0K OHM,1%,0.125W,TC=1 00 PPM;1206,T&R | 80009 | 321-5030-00 |
| A2A1A1R2 | 321-5030-00 | | | RES,FXD:METAL FILM;10.0K OHM,1%,0.125W,TC=1 00 PPM;1206,T&R | 80009 | 321-5030-00 |
| A2A1A1R3 | 321-5030-00 | | | RES,FXD:METAL FILM;10.0K OHM,1%,0.125W,TC=1 00 PPM;1206,T&R | 80009 | 321-5030-00 |
| A2A1A1R4 | 321-5030-00 | | | RES,FXD:METAL FILM;10.0K OHM,1%,0.125W,TC=1 00 PPM;1206,T&R | 80009 | 321-5030-00 |
| A2A1A1R5 | 321-5043-00 | | | RES,FXD:METAL FILM;47.5 OHM,1%,0.125W,TC=10 0 PPM;1206,T&R | 80009 | 321-5043-00 |
| A2A1A1R6 | 321-5017-00 | | | RES,FXD:METAL FILM;825 OHM,1%,0.125W,TC=100 PPM;1206,T&R | 80009 | 321-5017-00 |
| A2A1A1R7 | 321-5017-00 | | | RES,FXD:METAL FILM;825 OHM,1%,0.125W,TC=100 PPM;1206,T&R | 80009 | 321-5017-00 |
| A2A1A1R8 | 321-5030-00 | | | RES,FXD:METAL FILM;10.0K OHM,1%,0.125W,TC=1 00 PPM;1206,T&R | 80009 | 321-5030-00 |
| A2A1A1R9 | 321-5043-00 | | | RES,FXD:METAL FILM;47.5 OHM,1%,0.125W,TC=10 0 PPM;1206,T&R | 80009 | 321-5043-00 |

| Component No. | Tektronix Part No. | Serial/Assembly No. Effective | Dscont | Name & Description | Mfr. Code | Mfr. Part No. |
|---|---|---|---|---|---|---|
| A2A1A2 | 671-0563-00 | | | CIRCUIT BD ASSY:GENLOCK VCO,NTSC | 80009 | 671-0563-00 |
| | | | | *ATTACHED PARTS* | | |
| | 337-3415-00 | | | SHIELD,ELEC:GENLOCK | 80009 | 337-3415-00 |
| | | | | *END ATTACHED PARTS* | | |
| A2A1A2C1 | 283-5003-00 | | | CAP,FXD,CER DI:0.01UF,10%,50V | 80009 | 283-5003-00 |
| A2A1A2C2 | 283-5001-00 | | | CAP,FXD,CER DI:100PF,5%,50V | 80009 | 283-5001-00 |
| A2A1A2C4 | 283-5011-00 | | | CAP,FXD,CER DI:33PF,5%,50V | 95275 | VJ1206A330JXA |
| A2A1A2C5 | 281-0165-00 | | | CAP,VAR,AIR DI:0.8-10PF,250V | 80009 | 281-0165-00 |
| A2A1A2C6 | 283-5014-00 | | | CAP,FXD,CER DI:330PF,5%,50V | 80009 | 283-5014-00 |
| A2A1A2C7 | 283-5014-00 | | | CAP,FXD,CER DI:330PF,5%,50V | 80009 | 283-5014-00 |
| A2A1A2C8 | 283-5004-00 | | | CAP,FXD,CER DI:0.1UF,10%,25V | 80009 | 283-5004-00 |
| A2A1A2C9 | 283-5009-00 | | | CAP,FXD,CER DI:15PF,5%,50V | 54583 | C3216C0G1H150J |
| A2A1A2C10 | 283-5004-00 | | | CAP,FXD,CER DI:0.1UF,10%,25V | 80009 | 283-5004-00 |
| A2A1A2C11 | 283-5004-00 | | | CAP,FXD,CER DI:0.1UF,10%,25V | 80009 | 283-5004-00 |
| A2A1A2C12 | 283-5011-00 | | | CAP,FXD,CER DI:33PF,5%,50V | 95275 | VJ1206A330JXA |
| A2A1A2C13 | 283-5000-00 | | | CAP,FXD,CER DI:10PF,5%,50V | 80009 | 283-5000-00 |
| A2A1A2CR1 | 152-5010-00 | | | DIODE,SIG:,VVC;30V,29PF,C3/25=5.75;MMBV109L ,SOT-23,8MM TR | 80009 | 152-5010-00 |
| A2A1A2L1 | 108-5072-00 | | | COIL,RF:FXD,1UH,5%,Q=33, SRF 290 MHZ, DCR 1 .75 OHM,I MAX 460 | 02113 | 1008CS-102-XJ2A |
| A2A1A2L2 | 108-5005-00 | | | COIL,RF: | 80009 | 108-5005-00 |
| A2A1A2P120 | 131-1426-00 | | | CONN,HDR:PCB,;MALE,RTANG,1 X 36,0.1 CTR,0.2 3 MLG X 0.195 TAIL,GOLD,STACKABLE;,, | 22526 | 65524-136 |
| A2A1A2Q1 | 151-5011-00 | | | TRANSISTOR,SIG:BIPOLAR,NPN;12V,50MA,900MHZ, AMPLIFIER;MMBR5179L,TO-236/SOT-23,8MM T&R | 80009 | 151-5011-00 |
| A2A1A2Q2 | 151-5011-00 | | | TRANSISTOR,SIG:BIPOLAR,NPN;12V,50MA,900MHZ, AMPLIFIER;MMBR5179L,TO-236/SOT-23,8MM T&R | 80009 | 151-5011-00 |
| A2A1A2R1 | 321-5030-00 | | | RES,FXD:METAL FILM;10.0K OHM,1%,0.125W,TC=1 00 PPM;1206,T&R | 80009 | 321-5030-00 |
| A2A1A2R2 | 321-5030-00 | | | RES,FXD:METAL FILM;10.0K OHM,1%,0.125W,TC=1 00 PPM;1206,T&R | 80009 | 321-5030-00 |
| A2A1A2R3 | 321-5030-00 | | | RES,FXD:METAL FILM;10.0K OHM,1%,0.125W,TC=1 00 PPM;1206,T&R | 80009 | 321-5030-00 |
| A2A1A2R4 | 321-5030-00 | | | RES,FXD:METAL FILM;10.0K OHM,1%,0.125W,TC=1 00 PPM;1206,T&R | 80009 | 321-5030-00 |
| A2A1A2R5 | 321-5043-00 | | | RES,FXD:METAL FILM;47.5 OHM,1%,0.125W,TC=10 0 PPM;1206,T&R | 80009 | 321-5043-00 |
| A2A1A2R6 | 321-5017-00 | | | RES,FXD:METAL FILM;825 OHM,1%,0.125W,TC=100 PPM;1206,T&R | 80009 | 321-5017-00 |
| A2A1A2R7 | 321-5017-00 | | | RES,FXD:METAL FILM;825 OHM,1%,0.125W,TC=100 PPM;1206,T&R | 80009 | 321-5017-00 |
| A2A1A2R8 | 321-5030-00 | | | RES,FXD:METAL FILM;10.0K OHM,1%,0.125W,TC=1 00 PPM;1206,T&R | 80009 | 321-5030-00 |
| A2A1A2R9 | 321-5043-00 | | | RES,FXD:METAL FILM;47.5 OHM,1%,0.125W,TC=10 0 PPM;1206,T&R | 80009 | 321-5043-00 |

| Component No. | Tektronix Part No. | Serial/Assembly No. Effective | Dscont | Name & Description | Mfr. Code | Mfr. Part No. |
|---|---|---|---|---|---|---|
| A3 | 672-1296-04 | B022000 | B022013 | CIRCUIT BD ASSY:ADC | 80009 | 672-1296-04 |
| A3 | 672-1296-05 | B022014 | B023422 | CKT BD SUBASSY: | 80009 | 672-1296-05 |
| A3 | 672-1296-08 | B023423 | | CIRCUIT BD ASSY: | 80009 | 672-1296-08 |

| Component No. | Tektronix Part No. | Serial/Assembly No. Effective | Dscont | Name & Description | Mfr. Code | Mfr. Part No. |
|---|---|---|---|---|---|---|
| A3A1 | 671-0100-03 | 672-1296-04 | 672-1296-04 | CIRCUIT BD ASSY:ADC | 80009 | 671-0100-03 |
| A3A1 | 671-0100-04 | 672-1296-05 | 672-1296-05 | CIRCUIT BD ASSY:ADC | 80009 | 671-0100-04 |
| A3A1 | 671-0100-05 | 672-1296-08 | | CIRCUIT BD ASSY:ADC | 80009 | 671-0100-05 |
| A3A1C113 | 290-0943-00 | | | CAP,FXD,ELCTLT:47UF,+50-20%,25V | 55680 | UVX1V470MPA |
| A3A1C114 | 290-0572-00 | | | CAP,FXD,ELCTLT:0.1UF,20%,50V | 05397 | T368A104050AZ |
| A3A1C115 | 290-0572-00 | | | CAP,FXD,ELCTLT:0.1UF,20%,50V | 05397 | T368A104050AZ |
| A3A1C125 | 283-0353-00 | | | CAP,FXD,CER DI:0.1UF,10%,50V | 04222 | 12105C104KATBA |
| A3A1C131 | 281-0775-01 | | | CAP,FXD,CER DI:0.1UF,20%,50V | 04222 | SA105E104MAA |
| A3A1C135 | 283-0353-00 | | | CAP,FXD,CER DI:0.1UF,10%,50V | 04222 | 12105C104KATBA |
| A3A1C144 | 281-0775-01 | | | CAP,FXD,CER DI:0.1UF,20%,50V | 04222 | SA105E104MAA |
| A3A1C147 | 283-0353-00 | | | CAP,FXD,CER DI:0.1UF,10%,50V | 04222 | 12105C104KATBA |
| A3A1C166 | 281-0775-01 | | | CAP,FXD,CER DI:0.1UF,20%,50V | 04222 | SA105E104MAA |
| A3A1C186 | 281-0775-01 | | | CAP,FXD,CER DI:0.1UF,20%,50V | 04222 | SA105E104MAA |
| A3A1C219 | 281-0775-01 | | | CAP,FXD,CER DI:0.1UF,20%,50V | 04222 | SA105E104MAA |
| A3A1C224 | 283-0353-00 | | | CAP,FXD,CER DI:0.1UF,10%,50V | 04222 | 12105C104KATBA |
| A3A1C226 | 283-0353-00 | | | CAP,FXD,CER DI:0.1UF,10%,50V | 04222 | 12105C104KATBA |
| A3A1C234 | 283-0353-00 | | | CAP,FXD,CER DI:0.1UF,10%,50V | 04222 | 12105C104KATBA |
| A3A1C235 | 283-0353-00 | | | CAP,FXD,CER DI:0.1UF,10%,50V | 04222 | 12105C104KATBA |
| A3A1C236 | 283-0353-00 | | | CAP,FXD,CER DI:0.1UF,10%,50V | 04222 | 12105C104KATBA |
| A3A1C238 | 283-0353-00 | | | CAP,FXD,CER DI:0.1UF,10%,50V | 04222 | 12105C104KATBA |
| A3A1C239 | 281-0775-01 | | | CAP,FXD,CER DI:0.1UF,20%,50V | 04222 | SA105E104MAA |
| A3A1C259 | 281-0775-01 | | | CAP,FXD,CER DI:0.1UF,20%,50V | 04222 | SA105E104MAA |
| A3A1C268 | 281-0775-01 | | | CAP,FXD,CER DI:0.1UF,20%,50V | 04222 | SA105E104MAA |
| A3A1C275 | 281-0775-01 | | | CAP,FXD,CER DI:0.1UF,20%,50V | 04222 | SA105E104MAA |
| A3A1C279 | 281-0775-01 | | | CAP,FXD,CER DI:0.1UF,20%,50V | 04222 | SA105E104MAA |
| A3A1C289 | 281-0775-01 | | | CAP,FXD,CER DI:0.1UF,20%,50V | 04222 | SA105E104MAA |
| A3A1C322 | 283-0353-00 | | | CAP,FXD,CER DI:0.1UF,10%,50V | 04222 | 12105C104KATBA |
| A3A1C327 | 281-0775-01 | | | CAP,FXD,CER DI:0.1UF,20%,50V | 04222 | SA105E104MAA |
| A3A1C329 | 281-0775-01 | | | CAP,FXD,CER DI:0.1UF,20%,50V | 04222 | SA105E104MAA |
| A3A1C333 | 283-0353-00 | | | CAP,FXD,CER DI:0.1UF,10%,50V | 04222 | 12105C104KATBA |
| A3A1C337 | 281-0775-01 | | | CAP,FXD,CER DI:0.1UF,20%,50V | 04222 | SA105E104MAA |
| A3A1C348 | 281-0775-01 | | | CAP,FXD,CER DI:0.1UF,20%,50V | 04222 | SA105E104MAA |
| A3A1C357 | 283-0220-00 | | | CAP,FXD,CER DI:0.01UF,20%,50V | 04222 | SR205C103MAA |
| A3A1C358 | 281-0775-01 | | | CAP,FXD,CER DI:0.1UF,20%,50V | 04222 | SA105E104MAA |
| A3A1C368 | 281-0775-01 | | | CAP,FXD,CER DI:0.1UF,20%,50V | 04222 | SA105E104MAA |
| A3A1C378 | 281-0775-01 | | | CAP,FXD,CER DI:0.1UF,20%,50V | 04222 | SA105E104MAA |
| A3A1C384 | 281-0775-01 | | | CAP,FXD,CER DI:0.1UF,20%,50V | 04222 | SA105E104MAA |
| A3A1C398 | 281-0775-01 | | | CAP,FXD,CER DI:0.1UF,20%,50V | 04222 | SA105E104MAA |
| A3A1C444 | 281-0775-01 | | | CAP,FXD,CER DI:0.1UF,20%,50V | 04222 | SA105E104MAA |
| A3A1C445 | 281-0775-01 | | | CAP,FXD,CER DI:0.1UF,20%,50V | 04222 | SA105E104MAA |
| A3A1C446 | 281-0775-01 | | | CAP,FXD,CER DI:0.1UF,20%,50V | 04222 | SA105E104MAA |
| A3A1C453 | 281-0775-01 | | | CAP,FXD,CER DI:0.1UF,20%,50V | 04222 | SA105E104MAA |
| A3A1C462 | 281-0775-01 | | | CAP,FXD,CER DI:0.1UF,20%,50V | 04222 | SA105E104MAA |
| A3A1C463 | 281-0775-01 | | | CAP,FXD,CER DI:0.1UF,20%,50V | 04222 | SA105E104MAA |
| A3A1C464 | 281-0775-01 | | | CAP,FXD,CER DI:0.1UF,20%,50V | 04222 | SA105E104MAA |
| A3A1C468 | 281-0775-01 | | | CAP,FXD,CER DI:0.1UF,20%,50V | 04222 | SA105E104MAA |
| A3A1C486 | 281-0775-01 | | | CAP,FXD,CER DI:0.1UF,20%,50V | 04222 | SA105E104MAA |
| A3A1C487 | 281-0775-01 | | | CAP,FXD,CER DI:0.1UF,20%,50V | 04222 | SA105E104MAA |
| A3A1C488 | 281-0775-01 | | | CAP,FXD,CER DI:0.1UF,20%,50V | 04222 | SA105E104MAA |
| A3A1C511 | 290-0943-00 | | | CAP,FXD,ELCTLT:47UF,+50-20%,25V | 55680 | UVX1V470MPA |
| A3A1C512 | 281-0722-00 | | | CAP,FXD,CER DI:7.5PF,+/-0.1PF,500V | TK1134 | 374-018-COH0759B |
| A3A1C516 | 281-0775-01 | | | CAP,FXD,CER DI:0.1UF,20%,50V | 04222 | SA105E104MAA |
| A3A1C518 | 281-0775-01 | | | CAP,FXD,CER DI:0.1UF,20%,50V | 04222 | SA105E104MAA |
| A3A1C521 | 290-0943-00 | | | CAP,FXD,ELCTLT:47UF,+50-20%,25V | 55680 | UVX1V470MPA |
| A3A1C522 | 281-0775-01 | | | CAP,FXD,CER DI:0.1UF,20%,50V | 04222 | SA105E104MAA |
| A3A1C523 | 281-0775-01 | | | CAP,FXD,CER DI:0.1UF,20%,50V | 04222 | SA105E104MAA |
| A3A1C536 | 281-0775-01 | | | CAP,FXD,CER DI:0.1UF,20%,50V | 04222 | SA105E104MAA |
| A3A1C545 | 281-0775-01 | | | CAP,FXD,CER DI:0.1UF,20%,50V | 04222 | SA105E104MAA |
| A3A1C546 | 281-0775-01 | | | CAP,FXD,CER DI:0.1UF,20%,50V | 04222 | SA105E104MAA |

| Component No. | Tektronix Part No. | Serial/Assembly No. Effective | Dscont | Name & Description | Mfr. Code | Mfr. Part No. |
|---|---|---|---|---|---|---|
| A3A1C552 | 281-0775-01 | | | CAP,FXD,CER DI:0.1UF,20%,50V | 04222 | SA105E104MAA |
| A3A1C556 | 281-0775-01 | | | CAP,FXD,CER DI:0.1UF,20%,50V | 04222 | SA105E104MAA |
| A3A1C558 | 281-0775-01 | | | CAP,FXD,CER DI:0.1UF,20%,50V | 04222 | SA105E104MAA |
| A3A1C565 | 283-0353-00 | | | CAP,FXD,CER DI:0.1UF,10%,50V | 04222 | 12105C104KATBA |
| A3A1C566 | 283-0353-00 | | | CAP,FXD,CER DI:0.1UF,10%,50V | 04222 | 12105C104KATBA |
| A3A1C567 | 281-0775-01 | | | CAP,FXD,CER DI:0.1UF,20%,50V | 04222 | SA105E104MAA |
| A3A1C568 | 281-0775-01 | | | CAP,FXD,CER DI:0.1UF,20%,50V | 04222 | SA105E104MAA |
| A3A1C572 | 281-0775-01 | | | CAP,FXD,CER DI:0.1UF,20%,50V | 04222 | SA105E104MAA |
| A3A1C573 | 283-0353-00 | | | CAP,FXD,CER DI:0.1UF,10%,50V | 04222 | 12105C104KATBA |
| A3A1C575 | 283-0353-00 | | | CAP,FXD,CER DI:0.1UF,10%,50V | 04222 | 12105C104KATBA |
| A3A1C582 | 281-0775-01 | | | CAP,FXD,CER DI:0.1UF,20%,50V | 04222 | SA105E104MAA |
| A3A1C614 | 281-0775-01 | | | CAP,FXD,CER DI:0.1UF,20%,50V | 04222 | SA105E104MAA |
| A3A1C615 | 281-0657-00 | | | CAP,FXD,CER DI:13PF,2%,500V | TK1134 | 374-018-COG0130G |
| A3A1C617 | 281-0775-01 | | | CAP,FXD,CER DI:0.1UF,20%,50V | 04222 | SA105E104MAA |
| A3A1C628 | 281-0184-00 | | | CAP,VAR,PLASTIC:2-18PF,500VDC | 80009 | 281-0184-00 |
| A3A1C637 | 281-0775-01 | | | CAP,FXD,CER DI:0.1UF,20%,50V | 04222 | SA105E104MAA |
| A3A1C638 | 281-0775-01 | | | CAP,FXD,CER DI:0.1UF,20%,50V | 04222 | SA105E104MAA |
| A3A1C647 | 281-0775-01 | | | CAP,FXD,CER DI:0.1UF,20%,50V | 04222 | SA105E104MAA |
| A3A1C648 | 281-0775-01 | | | CAP,FXD,CER DI:0.1UF,20%,50V | 04222 | SA105E104MAA |
| A3A1C657 | 281-0775-01 | | | CAP,FXD,CER DI:0.1UF,20%,50V | 04222 | SA105E104MAA |
| A3A1C662 | 283-0353-00 | | | CAP,FXD,CER DI:0.1UF,10%,50V | 04222 | 12105C104KATBA |
| A3A1C663 | 283-0353-00 | | | CAP,FXD,CER DI:0.1UF,10%,50V | 04222 | 12105C104KATBA |
| A3A1C664 | 281-0775-01 | | | CAP,FXD,CER DI:0.1UF,20%,50V | 04222 | SA105E104MAA |
| A3A1C666 | 281-0775-01 | | | CAP,FXD,CER DI:0.1UF,20%,50V | 04222 | SA105E104MAA |
| A3A1C668 | 281-0775-01 | | | CAP,FXD,CER DI:0.1UF,20%,50V | 04222 | SA105E104MAA |
| A3A1C671 | 290-0523-00 | | | CAP,FXD,ELCTLT:2.2UF,20%,20V | 80009 | 290-0523-00 |
| A3A1C672 | 290-0891-00 | 671-0100-03 | 671-0100-04 | CAP,FXD,ELCTLT:1UF,+75 -10%,50V | 24165 | 513D105M063JA4D |
| A3A1C672 | 290-0572-00 | 671-0100-05 | | CAP,FXD,ELCTLT:0.1UF,20%,50V | 05397 | T368A104050AZ |
| A3A1C674 | 283-0779-00 | | | CAP,FXD,MICA DI:27 PF,2%,500V | 80009 | 283-0779-00 |
| A3A1C677 | 281-0775-01 | | | CAP,FXD,CER DI:0.1UF,20%,50V | 04222 | SA105E104MAA |
| A3A1C678 | 283-0212-00 | | | CAP,FXD,CER DI:2UF,20%,50V | 05397 | C340C205M5U1CA |
| A3A1C679 | 290-0943-00 | | | CAP,FXD,ELCTLT:47UF,+50-20%,25V | 55680 | UVX1V470MPA |
| A3A1C681 | 281-0775-01 | | | CAP,FXD,CER DI:0.1UF,20%,50V | 04222 | SA105E104MAA |
| A3A1C685 | 281-0775-01 | | | CAP,FXD,CER DI:0.1UF,20%,50V | 04222 | SA105E104MAA |
| A3A1C765 | 281-0775-02 | | | CAP,FXD,CERAMIC:MLC;0.1UF,20%,50V,X7R,0.265 X 0.100;AXIAL,T&R | 04222 | SA205C104MAA |
| A3A1C766 | 281-0775-02 | | | CAP,FXD,CERAMIC:MLC;0.1UF,20%,50V,X7R,0.265 X 0.100;AXIAL,T&R | 04222 | SA205C104MAA |
| A3A1C771 | 281-0775-01 | | | CAP,FXD,CER DI:0.1UF,20%,50V | 04222 | SA105E104MAA |
| A3A1C785 | 290-0943-00 | | | CAP,FXD,ELCTLT:47UF,+50-20%,25V | 55680 | UVX1V470MPA |
| A3A1C787 | 281-0775-01 | | | CAP,FXD,CER DI:0.1UF,20%,50V | 04222 | SA105E104MAA |
| A3A1C793 | 290-0943-00 | | | CAP,FXD,ELCTLT:47UF,+50-20%,25V | 55680 | UVX1V470MPA |
| A3A1C797 | 281-0775-01 | | | CAP,FXD,CER DI:0.1UF,20%,50V | 04222 | SA105E104MAA |
| A3A1C798 | 281-0775-01 | | | CAP,FXD,CER DI:0.1UF,20%,50V | 04222 | SA105E104MAA |
| A3A1C863 | 281-0775-01 | | | CAP,FXD,CER DI:0.1UF,20%,50V | 04222 | SA105E104MAA |
| A3A1C865 | 281-0775-02 | | | CAP,FXD,CERAMIC:MLC;0.1UF,20%,50V,X7R,0.265 X 0.100;AXIAL,T&R | 04222 | SA205C104MAA |
| A3A1C866 | 281-0775-02 | | | CAP,FXD,CERAMIC:MLC;0.1UF,20%,50V,X7R,0.265 X 0.100;AXIAL,T&R | 04222 | SA205C104MAA |
| A3A1C873 | 290-0973-00 | | | CAP,FXD,ELCTLT:100UF,20%,25VDC | 24165 | 513D107M025BB4D |
| A3A1C883 | 281-0775-01 | | | CAP,FXD,CER DI:0.1UF,20%,50V | 04222 | SA105E104MAA |
| A3A1C885 | 281-0775-01 | | | CAP,FXD,CER DI:0.1UF,20%,50V | 04222 | SA105E104MAA |
| A3A1C887 | 281-0775-01 | | | CAP,FXD,CER DI:0.1UF,20%,50V | 04222 | SA105E104MAA |
| A3A1C888 | 281-0775-01 | | | CAP,FXD,CER DI:0.1UF,20%,50V | 04222 | SA105E104MAA |
| A3A1C889 | 281-0775-01 | | | CAP,FXD,CER DI:0.1UF,20%,50V | 04222 | SA105E104MAA |
| A3A1C894 | 283-0220-00 | | | CAP,FXD,CER DI:0.01UF,20%,50V | 04222 | SR205C103MAA |
| A3A1C895 | 281-0775-01 | | | CAP,FXD,CER DI:0.1UF,20%,50V | 04222 | SA105E104MAA |
| A3A1C896 | 290-0943-00 | | | CAP,FXD,ELCTLT:47UF,+50-20%,25V | 55680 | UVX1V470MPA |
| A3A1C972 | 290-0943-00 | | | CAP,FXD,ELCTLT:47UF,+50-20%,25V | 55680 | UVX1V470MPA |

| Component No. | Tektronix Part No. | Serial/Assembly No. Effective | Dscont | Name & Description | Mfr. Code | Mfr. Part No. |
|---|---|---|---|---|---|---|
| A3A1C976 | 290-0973-00 | | | CAP,FXD,ELCTLT:100UF,20%,25VDC | 24165 | 513D107M025BB4D |
| A3A1C983 | 281-0775-01 | | | CAP,FXD,CER DI:0.1UF,20%,50V | 04222 | SA105E104MAA |
| A3A1C985 | 283-0649-00 | | | CAP,FXD,MICA DI:105PF,1%,500V | 80009 | 283-0649-00 |
| A3A1C986 | 290-0758-00 | | | CAP,FXD,ELCTLT:2.2UF,+50-10%,200V | 80009 | 290-0758-00 |
| A3A1C988 | 281-0775-01 | | | CAP,FXD,CER DI:0.1UF,20%,50V | 04222 | SA105E104MAA |
| A3A1C992 | 290-0943-00 | | | CAP,FXD,ELCTLT:47UF,+50-20%,25V | 55680 | UVX1V470MPA |
| A3A1C994 | 290-0943-00 | | | CAP,FXD,ELCTLT:47UF,+50-20%,25V | 55680 | UVX1V470MPA |
| A3A1CR245 | 152-0141-02 | | | DIODE,SIG:,ULTRA FAST;40V,150MA,4NS,2PF;1N4152,DO-35,T&R | 80009 | 152-0141-02 |
| A3A1CR767 | 152-0141-02 | | | DIODE,SIG:,ULTRA FAST;40V,150MA,4NS,2PF;1N4152,DO-35,T&R | 80009 | 152-0141-02 |
| A3A1CR864 | 152-0141-02 | | | DIODE,SIG:,ULTRA FAST;40V,150MA,4NS,2PF;1N4152,DO-35,T&R | 80009 | 152-0141-02 |
| A3A1CR888 | 152-0141-02 | | | DIODE,SIG:,ULTRA FAST;40V,150MA,4NS,2PF;1N4152,DO-35,T&R | 80009 | 152-0141-02 |
| A3A1CR889 | 152-0141-02 | | | DIODE,SIG:,ULTRA FAST;40V,150MA,4NS,2PF;1N4152,DO-35,T&R | 80009 | 152-0141-02 |
| A3A1DL126 | 119-3050-00 | | | DELAY LINE,ELEC:5.0NS,50 OHM,PASSIVE,PKG 3 PIN SIP | 80009 | 119-3050-00 |
| A3A1DL136 | 119-3050-00 | | | DELAY LINE,ELEC:5.0NS,50 OHM,PASSIVE,PKG 3 PIN SIP | 80009 | 119-3050-00 |
| A3A1DL146 | 119-3049-00 | | | DELAY LINE,ELEC:10NS,50 OHM,PASSIVE,PKG 3 P IN SIP | 80009 | 119-3049-00 |
| A3A1DL222 | 119-3052-00 | | | DELAY LINE,ELEC:VAR, 0 - 10 NSEC, INPUT 50 OHM, OUTPUT 100 OHM, DIP | TK2204 | FDS15005 |
| A3A1DL227 | 119-3050-00 | | | DELAY LINE,ELEC:5.0NS,50 OHM,PASSIVE,PKG 3 PIN SIP | 80009 | 119-3050-00 |
| A3A1DL232 | 119-3047-00 | | | DELAY LINE,ELEC:15NS,50 OHM,DIP16 | 80009 | 119-3047-00 |
| A3A1DL237 | 119-3050-00 | | | DELAY LINE,ELEC:5.0NS,50 OHM,PASSIVE,PKG 3 PIN SIP | 80009 | 119-3050-00 |
| A3A1DL239 | 119-3048-00 | | | DELAY LINE,ELEC:7.0NS,50 OHM,SIP | 80009 | 119-3048-00 |
| A3A1DL336 | 119-3049-00 | | | DELAY LINE,ELEC:10NS,50 OHM,PASSIVE,PKG 3 P IN SIP | 80009 | 119-3049-00 |
| A3A1DS194 | 150-1020-00 | | | LT EMITTING DIO:RED,3MA MAX | 15513 | SP830719 |
| A3A1F989 | 159-0059-00 | | | FUSE,WIRE LEAD:5A,125V | 80009 | 159-0059-00 |
| A3A1F996 | 159-0059-00 | | | FUSE,WIRE LEAD:5A,125V | 80009 | 159-0059-00 |
| A3A1J111 | 131-0608-00 | | | TERMINAL,PIN:0.365 L X 0.025 BRZ GLD PL (QUANTITY 10) | 80009 | 131-0608-00 |
| A3A1J164 | 174-0838-00 | | | CA ASSY,SP,ELEC:34,30 AWG,9.2 L,RIBBON | 80009 | 174-0838-00 |
| A3A1J185 | 131-3213-00 | | | CONN,HDR:PCB,;MALE,STR,2 X 6,0.1 CTR,0.318 MLG X 0.100 TAIL,30 GOLD;,, | 58050 | 182-0644-SD11 |
| A3A1J192 | 131-1857-00 | | | CONN,HDR:PCB,;MALE,STR,1 X 36,0.1 CTR,0.230 MLG X 0.100 TAIL,GOLD;,, | 58050 | 082-3644-SS10 |
| A3A1J246 | 131-0608-00 | | | TERMINAL,PIN:0.365 L X 0.025 BRZ GLD PL (QUANTITY 3) | 80009 | 131-0608-00 |
| A3A1J419 | 131-0591-00 | | | TERMINAL,PIN: (QUANTITY 2) | 80009 | 131-0591-00 |
| A3A1J439 | 131-0591-00 | | | TERMINAL,PIN: (QUANTITY 2) | 80009 | 131-0591-00 |
| A3A1J577 | 131-0608-00 | | | TERMINAL,PIN:0.365 L X 0.025 BRZ GLD PL (QUANTITY 2) | 80009 | 131-0608-00 |
| A3A1J712 | 131-0608-00 | | | TERMINAL,PIN:0.365 L X 0.025 BRZ GLD PL (QUANTITY 3) | 80009 | 131-0608-00 |
| A3A1J716 | 131-0591-00 | | | TERMINAL,PIN: (QUANTITY 2) | 80009 | 131-0591-00 |
| A3A1J995 | 131-4136-00 | 671-0100-03 | 671-0100-04 | CONN,HDR PWR:PCB,;MALE,STR,1 X 10,0.156 CTR,0.450 MLG X 0.172 TAIL,0.045 SQ,GOLD;,, | 27264 | 26-48-2101 |
| A3A1J995 | 131-4884-00 | 671-0100-05 | | CONN,HDR PWR: | 80009 | 131-4884-00 |
| A3A1L675 | 108-0655-00 | | | COIL,RF:FIXED,63NH | 80009 | 108-0655-00 |
| A3A1P246 | 131-0993-02 | | | BUS,CONDUCTOR:SHUNT ASSEMBLY,RED | 00779 | 1-850100-0 |

| Component No. | Tektronix Part No. | Serial/Assembly No. Effective | Dscont | Name & Description | Mfr. Code | Mfr. Part No. |
|---|---|---|---|---|---|---|
| A3A1Q786 | 151-0736-00 | | | TRANSISTOR,SIG:BIPOLAR,NPN;40V,600MA,250MHZ ,AMPLIFIER;2N4401,TO-92 EBC | 80009 | 151-0736-00 |
| A3A1Q882 | 151-0406-00 | | | TRANSISTOR,SIG:BIPOLAR,PNP;175V,1.0A,200MHZ ,AMPLIFIER;2N3637,TO-39 | 80009 | 151-0406-00 |
| A3A1Q966 | 151-0647-00 | | | TRANSISTOR,PWR:BIPOLAR,PNP;150V,8.0A,30MHZ, AMPLIFIER;MJE15031,TO-220 | 04713 | MJE15031 |
| | | | | *ATTACHED PARTS* | | |
| | 210-0586-00 | | | NUT,PL,ASSEM WA:4-40 X 0.25,STL CD PL | 78189 | 211-041800-00 |
| | 210-1171-00 | | | WASHER,SHLDR:0.12 ID X 0.143 OD X 0.07 D | 00261 | A7148516P2 |
| | 211-0012-00 | | | SCREW,MACHINE:4-40 X 0.375,PNH,STL | 93907 | ORDER BY DESCR |
| | 214-3036-00 | | | HEAT SINK,XSTR:TO-220,ALUMINUM | 98978 | 7363-BA |
| | 342-0563-00 | | | INSULATOR,PLATE:TRANSISTOR,FIBERGLASS REINF ORCED SILICON RUBBER | 18565 | 69-11-8805-1674 |
| | | | | *END ATTACHED PARTS* | | |
| A3A1Q973 | 151-0407-00 | | | TRANSISTOR:NPN,SI,TO-39 | 80009 | 151-0407-00 |
| A3A1R131 | 307-0503-00 | | | RES NTWK,FXD,FI:(9) 510 OHM,20%,0.125W | 91637 | CSC10A01511GD03 |
| A3A1R149 | 315-0510-00 | | | RES,FXD,FILM:51 OHM,5%,0.25W | 80009 | 315-0510-00 |
| A3A1R159 | 307-0503-00 | | | RES NTWK,FXD,FI:(9) 510 OHM,20%,0.125W | 91637 | CSC10A01511GD03 |
| A3A1R179 | 307-0503-00 | | | RES NTWK,FXD,FI:(9) 510 OHM,20%,0.125W | 91637 | CSC10A01511GD03 |
| A3A1R185 | 307-0503-00 | | | RES NTWK,FXD,FI:(9) 510 OHM,20%,0.125W | 91637 | CSC10A01511GD03 |
| A3A1R195 | 315-0221-00 | | | RES,FXD,FILM:220 OHM,5%,0.25W | 80009 | 315-0221-00 |
| A3A1R212 | 315-0101-00 | | | RES,FXD,FILM:100 OHM,5%,0.25W | 80009 | 315-0101-00 |
| A3A1R218 | 315-0101-00 | | | RES,FXD,FILM:100 OHM,5%,0.25W | 80009 | 315-0101-00 |
| A3A1R241 | 315-0510-00 | | | RES,FXD,FILM:51 OHM,5%,0.25W | 80009 | 315-0510-00 |
| A3A1R242 | 315-0510-00 | | | RES,FXD,FILM:51 OHM,5%,0.25W | 80009 | 315-0510-00 |
| A3A1R243 | 315-0510-00 | | | RES,FXD,FILM:51 OHM,5%,0.25W | 80009 | 315-0510-00 |
| A3A1R244 | 315-0152-00 | | | RES,FXD,FILM:1.5K OHM,5%,0.25W | 80009 | 315-0152-00 |
| A3A1R266 | 307-0539-00 | | | RES NTWK,FXD,FI:(7)510 OHM,10%,1W | 80009 | 307-0539-00 |
| A3A1R268 | 307-1318-00 | | | RES NTWK,FXD,FI:(2) 162 OHM,(2) 260 OHM,2%, 0.125W | 80009 | 307-1318-00 |
| A3A1R269 | 307-0539-00 | | | RES NTWK,FXD,FI:(7)510 OHM,10%,1W | 80009 | 307-0539-00 |
| A3A1R284 | 307-0526-00 | | | RES,NTWK:THICK FILM;(5)510 OHM,10%,0.125W E ACH,TC=100 PPM;SIP6,PIN 1 COMMON | 57924 | 4306X-101-511 |
| A3A1R294 | 307-1318-00 | | | RES NTWK,FXD,FI:(2) 162 OHM,(2) 260 OHM,2%, 0.125W | 80009 | 307-1318-00 |
| A3A1R296 | 307-1318-00 | | | RES NTWK,FXD,FI:(2) 162 OHM,(2) 260 OHM,2%, 0.125W | 80009 | 307-1318-00 |
| A3A1R298 | 307-1318-00 | | | RES NTWK,FXD,FI:(2) 162 OHM,(2) 260 OHM,2%, 0.125W | 80009 | 307-1318-00 |
| A3A1R310 | 315-0101-00 | | | RES,FXD,FILM:100 OHM,5%,0.25W | 80009 | 315-0101-00 |
| A3A1R311 | 315-0510-00 | | | RES,FXD,FILM:51 OHM,5%,0.25W | 80009 | 315-0510-00 |
| A3A1R312 | 315-0510-00 | | | RES,FXD,FILM:51 OHM,5%,0.25W | 80009 | 315-0510-00 |
| A3A1R313 | 322-3133-00 | | | RES,FXD,FILM:237 OHM,1%,0.2W,TC=T0 | 91637 | CCF50-2F237R0F |
| A3A1R314 | 321-0111-00 | | | RES,FXD,FILM:140 OHM,1%,0.125W,TC=T0 | 07716 | CEAD140R0F |
| A3A1R315 | 315-0101-00 | | | RES,FXD,FILM:100 OHM,5%,0.25W | 80009 | 315-0101-00 |
| A3A1R347 | 315-0105-00 | | | RES,FXD,FILM:1M OHM,5%,0.25W | 80009 | 315-0105-00 |
| A3A1R350 | 307-0539-00 | | | RES NTWK,FXD,FI:(7)510 OHM,10%,1W | 80009 | 307-0539-00 |
| A3A1R359 | 307-0539-00 | | | RES NTWK,FXD,FI:(7)510 OHM,10%,1W | 80009 | 307-0539-00 |
| A3A1R368 | 307-0539-00 | | | RES NTWK,FXD,FI:(7)510 OHM,10%,1W | 80009 | 307-0539-00 |
| A3A1R375 | 307-0539-00 | | | RES NTWK,FXD,FI:(7)510 OHM,10%,1W | 80009 | 307-0539-00 |
| A3A1R382 | 307-1318-00 | | | RES NTWK,FXD,FI:(2) 162 OHM,(2) 260 OHM,2%, 0.125W | 80009 | 307-1318-00 |
| A3A1R388 | 307-0539-00 | | | RES NTWK,FXD,FI:(7)510 OHM,10%,1W | 80009 | 307-0539-00 |
| A3A1R392 | 307-0526-00 | | | RES,NTWK:THICK FILM;(5)510 OHM,10%,0.125W E ACH,TC=100 PPM;SIP6,PIN 1 COMMON | 57924 | 4306X-101-511 |
| A3A1R399 | 307-0526-00 | | | RES,NTWK:THICK FILM;(5)510 OHM,10%,0.125W E ACH,TC=100 PPM;SIP6,PIN 1 COMMON | 57924 | 4306X-101-511 |
| A3A1R465 | 307-1318-00 | | | RES NTWK,FXD,FI:(2) 162 OHM,(2) 260 OHM,2%, 0.125W | 80009 | 307-1318-00 |

| Component No. | Tektronix Part No. | Serial/Assembly No. Effective | Dscont | Name & Description | Mfr. Code | Mfr. Part No. |
|---|---|---|---|---|---|---|
| A3A1R513 | 322-3085-00 | | | RES,FXD:METAL FILM;75 OHM,1%,0.2W,TC=100 PPM;AXIAL,T&R,SMALL BODY | 57668 | CRB20 FXE 75E0 |
| A3A1R520 | 308-0431-00 | | | RES,FXD,WW:120 OHM,5%,3W | 80009 | 308-0431-00 |
| A3A1R526 | 321-0097-07 | | | RES,FXD,FILM:100 OHM,0.1%,0.125W,TC=T9 | 80009 | 321-0097-07 |
| A3A1R533 | 308-0431-00 | | | RES,FXD,WW:120 OHM,5%,3W | 80009 | 308-0431-00 |
| A3A1R535 | 307-1318-00 | | | RES NTWK,FXD,FI:(2) 162 OHM,(2) 260 OHM,2%,0.125W | 80009 | 307-1318-00 |
| A3A1R555 | 307-1318-00 | | | RES NTWK,FXD,FI:(2) 162 OHM,(2) 260 OHM,2%,0.125W | 80009 | 307-1318-00 |
| A3A1R557 | 322-3085-00 | | | RES,FXD:METAL FILM;75 OHM,1%,0.2W,TC=100 PPM;AXIAL,T&R,SMALL BODY | 57668 | CRB20 FXE 75E0 |
| A3A1R563 | 322-3030-00 | | | RES,FXD:METAL FILM;20 OHM,1%,0.2W,TC=100 PPM;AXIAL,T&R,SMALL BODY | 80009 | 322-3030-00 |
| A3A1R564 | 322-3193-00 | | | RES,FXD:METAL FILM;1K OHM,1%,0.2W,TC=100 PPM;AXIAL,T&R,SMALL BODY | 57668 | CRB20 FXE 1K00 |
| A3A1R569 | 325-0390-00 | | | RES,FXD,FILM:8K OHM,0.02%,0.3W | 80009 | 325-0390-00 |
| A3A1R573 | 322-3030-00 | | | RES,FXD:METAL FILM;20 OHM,1%,0.2W,TC=100 PPM;AXIAL,T&R,SMALL BODY | 80009 | 322-3030-00 |
| A3A1R574 | 322-3201-00 | | | RES,FXD:METAL FILM;1.21K OHM,1%,0.2W,TC=100 PPM;AXIAL,T&R,SMALL BODY | 80009 | 322-3201-00 |
| A3A1R587 | 321-1264-07 | | | RES,FXD,FILM:5.56K OHM,0.1%,0.125W,TC=T9 | 07716 | |
| A3A1R588 | 321-0609-07 | | | RES,FXD,FILM:480 OHM,0.1%,0.125W,TC=T9 | 80009 | 321-0609-07 |
| A3A1R611 | 321-0370-00 | | | RES,FXD,FILM:69.8K OHM,1%,0.125W,TC=T0 | 07716 | CEAD69801F |
| A3A1R614 | 321-0143-07 | | | RES,FXD,FILM:301 OHM,0.1%,0.125W,TC=T9 | 80009 | 321-0143-07 |
| A3A1R615 | 322-3239-00 | | | RES,FXD,FILM:3.01K OHM,1%,0.2W,TC=T0 | 57668 | CRB20 FXE 3K01 |
| A3A1R616 | 321-0143-07 | | | RES,FXD,FILM:301 OHM,0.1%,0.125W,TC=T9 | 80009 | 321-0143-07 |
| A3A1R619 | 311-0622-00 | | | RES,VAR,NONWW:TRMR,100 OHM,0.5W | 80009 | 311-0622-00 |
| A3A1R622 | 321-0928-07 | | | RES,FXD,FILM:250 OHM,0.1%,0.125W,TC=T9 | 2M627 | CRA18BZ250OHM |
| A3A1R623 | 321-0097-07 | | | RES,FXD,FILM:100 OHM,0.1%,0.125W,TC=T9 | 80009 | 321-0097-07 |
| A3A1R624 | 322-3255-00 | | | RES,FXD,FILM:4.42K OHM,1%,0.2W,TC=T0 | 80009 | 322-3255-00 |
| A3A1R632 | 321-0097-07 | | | RES,FXD,FILM:100 OHM,0.1%,0.125W,TC=T9 | 80009 | 321-0097-07 |
| A3A1R653 | 307-0526-00 | | | RES,NTWK:THICK FILM;(5)510 OHM,10%,0.125W EACH,TC=100 PPM;SIP6,PIN 1 COMMON | 57924 | 4306X-101-511 |
| A3A1R658 | 315-0511-00 | | | RES,FXD,FILM:510 OHM,5%,0.25W | 80009 | 315-0511-00 |
| A3A1R659 | 315-0511-00 | | | RES,FXD,FILM:510 OHM,5%,0.25W | 80009 | 315-0511-00 |
| A3A1R673 | 325-0389-00 | | | RES,FXD,FILM:102.4 OHM,0.02%,0.3W | 80009 | 325-0389-00 |
| A3A1R676 | 322-3098-00 | | | RES,FXD,FILM:102 OHM,1%,0.2W,TC=T0 | 57668 | CRB20 FXE 102E |
| A3A1R677 | 325-0390-00 | | | RES,FXD,FILM:8K OHM,0.02%,0.3W | 80009 | 325-0390-00 |
| A3A1R686 | 322-3158-00 | | | RES,FXD,FILM:432 OHM,1%,0.2W,TC=T0 | 80009 | 322-3158-00 |
| A3A1R687 | 315-0391-00 | | | RES,FXD,FILM:390 OHM,5%,0.25W | 80009 | 315-0391-00 |
| A3A1R691 | 315-0912-00 | | | RES,FXD,FILM:9.1K OHM,5%,0.25W | 80009 | 315-0912-00 |
| A3A1R695 | 311-1897-00 | | | RES,VAR,NONWW:TRMR,25K OHM,10%,0.5W,LIN | 32997 | 3299W-1-253 |
| A3A1R721 | 321-0095-00 | | | RES,FXD,FILM:95.3 OHM,1%,0.125W,TC=T0 | 80009 | 321-0095-00 |
| A3A1R722 | 322-3085-00 | | | RES,FXD:METAL FILM;75 OHM,1%,0.2W,TC=100 PPM;AXIAL,T&R,SMALL BODY | 57668 | CRB20 FXE 75E0 |
| A3A1R723 | 322-3193-00 | | | RES,FXD:METAL FILM;1K OHM,1%,0.2W,TC=100 PPM;AXIAL,T&R,SMALL BODY | 57668 | CRB20 FXE 1K00 |
| A3A1R796 | 322-3193-00 | | | RES,FXD:METAL FILM;1K OHM,1%,0.2W,TC=100 PPM;AXIAL,T&R,SMALL BODY | 57668 | CRB20 FXE 1K00 |
| A3A1R797 | 315-0151-00 | | | RES,FXD,FILM:150 OHM,5%,0.25W | 80009 | 315-0151-00 |
| A3A1R872 | 308-0620-00 | | | RES,FXD,WW:27.0 OHM,1%,3W | 91637 | RS2B-27R0F |
| A3A1R875 | 308-0620-00 | | | RES,FXD,WW:27.0 OHM,1%,3W | 91637 | RS2B-27R0F |
| A3A1R881 | 315-0512-00 | | | RES,FXD,FILM:5.1K OHM,5%,0.25W | 80009 | 315-0512-00 |
| A3A1R884 | 315-0151-00 | | | RES,FXD,FILM:150 OHM,5%,0.25W | 80009 | 315-0151-00 |
| A3A1R886 | 322-3289-00 | | | RES,FXD:METAL FILM;10K OHM,1%,0.2W,TC=100 PPM;AXIAL,T&R,SMALL BODY | 80009 | 322-3289-00 |
| A3A1R887 | 322-3289-00 | | | RES,FXD:METAL FILM;10K OHM,1%,0.2W,TC=100 PPM;AXIAL,T&R,SMALL BODY | 80009 | 322-3289-00 |

| Component No. | Tektronix Part No. | Serial/Assembly No. Effective | Dscont | Name & Description | Mfr. Code | Mfr. Part No. |
|---|---|---|---|---|---|---|
| A3A1R892 | 322-3193-00 | | | RES,FXD:METAL FILM;1K OHM,1%,0.2W,TC=100 PPM;AXIAL,T&R,SMALL BODY | 57668 | CRB20 FXE 1K00 |
| A3A1R974 | 315-0102-00 | | | RES,FXD,FILM:1K OHM,5%,0.25W | 80009 | 315-0102-00 |
| A3A1R975 | 308-0710-00 | | | RES,FXD:0.27 OHM,5%,1W | 80009 | 308-0710-00 |
| A3A1R982 | 315-0392-00 | | | RES,FXD,FILM:3.9K OHM,5%,0.25W | 80009 | 315-0392-00 |
| A3A1R984 | 321-1687-07 | | | RES,FXD,FILM:13.28K OHM,0.1%,0.125W,TC=T9 | 07716 | CEAE13281B |
| A3A1R985 | 321-1682-07 | | | RES,FXD,FILM:5.7K OHM,0.1%,0.125W,TC=T9 | 80009 | 321-1682-07 |
| A3A1TP112 | 214-4085-00 | | | TERM,TEST POINT:0.070 ID,0.220 H,0.063 DIA PCB,0.015 X 0.032 BRASS,W/ RED NYLON COLLAR | 26364 | 104-01-02 |
| A3A1TP114 | 214-4085-00 | | | TERM,TEST POINT:0.070 ID,0.220 H,0.063 DIA PCB,0.015 X 0.032 BRASS,W/ RED NYLON COLLAR | 26364 | 104-01-02 |
| A3A1TP118 | 214-4085-00 | | | TERM,TEST POINT:0.070 ID,0.220 H,0.063 DIA PCB,0.015 X 0.032 BRASS,W/ RED NYLON COLLAR | 26364 | 104-01-02 |
| A3A1TP119 | 214-4085-00 | | | TERM,TEST POINT:0.070 ID,0.220 H,0.063 DIA PCB,0.015 X 0.032 BRASS,W/ RED NYLON COLLAR | 26364 | 104-01-02 |
| A3A1TP146 | 131-0608-00 | | | TERMINAL,PIN:0.365 L X 0.025 BRZ GLD PL | 80009 | 131-0608-00 |
| A3A1TP152 | 214-4085-00 | | | TERM,TEST POINT:0.070 ID,0.220 H,0.063 DIA PCB,0.015 X 0.032 BRASS,W/ RED NYLON COLLAR | 26364 | 104-01-02 |
| A3A1TP188 | 214-4085-00 | | | TERM,TEST POINT:0.070 ID,0.220 H,0.063 DIA PCB,0.015 X 0.032 BRASS,W/ RED NYLON COLLAR | 26364 | 104-01-02 |
| A3A1TP189 | 214-4085-00 | | | TERM,TEST POINT:0.070 ID,0.220 H,0.063 DIA PCB,0.015 X 0.032 BRASS,W/ RED NYLON COLLAR | 26364 | 104-01-02 |
| A3A1TP196 | 214-4085-00 | | | TERM,TEST POINT:0.070 ID,0.220 H,0.063 DIA PCB,0.015 X 0.032 BRASS,W/ RED NYLON COLLAR | 26364 | 104-01-02 |
| A3A1TP248 | 214-4085-00 | | | TERM,TEST POINT:0.070 ID,0.220 H,0.063 DIA PCB,0.015 X 0.032 BRASS,W/ RED NYLON COLLAR | 26364 | 104-01-02 |
| A3A1TP249 | 214-4085-00 | | | TERM,TEST POINT:0.070 ID,0.220 H,0.063 DIA PCB,0.015 X 0.032 BRASS,W/ RED NYLON COLLAR | 26364 | 104-01-02 |
| A3A1TP356 | 214-4085-00 | | | TERM,TEST POINT:0.070 ID,0.220 H,0.063 DIA PCB,0.015 X 0.032 BRASS,W/ RED NYLON COLLAR | 26364 | 104-01-02 |
| A3A1TP357 | 214-4085-00 | | | TERM,TEST POINT:0.070 ID,0.220 H,0.063 DIA PCB,0.015 X 0.032 BRASS,W/ RED NYLON COLLAR | 26364 | 104-01-02 |
| A3A1TP579 | 214-4085-00 | | | TERM,TEST POINT:0.070 ID,0.220 H,0.063 DIA PCB,0.015 X 0.032 BRASS,W/ RED NYLON COLLAR | 26364 | 104-01-02 |
| A3A1TP580 | 214-4085-00 | | | TERM,TEST POINT:0.070 ID,0.220 H,0.063 DIA PCB,0.015 X 0.032 BRASS,W/ RED NYLON COLLAR | 26364 | 104-01-02 |
| A3A1TP595 | 214-4085-00 | | | TERM,TEST POINT:0.070 ID,0.220 H,0.063 DIA PCB,0.015 X 0.032 BRASS,W/ RED NYLON COLLAR | 26364 | 104-01-02 |
| A3A1TP657 | 214-4085-00 | | | TERM,TEST POINT:0.070 ID,0.220 H,0.063 DIA PCB,0.015 X 0.032 BRASS,W/ RED NYLON COLLAR | 26364 | 104-01-02 |
| A3A1TP658 | 214-4085-00 | | | TERM,TEST POINT:0.070 ID,0.220 H,0.063 DIA PCB,0.015 X 0.032 BRASS,W/ RED NYLON COLLAR | 26364 | 104-01-02 |
| A3A1TP659 | 214-4085-00 | | | TERM,TEST POINT:0.070 ID,0.220 H,0.063 DIA PCB,0.015 X 0.032 BRASS,W/ RED NYLON COLLAR | 26364 | 104-01-02 |
| A3A1TP777 | 214-4085-00 | | | TERM,TEST POINT:0.070 ID,0.220 H,0.063 DIA PCB,0.015 X 0.032 BRASS,W/ RED NYLON COLLAR | 26364 | 104-01-02 |
| A3A1TP784 | 214-4085-00 | | | TERM,TEST POINT:0.070 ID,0.220 H,0.063 DIA PCB,0.015 X 0.032 BRASS,W/ RED NYLON COLLAR | 26364 | 104-01-02 |
| A3A1TP792 | 214-4085-00 | | | TERM,TEST POINT:0.070 ID,0.220 H,0.063 DIA PCB,0.015 X 0.032 BRASS,W/ RED NYLON COLLAR | 26364 | 104-01-02 |
| A3A1TP794 | 214-4085-00 | | | TERM,TEST POINT:0.070 ID,0.220 H,0.063 DIA PCB,0.015 X 0.032 BRASS,W/ RED NYLON COLLAR | 26364 | 104-01-02 |
| A3A1TP795 | 214-4085-00 | | | TERM,TEST POINT:0.070 ID,0.220 H,0.063 DIA PCB,0.015 X 0.032 BRASS,W/ RED NYLON COLLAR | 26364 | 104-01-02 |
| A3A1TP799 | 214-4085-00 | | | TERM,TEST POINT:0.070 ID,0.220 H,0.063 DIA PCB,0.015 X 0.032 BRASS,W/ RED NYLON COLLAR | 26364 | 104-01-02 |
| A3A1TP877 | 214-4085-00 | | | TERM,TEST POINT:0.070 ID,0.220 H,0.063 DIA PCB,0.015 X 0.032 BRASS,W/ RED NYLON COLLAR | 26364 | 104-01-02 |

| Component No. | Tektronix Part No. | Serial/Assembly No. Effective | Dscont | Name & Description | Mfr. Code | Mfr. Part No. |
|---|---|---|---|---|---|---|
| A3A1TP972 | 214-4085-00 | | | TERM,TEST POINT:0.070 ID,0.220 H,0.063 DIA PCB,0.015 X 0.032 BRASS,W/ RED NYLON COLLAR | 26364 | 104-01-02 |
| A3A1TP988 | 214-4085-00 | | | TERM,TEST POINT:0.070 ID,0.220 H,0.063 DIA PCB,0.015 X 0.032 BRASS,W/ RED NYLON COLLAR | 26364 | 104-01-02 |
| A3A1U122 | 156-1639-00 | | | IC,DIGITAL:ECL,FLIP FLOP;DUAL D-TYPE MASTER -SLAVE;10H131,DIP16.3,TUBE | 80009 | 156-1639-00 |
| A3A1U132 | 156-1639-00 | | | IC,DIGITAL:ECL,FLIP FLOP;DUAL D-TYPE MASTER -SLAVE;10H131,DIP16.3,TUBE | 80009 | 156-1639-00 |
| A3A1U154 | 156-1639-00 | | | IC,DIGITAL:ECL,FLIP FLOP;DUAL D-TYPE MASTER -SLAVE;10H131,DIP16.3,TUBE | 80009 | 156-1639-00 |
| A3A1U174 | 156-1639-00 | | | IC,DIGITAL:ECL,FLIP FLOP;DUAL D-TYPE MASTER -SLAVE;10H131,DIP16.3,TUBE | 80009 | 156-1639-00 |
| A3A1U215 | 156-0308-04 | | | IC,DIGITAL: | 80009 | 156-0308-04 |
| A3A1U238 | 156-1640-00 | | | IC,DIGITAL:ECL,RECEIVER;TRIPLE LINE;10H116, DIP16.3,TUBE | 80009 | 156-1640-00 |
| A3A1U254 | 156-1639-00 | | | IC,DIGITAL:ECL,FLIP FLOP;DUAL D-TYPE MASTER -SLAVE;10H131,DIP16.3,TUBE | 80009 | 156-1639-00 |
| A3A1U264 | 156-1639-00 | | | IC,DIGITAL:ECL,FLIP FLOP;DUAL D-TYPE MASTER -SLAVE;10H131,DIP16.3,TUBE | 80009 | 156-1639-00 |
| A3A1U274 | 156-1639-00 | | | IC,DIGITAL:ECL,FLIP FLOP;DUAL D-TYPE MASTER -SLAVE;10H131,DIP16.3,TUBE | 80009 | 156-1639-00 |
| A3A1U279 | 156-1639-00 | | | IC,DIGITAL:ECL,FLIP FLOP;DUAL D-TYPE MASTER -SLAVE;10H131,DIP16.3,TUBE | 80009 | 156-1639-00 |
| A3A1U288 | 156-1639-00 | | | IC,DIGITAL:ECL,FLIP FLOP;DUAL D-TYPE MASTER -SLAVE;10H131,DIP16.3,TUBE | 80009 | 156-1639-00 |
| A3A1U318 | 156-2223-00 | | | IC,LINEAR:BIPOLAR,VOLTAGE REGULATOR;NEGATIV E,ADJUSTABLE,100MA,4%;LM337LZ,TO-92 | 80009 | 156-2223-00 |
| A3A1U324 | 156-1640-00 | | | IC,DIGITAL:ECL,RECEIVER;TRIPLE LINE;10H116, DIP16.3,TUBE | 80009 | 156-1640-00 |
| A3A1U328 | 156-0182-02 | | | IC,DIGITAL:ECL,GATE;TRIPLE 2-3-2 INPUT OR/N OR;10105,DIP16.3,TUBE,SCRN | 80009 | 156-0182-02 |
| A3A1U342 | 156-0182-02 | | | IC,DIGITAL:ECL,GATE;TRIPLE 2-3-2 INPUT OR/N OR;10105,DIP16.3,TUBE,SCRN | 80009 | 156-0182-02 |
| | | | | *MOUNTING PARTS* | | |
| | 136-0729-00 | | | SOCKET,DIP:PCB,;FEMALE,STR,2 X 8,16 POS,0.1 X 0.3 CTR,0.175 H X 0.130 TAIL,BECU,TIN | 09922 | DILB16P-108T |
| | | | | *END MOUNTING PARTS* | | |
| A3A1U345 | 160-5119-00 | | | MICROCKT,DGTL:ECL,256 X 4 PROM,PRGM | 80009 | 160-5119-00 |
| A3A1U355 | 160-5120-00 | | | MICROCKT,DGTL:ECL,256 X 4 PROM,PRGM | 80009 | 160-5120-00 |
| | | | | *MOUNTING PARTS* | | |
| | 136-0729-00 | | | SOCKET,DIP:PCB,;FEMALE,STR,2 X 8,16 POS,0.1 X 0.3 CTR,0.175 H X 0.130 TAIL,BECU,TIN | 09922 | DILB16P-108T |
| | | | | *END MOUNTING PARTS* | | |
| A3A1U364 | 156-3119-00 | | | IC,DIGITAL:ECL,FLIP FLOP;HEX D-TYPE, WITH R ESET;10H186,DIP16.3,TUBE | 80009 | 156-3119-00 |
| A3A1U374 | 156-3119-00 | | | IC,DIGITAL:ECL,FLIP FLOP;HEX D-TYPE, WITH R ESET;10H186,DIP16.3,TUBE | 80009 | 156-3119-00 |
| A3A1U379 | 156-0543-00 | | | IC,DIGITAL:ECL,BUFFER;HEX, WITH ENABLE;1018 8,DIP16.3,TUBE | 18324 | 10188N |
| A3A1U386 | 156-1712-00 | | | IC,DIGITAL:ECL,FLIP FLOP;HEX D-TYPE MASTER SLAVE;10H176,DIP16.3 | 04713 | MC10H176 P |
| A3A1U395 | 156-1712-00 | | | IC,DIGITAL:ECL,FLIP FLOP;HEX D-TYPE MASTER SLAVE;10H176,DIP16.3 | 04713 | MC10H176 P |
| A3A1U458 | 155-0289-01 | 671-0100-03 | 671-0100-04 | MICROCKT,DGTL:A-D CONV,0.25V REF VOLTAGE | 80009 | 155-0289-01 |
| A3A1U458 | 155-0289-02 | 671-0100-05 | | IC,ASIC:BIPOLAR,5 BIT A/D CONVERTOR;FULL CU STOM,M233;,CLCC68,TUBE | 80009 | 155-0289-02 |
| | | | | *MOUNTING PARTS* | | |
| | 136-0813-00 | | | SKT,PL-IN ELEK:CHIP CARRIER,68 CONTACTS | 80009 | 136-0813-00 |
| | 214-4011-00 | | | HT SK,MICROCKT:STEEL,ASTM,B449 | 80009 | 214-4011-00 |
| | | | | *END MOUNTING PARTS* | | |

| Component No. | Tektronix Part No. | Serial/Assembly No. Effective | Dscont | Name & Description | Mfr. Code | Mfr. Part No. |
|---|---|---|---|---|---|---|
| A3A1U565 | 155-0277-00 | 671-0100-03 | 671-0100-03 | MICROCKT,LINEAR:SUMMING AMPLIFIER | 80009 | 155-0277-00 |
| A3A1U565 | 155-0277-01 | 671-0100-04 | | IC,ASIC:BIPOLAR,AMPLIFIER;SUMING AMP M232;, DIP16,TUBE | 80009 | 155-0277-01 |
| | | | | *MOUNTING PARTS* | | |
| | 136-0971-00 | | | SKT,PL-IN ELEK:DIP,16 PIN,2 X 8,0.3 X 0.1 S P,T/G,0.095 H X 0.1 TAIL | 80009 | 136-0971-00 |
| | | | | *END MOUNTING PARTS* | | |
| A3A1U575 | 156-1984-00 | | | IC,LINEAR:BIPOLAR,OP-AMP;UNITY GAIN FOLLOWE R/BUFFER,250MHZ,80MA;HA-5033,DIP08.3 | 34371 | HA-5033 |
| A3A1U578 | 155-0289-01 | 671-0100-03 | 671-0100-04 | MICROCKT,DGTL:A-D CONV,0.25V REF VOLTAGE | 80009 | 155-0289-01 |
| A3A1U578 | 155-0289-02 | 671-0100-05 | | IC,ASIC:BIPOLAR,5 BIT A/D CONVERTOR;FULL CU STOM,M233;,CLCC68,TUBE | 80009 | 155-0289-02 |
| | | | | *MOUNTING PARTS* | | |
| | 136-0813-00 | | | SKT,PL-IN ELEK:CHIP CARRIER,68 CONTACTS | 80009 | 136-0813-00 |
| | 214-4011-00 | | | HT SK,MICROCKT:STEEL,ASTM,B449 | 80009 | 214-4011-00 |
| | | | | *END MOUNTING PARTS* | | |
| A3A1U622 | 165-2243-00 | | | MICROCKT,LINEAR:OP-AMP | 80009 | 165-2243-00 |
| | | | | *ATTACHED PARTS* | | |
| | 337-3160-00 | | | SHIELD,ELEC:CIRCUIT BOARD | 80009 | 337-3160-00 |
| | | | | *END ATTACHED PARTS* | | |
| A3A1U642 | 155-0290-01 | 671-0100-03 | 671-0100-04 | MICROCKT,DGTL:A-D CONVERTER,1V REF VOLTAGE | 80009 | 155-0290-01 |
| A3A1U642 | 155-0290-02 | 671-0100-05 | | IC,ASIC:BIPOLAR,5 BIT D/A CONVERTOR;FULL CU STOM,M369;,CLCC68,TUBE | 80009 | 155-0290-02 |
| | | | | *MOUNTING PARTS* | | |
| | 136-0813-00 | | | SKT,PL-IN ELEK:CHIP CARRIER,68 CONTACTS | 80009 | 136-0813-00 |
| | 214-3503-01 | | | HT SK,MICROCKT:ALUMINUM | 80009 | 214-3503-01 |
| | | | | *END MOUNTING PARTS* | | |
| A3A1U652 | 155-0282-00 | | | MICROCKT,DGTL:DIGITAL TO ANALOG CONVERTER M 219B | 80009 | 155-0282-00 |
| | | | | *MOUNTING PARTS* | | |
| | 136-0972-00 | | | SOCKET,DIP: | 80009 | 136-0972-00 |
| | | | | *END MOUNTING PARTS* | | |
| A3A1U654 | 156-0543-00 | | | IC,DIGITAL:ECL,BUFFER;HEX, WITH ENABLE;1018 8,DIP16.3,TUBE | 18324 | 10188N |
| A3A1U684 | 156-1582-00 | | | IC,LINEAR:BIPOLAR,OP-AMP;LOW OFFSET VOLTAGE ;OP07CN,DIP08.3 | 80009 | 156-1582-00 |
| A3A1U778 | 156-0846-00 | | | IC,LINEAR:BIPOLAR,VOLTAGE REGULATOR;NEGATIV E,-5.0V,1.0A,4.0%;MC7905CT,TO-220 | 01295 | UA7905CKC |
| | | | | *MOUNTING PARTS* | | |
| | 210-0586-00 | | | NUT,PL,ASSEM WA:4-40 X 0.25,STL CD PL | 78189 | 211-041800-00 |
| | 211-0008-00 | | | SCREW,MACHINE:4-40 X 0.25,PNH,STL | 93907 | ORDER BY DESCR |
| | | | | *END MOUNTING PARTS* | | |
| A3A1U789 | 156-0158-00 | | | IC,LINEAR:BIPOLAR,OP-AMP;DUAL;MC1458P1,DIP0 8.3 | 80009 | 156-0158-00 |
| A3A1U893 | 156-1322-00 | | | IC,LINEAR:BIPOLAR,VOLTAGE REFERENCE;POSITIV E,10V,0.05%,5PPM,SERIES;AD581LH,TO-39 | TK1468 | LT1031BCH-R |
| A3A1U962 | 156-0277-00 | | | IC,LINEAR:BIPOLAR,VOLTAGE REGULATOR;POSITIV E,5.0V,1.0A,4%;MC7805CT,TO-220 | 80009 | 156-0277-00 |
| | | | | *MOUNTING PARTS* | | |
| | 210-0586-00 | | | NUT,PL,ASSEM WA:4-40 X 0.25,STL CD PL | 78189 | 211-041800-00 |
| | 211-0008-00 | | | SCREW,MACHINE:4-40 X 0.25,PNH,STL | 93907 | ORDER BY DESCR |
| | | | | *END MOUNTING PARTS* | | |
| A3A1U982 | 156-0067-00 | | | IC,LINEAR:BIPOLAR,OP-AMP;;741C,DIP08.3 | 80009 | 156-0067-00 |
| A3A1VR515 | 152-0757-00 | | | DIODE,ZENER:,;6.2V,5%,1W;1N4735A,DO-41,TR | 80009 | 152-0757-00 |
| A3A1VR524 | 152-0757-00 | | | DIODE,ZENER:,;6.2V,5%,1W;1N4735A,DO-41,TR | 80009 | 152-0757-00 |
| A3A1VR583 | 152-0278-00 | | | DIODE,ZENER:,;3V,5%,0.4W;1N4372A,DO-35 OR 7 ,TR | 80009 | 152-0278-00 |
| A3A1VR586 | 152-0278-00 | | | DIODE,ZENER:,;3V,5%,0.4W;1N4372A,DO-35 OR 7 ,TR | 80009 | 152-0278-00 |
| A3A1W334 | 131-0566-00 | | | BUS,CONDUCTOR:DUMMY RES,0.094 OD X 0.225 L | 80009 | 131-0566-00 |
| A3A1W335 | 131-0566-00 | | | BUS,CONDUCTOR:DUMMY RES,0.094 OD X 0.225 L | 80009 | 131-0566-00 |

| Component No. | Tektronix Part No. | Serial/Assembly No. Effective | Dscont | Name & Description | Mfr. Code | Mfr. Part No. |
|---|---|---|---|---|---|---|
| A3A1A1 | 671-0110-01 | | | CIRCUIT BD ASSY:VIDEO DELAY LINE | 80009 | 671-0110-01 |
| A3A1A1C100 | 283-0644-00 | | | CAP,FXD,MICA DI:150PF,1%,500V | 80009 | 283-0644-00 |
| A3A1A1C114 | 283-0181-00 | | | CAP,FXD,CER DI:1.8PF,+/-0.1%,100V | 80009 | 283-0181-00 |
| A3A1A1C115 | 283-0743-00 | | | CAP,FXD,MICA DI:43PF,2%,500V | 80009 | 283-0743-00 |
| A3A1A1C200 | 283-0632-00 | | | CAP,FXD,MICA DI:87PF,1%,500V | 80009 | 283-0632-00 |
| A3A1A1C201 | 283-0743-00 | | | CAP,FXD,MICA DI:43PF,2%,500V | 80009 | 283-0743-00 |
| A3A1A1C204 | 283-0644-00 | | | CAP,FXD,MICA DI:150PF,1%,500V | 80009 | 283-0644-00 |
| A3A1A1C212 | 283-0181-00 | | | CAP,FXD,CER DI:1.8PF,+/-0.1%,100V | 80009 | 283-0181-00 |
| A3A1A1J110 | 136-0263-04 | | | SOCKET,PIN TERM:U/W 0.025 SQ PIN | 80009 | 136-0263-04 |
| A3A1A1J112 | 136-0263-04 | | | SOCKET,PIN TERM:U/W 0.025 SQ PIN | 80009 | 136-0263-04 |
| A3A1A1J214 | 136-0263-04 | | | SOCKET,PIN TERM:U/W 0.025 SQ PIN | 80009 | 136-0263-04 |
| A3A1A1J216 | 136-0263-04 | | | SOCKET,PIN TERM:U/W 0.025 SQ PIN | 80009 | 136-0263-04 |
| A3A1A1L101 | 108-0436-00 | | | COIL,RF:FIXED,240UH ON FORM | 80009 | 108-0436-00 |
| A3A1A1L105 | 114-0424-00 | | | COIL,RF:VAR,1.16UH PRESET | TK1345 | TO BE ASSIGNED |
| A3A1A1L203 | 108-0181-01 | | | COIL,RF:FIXED,165NH | TK1345 | 108-0181-01 |
| A3A1A1L211 | 114-0424-00 | | | COIL,RF:VAR,1.16UH PRESET | TK1345 | TO BE ASSIGNED |

| Component No. | Tektronix Part No. | Serial/Assembly No. Effective | Dscont | Name & Description | Mfr. Code | Mfr. Part No. |
|---|---|---|---|---|---|---|
| A3A1A2 | 671-0101-02 | | | CIRCUIT BD ASSY:REFERENCE GEN | 80009 | 671-0101-02 |
| A3A1A2C116 | 281-0775-01 | | | CAP,FXD,CER DI:0.1UF,20%,50V | 04222 | SA105E104MAA |
| A3A1A2C211 | 290-0523-00 | | | CAP,FXD,ELCTLT:2.2UF,20%,20V | 80009 | 290-0523-00 |
| A3A1A2C212 | 290-0523-00 | | | CAP,FXD,ELCTLT:2.2UF,20%,20V | 80009 | 290-0523-00 |
| A3A1A2C213 | 281-0775-01 | | | CAP,FXD,CER DI:0.1UF,20%,50V | 04222 | SA105E104MAA |
| A3A1A2P119 | 131-1425-00 | | | CONN,HDR:PCB,;MALE,RTANG,1 X 36,0.1 CTR,0.230 MLG X 0.090 TAIL,30 GOLD,STACKABLE;, | 22526 | 65521-136 |
| A3A1A2P119 | 131-1426-00 | | | CONN,HDR:PCB,;MALE,RTANG,1 X 36,0.1 CTR,0.23 MLG X 0.195 TAIL,GOLD,STACKABLE;, | 22526 | 65524-136 |
| A3A1A2R111 | 322-3508-07 | | | RES,FXD,FILM:44.44K OHM,0.1%,0.2W,TC=T9 TAPED & REELED,SMALL BODY | 91637 | 44.44K OHM |
| A3A1A2R112 | 322-3504-07 | | | RES,FXD,FILM:200.0K OHM,0.1%,0.2W,TC=T9 TAPED & REELED,SMALL BODY | 91637 | 200.0K OHM |
| A3A1A2R113 | 311-1338-00 | | | RES,VAR,NONWW:TRMR,20K OHM,0.75W | 02111 | 43P203T672 |
| A3A1A2R115 | 322-3485-07 | | | RES,FXD,FILM:5K OHM,0.1%,0.2W,TC=T9 | 91637 | CCF501C50000B |
| A3A1A2R116 | 322-3501-07 | | | RES,FXD,FILM:4.53K OHM,0.1%,0.2W,TC=T9 | 91637 | 4.53K OHM |
| A3A1A2R117 | 322-3504-07 | | | RES,FXD,FILM:200.0K OHM,0.1%,0.2W,TC=T9 TAPED & REELED,SMALL BODY | 91637 | 200.0K OHM |
| A3A1A2R118 | 322-3518-09 | | | RES,FXD,FILM:1.87K OHM,1%,0.2W,TC=T9 | 80009 | 322-3518-09 |
| A3A1A2R211 | 315-0131-00 | | | RES,FXD,FILM:130 OHM,5%,0.25W | 80009 | 315-0131-00 |
| A3A1A2R212 | 315-0102-00 | | | RES,FXD,FILM:1K OHM,5%,0.25W | 80009 | 315-0102-00 |
| A3A1A2R213 | 315-0131-00 | | | RES,FXD,FILM:130 OHM,5%,0.25W | 80009 | 315-0131-00 |
| A3A1A2R214 | 315-0102-00 | | | RES,FXD,FILM:1K OHM,5%,0.25W | 80009 | 315-0102-00 |
| A3A1A2R215 | 322-3506-07 | | | RES,FXD,FILM:100.0K OHM,0.1%,0.2W,TC=T9 TAPED & REELED,SMALL BODY | 91637 | 100.0K OHM |
| A3A1A2R216 | 322-3503-07 | | | RES,FXD,FILM:10.20K OHM,0.1%,0.2W,TC=T9 TAPED & REELED,SMALL BODY | 91637 | 10.20K OHM |
| A3A1A2U116 | 156-2702-00 | | | IC,LINEAR:BIPOLAR,OP-AMP;DUAL,HIGH OUTPUT CURRENT;4560,DIP08.3 | 80009 | 156-2702-00 |

| Component No. | Tektronix Part No. | Serial/Assembly No. Effective | Dscont | Name & Description | Mfr. Code | Mfr. Part No. |
|---|---|---|---|---|---|---|
| A3A1A3 | 671-0122-01 | | | CIRCUIT BD ASSY:REFERENCE GEN | 80009 | 671-0122-01 |
| A3A1A3C116 | 281-0775-01 | | | CAP,FXD,CER DI:0.1UF,20%,50V | 04222 | SA105E104MAA |
| A3A1A3C211 | 290-0523-00 | | | CAP,FXD,ELCTLT:2.2UF,20%,20V | 80009 | 290-0523-00 |
| A3A1A3C212 | 290-0523-00 | | | CAP,FXD,ELCTLT:2.2UF,20%,20V | 80009 | 290-0523-00 |
| A3A1A3C213 | 281-0775-01 | | | CAP,FXD,CER DI:0.1UF,20%,50V | 04222 | SA105E104MAA |
| A3A1A3P119 | 131-1425-00 | | | CONN,HDR:PCB,;MALE,RTANG,1 X 36,0.1 CTR,0.230 MLG X 0.090 TAIL,30 GOLD;STACKABLE;,, | 22526 | 65521-136 |
| A3A1A3P119 | 131-1426-00 | | | CONN,HDR:PCB,;MALE,RTANG,1 X 36,0.1 CTR,0.23 MLG X 0.195 TAIL,GOLD,STACKABLE;,, | 22526 | 65524-136 |
| A3A1A3R111 | 322-3498-07 | | | RES,FXD,FILM:38.25K OHM,0.1%,0.2W,TC=T9 TAPED & REELED,SMALL BODY | 91637 | 38.25K OHM |
| A3A1A3R112 | 322-3510-07 | | | RES,FXD,FILM:68.1K OHM,0.1%,0.2W,TC=T9 | 91637 | 68.1 |
| A3A1A3R114 | 311-1338-00 | | | RES,VAR,NONWW:TRMR,20K OHM,0.75W | 02111 | 43P203T672 |
| A3A1A3R115 | 322-3507-07 | | | RES,FXD,FILM:2.056K OHM,0.1%,0.2W,TC=T9 TAPED & REELED,SMALL BODY | 91637 | 2.056K OHM |
| A3A1A3R116 | 322-3499-07 | | | RES,FXD,FILM:1.96K OHM,0.1%,0.2W,TC=T9 | 91637 | 1.96K OHM |
| A3A1A3R117 | 322-3504-07 | | | RES,FXD,FILM:200.0K OHM,0.1%,0.2W,TC=T9 TAPED & REELED,SMALL BODY | 91637 | 200.0K OHM |
| A3A1A3R118 | 315-0222-00 | | | RES,FXD,FILM:2.2K OHM,5%,0.25W | 80009 | 315-0222-00 |
| A3A1A3R212 | 315-0102-00 | | | RES,FXD,FILM:1K OHM,5%,0.25W | 80009 | 315-0102-00 |
| A3A1A3R214 | 315-0102-00 | | | RES,FXD,FILM:1K OHM,5%,0.25W | 80009 | 315-0102-00 |
| A3A1A3R216 | 315-0222-00 | | | RES,FXD,FILM:2.2K OHM,5%,0.25W | 80009 | 315-0222-00 |
| A3A1A3U116 | 156-2702-00 | | | IC,LINEAR:BIPOLAR,OP-AMP;DUAL,HIGH OUTPUT CURRENT;4560,DIP08.3 | 80009 | 156-2702-00 |

| Component No. | Tektronix Part No. | Serial/Assembly No. Effective | Dscont | Name & Description | Mfr. Code | Mfr. Part No. |
|---|---|---|---|---|---|---|
| A3A1A4 | 671-0123-01 | | | CIRCUIT BD ASSY:REFERENCE GEN | 80009 | 671-0123-01 |
| A3A1A4C116 | 281-0775-01 | | | CAP,FXD,CER DI:0.1UF,20%,50V | 04222 | SA105E104MAA |
| A3A1A4C211 | 290-0523-00 | | | CAP,FXD,ELCTLT:2.2UF,20%,20V | 80009 | 290-0523-00 |
| A3A1A4C212 | 290-0523-00 | | | CAP,FXD,ELCTLT:2.2UF,20%,20V | 80009 | 290-0523-00 |
| A3A1A4C213 | 281-0775-01 | | | CAP,FXD,CER DI:0.1UF,20%,50V | 04222 | SA105E104MAA |
| A3A1A4P119 | 131-1425-00 | | | CONN,HDR:PCB,;MALE,RTANG,1 X 36,0.1 CTR,0.230 MLG X 0.090 TAIL,30 GOLD,STACKABLE;,, | 22526 | 65521-136 |
| A3A1A4P119 | 131-1426-00 | | | CONN,HDR:PCB,;MALE,RTANG,1 X 36,0.1 CTR,0.23 MLG X 0.195 TAIL,GOLD,STACKABLE;,, | 22526 | 65524-136 |
| A3A1A4R111 | 322-3504-07 | | | RES,FXD,FILM:200.0K OHM,0.1%,0.2W,TC=T9 TAPED & REELED,SMALL BODY | 91637 | 200.0K OHM |
| A3A1A4R113 | 311-1338-00 | | | RES,VAR,NONWW:TRMR,20K OHM,0.75W | 02111 | 43P203T672 |
| A3A1A4R114 | 311-1338-00 | | | RES,VAR,NONWW:TRMR,20K OHM,0.75W | 02111 | 43P203T672 |
| A3A1A4R115 | 315-0222-00 | | | RES,FXD,FILM:2.2K OHM,5%,0.25W | 80009 | 315-0222-00 |
| A3A1A4R116 | 315-0222-00 | | | RES,FXD,FILM:2.2K OHM,5%,0.25W | 80009 | 315-0222-00 |
| A3A1A4R117 | 322-3511-07 | | | RES,FXD,FILM:113.0K OHM,0.1%,0.2W,TC=T9 TAPED & REELED,SMALL BODY | 91637 | 113.0 |
| A3A1A4R118 | 322-3500-07 | | | RES,FXD,FILM:2.10K OHM,0.1%,0.2W,TC=T9 | 91637 | 2.10K OHM |
| A3A1A4R212 | 315-0102-00 | | | RES,FXD,FILM:1K OHM,5%,0.25W | 80009 | 315-0102-00 |
| A3A1A4R214 | 315-0102-00 | | | RES,FXD,FILM:1K OHM,5%,0.25W | 80009 | 315-0102-00 |
| A3A1A4R215 | 322-3512-07 | | | RES,FXD,FILM:42.05K OHM,0.1%,0.2W,TC=T9 TAPED & REELED,SMALL BODY | 91637 | 42.05K OHM |
| A3A1A4R216 | 322-3509-07 | | | RES,FXD,FILM:2.162K OHM,0.1%,0.2W,TC=T9 TAPED & REELED,SMALL BODY | 91637 | 2.162K OHM |
| A3A1A4U116 | 156-2702-00 | | | IC,LINEAR:BIPOLAR,OP-AMP;DUAL,HIGH OUTPUT CURRENT;4560,DIP08.3 | 80009 | 156-2702-00 |

| Component No. | Tektronix Part No. | Serial/Assembly No. Effective | Dscont | Name & Description | Mfr. Code | Mfr. Part No. |
|---|---|---|---|---|---|---|
| A3A1A5 | 671-1510-00 | | | CIRCUIT BD ASSY:PAL,ADC FILTER | 80009 | 671-1510-00 |
| A3A1A5C715 | 283-0649-00 | | | CAP,FXD,MICA DI:105PF,1%,500V | 80009 | 283-0649-00 |
| A3A1A5C717 | 283-0672-00 | | | CAP,FXD,MICA DI:200PF,1%,500V | 80009 | 283-0672-00 |
| A3A1A5C718 | 283-0728-00 | | | CAP,FXD,MICA DI:120PF,1%,500V | 80009 | 283-0728-00 |
| A3A1A5C719 | 283-0631-00 | | | CAP,FXD,MICA DI:95PF,1%,500V | 80009 | 283-0631-00 |
| A3A1A5C720 | 283-0668-00 | | | CAP,FXD,MICA DI:184PF,1%,100V | 80009 | 283-0668-00 |
| A3A1A5C730 | 283-0768-00 | | | CAP,FXD,MICA DI:132 PF,1%,500V | 80009 | 283-0768-00 |
| A3A1A5C734 | 283-0766-00 | | | CAP,FXD,MICA DI:47 PF,1%,500V | 80009 | 283-0766-00 |
| A3A1A5C735 | 283-0669-00 | | | CAP,FXD,MICA DI:360PF,1%,500V | 80009 | 283-0669-00 |
| A3A1A5C736 | 283-0791-00 | | | CAP,FXD,MICA DI:156PF,1%,500V | 80009 | 283-0791-00 |
| A3A1A5C740 | 283-0691-00 | | | CAP,FXD,MICA DI:650PF,1%,300V | 80009 | 283-0691-00 |
| A3A1A5C743 | 283-0632-00 | | | CAP,FXD,MICA DI:87PF,1%,500V | 80009 | 283-0632-00 |
| A3A1A5C745 | 283-0665-00 | | | CAP,FXD,MICA DI:190PF,1%,100V | 80009 | 283-0665-00 |
| A3A1A5C747 | 283-0693-00 | | | CAP,FXD,MICA DI:1730PF,1%,500V | 80009 | 283-0693-00 |
| A3A1A5C756 | 283-0780-00 | | | CAP,FXD,MICA DI:125PF,1%,500V | 00853 | D155F1250F0 |
| A3A1A5C765 | 283-0768-00 | | | CAP,FXD,MICA DI:132 PF,1%,500V | 80009 | 283-0768-00 |
| A3A1A5J710 | 136-0263-04 | | | SOCKET,PIN TERM:U/W 0.025 SQ PIN (QUANTITY 2) | 80009 | 136-0263-04 |
| A3A1A5J750 | 131-0608-00 | | | TERMINAL,PIN:0.365 L X 0.025 BRZ GLD PL (QUANTITY 3) | 80009 | 131-0608-00 |
| A3A1A5J752 | 131-0608-00 | | | TERMINAL,PIN:0.365 L X 0.025 BRZ GLD PL (QUANTITY 3) | 80009 | 131-0608-00 |
| A3A1A5J755 | 131-0608-00 | | | TERMINAL,PIN:0.365 L X 0.025 BRZ GLD PL (QUANTITY 3) | 80009 | 131-0608-00 |
| A3A1A5J759 | 131-0608-00 | | | TERMINAL,PIN:0.365 L X 0.025 BRZ GLD PL (QUANTITY 3) | 80009 | 131-0608-00 |
| A3A1A5J765 | 131-0391-00 | | | CONN,RF JACK: | 80009 | 131-0391-00 |
| A3A1A5L720 | 114-0453-00 | | | COIL,RF:VAR,1.31UH-1.44UH,POT CORE | 54937 | 500-4731 |
| A3A1A5L729 | 114-0453-00 | | | COIL,RF:VAR,1.31UH-1.44UH,POT CORE | 54937 | 500-4731 |
| A3A1A5L730 | 114-0450-00 | | | COIL,RF:VAR,1.91UH-2.11UH,POT CORE | 54937 | 500-4728 |
| A3A1A5L737 | 114-0451-00 | | | COIL,RF:VAR,0.780UH-0.862UH,POT CORE | 54937 | 500-4730 |
| A3A1A5L747 | 114-0452-00 | | | COIL,RF:VAR,0.654UH-0.722UH,POT CORE | 54937 | 500-4729 |
| A3A1A5P750 | 131-0993-00 | | | CONN,BOX:SHUNT/SHORTING,;FEMALE,STR,1 X 2,0 .1 CTR,0.385 H,30 GOLD,BLACK,JUMPER; | 22526 | 65474-006 |
| A3A1A5P752 | 131-0993-00 | | | CONN,BOX:SHUNT/SHORTING,;FEMALE,STR,1 X 2,0 .1 CTR,0.385 H,30 GOLD,BLACK,JUMPER; | 22526 | 65474-006 |
| A3A1A5P755 | 131-0993-00 | | | CONN,BOX:SHUNT/SHORTING,;FEMALE,STR,1 X 2,0 .1 CTR,0.385 H,30 GOLD,BLACK,JUMPER; | 22526 | 65474-006 |
| A3A1A5P759 | 131-0993-00 | | | CONN,BOX:SHUNT/SHORTING,;FEMALE,STR,1 X 2,0 .1 CTR,0.385 H,30 GOLD,BLACK,JUMPER; | 22526 | 65474-006 |
| A3A1A5T755 | 120-1779-00 | | | TRANSFORMER,RF:VAR,1.34-1.47UH | 54937 | 500-4306 |
| A3A1A5T765 | 120-1854-00 | | | TRANSFORMER,RF:VAR,2.55UH-2.81UH,POT CORE | 54937 | 500-4732 |

| Component No. | Tektronix Part No. | Serial/Assembly No. Effective | Dscont | Name & Description | Mfr. Code | Mfr. Part No. |
|---|---|---|---|---|---|---|
| A4 | 672-1295-03 | B022000 | B022030 | CIRCUIT BD ASSY:FILTER SW | 80009 | 672-1295-03 |
| A4 | 672-1295-04 | B022031 | B022761 | CIRCUIT BD ASSY:FILTER SW | 80009 | 672-1295-04 |
| A4 | 672-1344-00 | B022762 | B023422 | CIRCUIT BD ASSY: | 80009 | 672-1344-00 |
| A4 | 672-1344-01 | B023423 | | CIRCUIT BD ASSY: | 80009 | 672-1344-01 |
| | | | | *ATTACHED PARTS* | | |
| | 211-0033-00 | B022000 | B022761 | SCR,ASSEM WSHR:4-40 X 0.312,PNH,STL,CD PL<br>(QUANTITY 2) | TK0435 | ORDER BY DESCR |
| | 343-1409-00 | B022000 | B022761 | RETAINER,CKT BD:4.05 X 0.5 X 0.125,PC<br>(QUANTITY 2) | 80009 | 343-1409-00 |
| | 361-0137-00 | B022000 | B022761 | SPACER,POST:1.345 L W/4-40 THD EA END,ACETAL,0.25 OD | 80009 | 361-0137-00 |
| | 210-0004-00 | B022762 | | WASHER,LOCK:#4 INTL,0.015 THK,STL<br>(QUANTITY 2) | 77900 | 1204-00-00-0541C |
| | 211-0661-00 | B022762 | | SCR,ASSEM WSHR:4-40 X 0.25,PNH,STL,CD PL,POZ,MACHINE<br>(QUANTITY 4) | 01536 | 821-01655-024 |
| | 337-3739-00 | B022762 | | SHIELD,ELEC:FILTER BOARD | 80009 | 337-3739-00 |
| | 361-1590-00 | B022762 | | SPACER,STANDOFF:0.250 DIA X 1.375 L W/4-40 X 0.250 DP TAPPED HOLE BOTH ENDS,NYLON<br>(QUANTITY 2) | 80009 | 361-1590-00 |
| | 361-1591-00 | B022762 | | SPACER,STANDOFF:<br>(QUANTITY 2) | 80009 | 361-1591-00 |
| | | | | *END ATTACHED PARTS* | | |

| Component No. | Tektronix Part No. | Serial/Assembly No. Effective | Dscont | Name & Description | Mfr. Code | Mfr. Part No. |
|---|---|---|---|---|---|---|
| A4A1 | 671-0695-01 | 672-1295-03 | 672-1344-00 | CIRCUIT BD ASSY:FILTER | 80009 | 671-0695-01 |
| A4A1 | 671-0695-02 | 672-1344-01 | | CIRCUIT BD ASSY:FILTER | 80009 | 671-0695-02 |
| | | | | *ATTACHED PARTS* | | |
| | 210-0004-00 | | | WASHER,LOCK:#4 INTL,0.015 THK,STL (QUANTITY 2) | 77900 | 1204-00-00-0541C |
| | 210-0586-00 | | | NUT,PL,ASSEM WA:4-40 X 0.25,STL CD PL (QUANTITY 4) | 78189 | 211-041800-00 |
| | 211-0033-00 | | | SCR,ASSEM WSHR:4-40 X 0.312,PNH,STL,CD PL (QUANTITY 6) | TK0435 | ORDER BY DESCR |
| | 337-3160-00 | | | SHIELD,ELEC:CIRCUIT BOARD | 80009 | 337-3160-00 |
| | 351-0837-00 | | | GUIDE,CKT BD:3.935 X 1.35 X 0.55,PLASTIC (QUANTITY 2) | 80009 | 351-0837-00 |
| | 361-0137-00 | | | SPACER,POST:1.345 L W/4-40 THD EA END,ACETAL,0.25 OD (QUANTITY 2) | 80009 | 361-0137-00 |
| | | | | *END ATTACHED PARTS* | | |
| A4A1C114 | 290-0973-00 | | | CAP,FXD,ELCTLT:100UF,20%,25VDC | 24165 | 513D107M025BB4D |
| A4A1C116 | 290-0973-00 | | | CAP,FXD,ELCTLT:100UF,20%,25VDC | 24165 | 513D107M025BB4D |
| A4A1C128 | 290-0974-00 | | | CAP,FXD,ELCTLT:10UF,20%,50VDC | 55680 | UVX1H100MAA |
| A4A1C129 | 290-0974-00 | | | CAP,FXD,ELCTLT:10UF,20%,50VDC | 55680 | UVX1H100MAA |
| A4A1C230 | 290-0973-00 | | | CAP,FXD,ELCTLT:100UF,20%,25VDC | 24165 | 513D107M025BB4D |
| A4A1C231 | 290-0973-00 | | | CAP,FXD,ELCTLT:100UF,20%,25VDC | 24165 | 513D107M025BB4D |
| A4A1C239 | 290-0973-00 | | | CAP,FXD,ELCTLT:100UF,20%,25VDC | 24165 | 513D107M025BB4D |
| A4A1C249 | 290-0973-00 | | | CAP,FXD,ELCTLT:100UF,20%,25VDC | 24165 | 513D107M025BB4D |
| A4A1C321 | 281-0775-02 | | | CAP,FXD,CERAMIC:MLC;0.1UF,20%,50V,X7R,0.265 X 0.100;AXIAL,T&R | 04222 | SA205C104MAA |
| A4A1C322 | 281-0775-02 | | | CAP,FXD,CERAMIC:MLC;0.1UF,20%,50V,X7R,0.265 X 0.100;AXIAL,T&R | 04222 | SA205C104MAA |
| A4A1C331 | 281-0775-02 | | | CAP,FXD,CERAMIC:MLC;0.1UF,20%,50V,X7R,0.265 X 0.100;AXIAL,T&R | 04222 | SA205C104MAA |
| A4A1C332 | 281-0775-02 | | | CAP,FXD,CERAMIC:MLC;0.1UF,20%,50V,X7R,0.265 X 0.100;AXIAL,T&R | 04222 | SA205C104MAA |
| A4A1C342 | 281-0775-02 | | | CAP,FXD,CERAMIC:MLC;0.1UF,20%,50V,X7R,0.265 X 0.100;AXIAL,T&R | 04222 | SA205C104MAA |
| A4A1C351 | 281-0757-00 | | | CAP,FXD,CER DI:10PF,20%,100V TUBULAR,MI | 80009 | 281-0757-00 |
| A4A1C384 | 290-0973-00 | | | CAP,FXD,ELCTLT:100UF,20%,25VDC | 24165 | 513D107M025BB4D |
| A4A1C397 | 281-0775-02 | | | CAP,FXD,CERAMIC:MLC;0.1UF,20%,50V,X7R,0.265 X 0.100;AXIAL,T&R | 04222 | SA205C104MAA |
| A4A1C413 | 290-0973-00 | | | CAP,FXD,ELCTLT:100UF,20%,25VDC | 24165 | 513D107M025BB4D |
| A4A1C415 | 290-0973-00 | | | CAP,FXD,ELCTLT:100UF,20%,25VDC | 24165 | 513D107M025BB4D |
| A4A1C429 | 281-0775-02 | | | CAP,FXD,CERAMIC:MLC;0.1UF,20%,50V,X7R,0.265 X 0.100;AXIAL,T&R | 04222 | SA205C104MAA |
| A4A1C436 | 281-0123-00 | | | CAP,VAR,CER DI:5-25PF,100V | 59660 | 518-000A5-25 |
| A4A1C439 | 281-0775-02 | | | CAP,FXD,CERAMIC:MLC;0.1UF,20%,50V,X7R,0.265 X 0.100;AXIAL,T&R | 04222 | SA205C104MAA |
| A4A1C441 | 281-0757-00 | | | CAP,FXD,CER DI:10PF,20%,100V TUBULAR,MI | 80009 | 281-0757-00 |
| A4A1C456 | 283-0615-00 | | | CAP,FXD,MICA DI:33PF,5%,500V | 80009 | 283-0615-00 |
| A4A1C465 | 281-0123-00 | | | CAP,VAR,CER DI:5-25PF,100V | 59660 | 518-000A5-25 |
| A4A1C547 | 281-0775-02 | | | CAP,FXD,CERAMIC:MLC;0.1UF,20%,50V,X7R,0.265 X 0.100;AXIAL,T&R | 04222 | SA205C104MAA |
| A4A1C578 | 281-0775-02 | | | CAP,FXD,CERAMIC:MLC;0.1UF,20%,50V,X7R,0.265 X 0.100;AXIAL,T&R | 04222 | SA205C104MAA |
| A4A1C595 | 281-0775-02 | | | CAP,FXD,CERAMIC:MLC;0.1UF,20%,50V,X7R,0.265 X 0.100;AXIAL,T&R | 04222 | SA205C104MAA |
| A4A1C611 | 281-0893-00 | | | CAP,FXD,CER DI:4.7PF,+/-0.5PF,100V | 04222 | SA101A4R7DAA |
| A4A1C617 | 281-0775-02 | | | CAP,FXD,CERAMIC:MLC;0.1UF,20%,50V,X7R,0.265 X 0.100;AXIAL,T&R | 04222 | SA205C104MAA |
| A4A1C628 | 281-0893-00 | | | CAP,FXD,CER DI:4.7PF,+/-0.5PF,100V | 04222 | SA101A4R7DAA |
| A4A1C639 | 281-0893-00 | | | CAP,FXD,CER DI:4.7PF,+/-0.5PF,100V | 04222 | SA101A4R7DAA |
| A4A1C655 | 281-0893-00 | | | CAP,FXD,CER DI:4.7PF,+/-0.5PF,100V | 04222 | SA101A4R7DAA |

| Component No. | Tektronix Part No. | Serial/Assembly No. Effective | Dscont | Name & Description | Mfr. Code | Mfr. Part No. |
|---|---|---|---|---|---|---|
| A4A1C657 | 281-0775-02 | | | CAP,FXD,CERAMIC:MLC;0.1UF,20%,50V,X7R,0.265 X 0.100;AXIAL,T&R | 04222 | SA205C104MAA |
| A4A1C664 | 281-0893-00 | | | CAP,FXD,CER DI:4.7PF,+/-0.5PF,100V | 04222 | SA101A4R7DAA |
| A4A1C683 | 281-0893-00 | | | CAP,FXD,CER DI:4.7PF,+/-0.5PF,100V | 04222 | SA101A4R7DAA |
| A4A1C685 | 281-0775-02 | | | CAP,FXD,CERAMIC:MLC;0.1UF,20%,50V,X7R,0.265 X 0.100;AXIAL,T&R | 04222 | SA205C104MAA |
| A4A1C748 | 281-0775-02 | | | CAP,FXD,CERAMIC:MLC;0.1UF,20%,50V,X7R,0.265 X 0.100;AXIAL,T&R | 04222 | SA205C104MAA |
| A4A1C777 | 281-0775-02 | | | CAP,FXD,CERAMIC:MLC;0.1UF,20%,50V,X7R,0.265 X 0.100;AXIAL,T&R | 04222 | SA205C104MAA |
| A4A1C835 | 281-0893-00 | | | CAP,FXD,CER DI:4.7PF,+/-0.5PF,100V | 04222 | SA101A4R7DAA |
| A4A1C847 | 281-0775-02 | | | CAP,FXD,CERAMIC:MLC;0.1UF,20%,50V,X7R,0.265 X 0.100;AXIAL,T&R | 04222 | SA205C104MAA |
| A4A1C853 | 281-0893-00 | | | CAP,FXD,CER DI:4.7PF,+/-0.5PF,100V | 04222 | SA101A4R7DAA |
| A4A1C864 | 281-0893-00 | | | CAP,FXD,CER DI:4.7PF,+/-0.5PF,100V | 04222 | SA101A4R7DAA |
| A4A1C877 | 281-0775-02 | | | CAP,FXD,CERAMIC:MLC;0.1UF,20%,50V,X7R,0.265 X 0.100;AXIAL,T&R | 04222 | SA205C104MAA |
| A4A1C883 | 281-0893-00 | | | CAP,FXD,CER DI:4.7PF,+/-0.5PF,100V | 04222 | SA101A4R7DAA |
| A4A1C892 | 281-0775-02 | | | CAP,FXD,CERAMIC:MLC;0.1UF,20%,50V,X7R,0.265 X 0.100;AXIAL,T&R | 04222 | SA205C104MAA |
| A4A1C911 | 281-0893-00 | | | CAP,FXD,CER DI:4.7PF,+/-0.5PF,100V | 04222 | SA101A4R7DAA |
| A4A1C913 | 281-0775-02 | | | CAP,FXD,CERAMIC:MLC;0.1UF,20%,50V,X7R,0.265 X 0.100;AXIAL,T&R | 04222 | SA205C104MAA |
| A4A1CR211 | 152-0040-00 | | | DIODE,RECT:,;600V,1A,50A IFSM;1N5061,DO-41, TR | 80009 | 152-0040-00 |
| A4A1CR232 | 152-0040-00 | | | DIODE,RECT:,;600V,1A,50A IFSM;1N5061,DO-41, TR | 80009 | 152-0040-00 |
| A4A1CR234 | 152-0040-00 | | | DIODE,RECT:,;600V,1A,50A IFSM;1N5061,DO-41, TR | 80009 | 152-0040-00 |
| A4A1CR235 | 152-0040-00 | | | DIODE,RECT:,;600V,1A,50A IFSM;1N5061,DO-41, TR | 80009 | 152-0040-00 |
| A4A1CR335 | 152-0141-02 | | | DIODE,SIG:,ULTRA FAST;40V,150MA,4NS,2PF;1N4152,DO-35,T&R | 80009 | 152-0141-02 |
| A4A1CR336 | 152-0141-02 | | | DIODE,SIG:,ULTRA FAST;40V,150MA,4NS,2PF;1N4152,DO-35,T&R | 80009 | 152-0141-02 |
| A4A1CR536 | 152-0141-02 | | | DIODE,SIG:,ULTRA FAST;40V,150MA,4NS,2PF;1N4152,DO-35,T&R | 80009 | 152-0141-02 |
| A4A1CR537 | 152-0141-02 | | | DIODE,SIG:,ULTRA FAST;40V,150MA,4NS,2PF;1N4152,DO-35,T&R | 80009 | 152-0141-02 |
| A4A1CR561 | 152-0141-02 | | | DIODE,SIG:,ULTRA FAST;40V,150MA,4NS,2PF;1N4152,DO-35,T&R | 80009 | 152-0141-02 |
| A4A1CR562 | 152-0141-02 | | | DIODE,SIG:,ULTRA FAST;40V,150MA,4NS,2PF;1N4152,DO-35,T&R | 80009 | 152-0141-02 |
| A4A1CR563 | 152-0141-02 | | | DIODE,SIG:,ULTRA FAST;40V,150MA,4NS,2PF;1N4152,DO-35,T&R | 80009 | 152-0141-02 |
| A4A1CR564 | 152-0141-02 | | | DIODE,SIG:,ULTRA FAST;40V,150MA,4NS,2PF;1N4152,DO-35,T&R | 80009 | 152-0141-02 |
| A4A1CR574 | 152-0141-02 | | | DIODE,SIG:,ULTRA FAST;40V,150MA,4NS,2PF;1N4152,DO-35,T&R | 80009 | 152-0141-02 |
| A4A1CR575 | 152-0141-02 | | | DIODE,SIG:,ULTRA FAST;40V,150MA,4NS,2PF;1N4152,DO-35,T&R | 80009 | 152-0141-02 |
| A4A1CR627 | 152-0141-02 | | | DIODE,SIG:,ULTRA FAST;40V,150MA,4NS,2PF;1N4152,DO-35,T&R | 80009 | 152-0141-02 |
| A4A1CR628 | 152-0141-02 | | | DIODE,SIG:,ULTRA FAST;40V,150MA,4NS,2PF;1N4152,DO-35,T&R | 80009 | 152-0141-02 |
| A4A1J148 | 131-4136-00 | 671-0695-01 | 671-0695-01 | CONN,HDR PWR:PCB,;MALE,STR,1 X 10,0.156 CTR ,0.450 MLG X 0.172 TAIL,0.045 SQ,GOLD;,, | 27264 | 26-48-2101 |
| A4A1J148 | 131-4884-00 | 671-0695-02 | | CONN,HDR PWR: | 80009 | 131-4884-00 |
| A4A1J415 | 131-0608-00 | | | TERMINAL,PIN:0.365 L X 0.025 BRZ GLD PL | 80009 | 131-0608-00 |

| Component No. | Tektronix Part No. | Serial/Assembly No. Effective | Dscont | Name & Description | Mfr. Code | Mfr. Part No. |
|---|---|---|---|---|---|---|
| | | | | (QUANTITY 2) | | |
| A4A1J418 | 131-0608-00 | | | TERMINAL,PIN:0.365 L X 0.025 BRZ GLD PL | 80009 | 131-0608-00 |
| | | | | (QUANTITY 2) | | |
| A4A1J529 | 131-0589-00 | | | TERMINAL,PIN: | 22526 | 48283-087 |
| | | | | (QUANTITY 5) | | |
| A4A1J539 | 131-0589-00 | | | TERMINAL,PIN: | 22526 | 48283-087 |
| | | | | (QUANTITY 5) | | |
| A4A1J549 | 131-0589-00 | | | TERMINAL,PIN: | 22526 | 48283-087 |
| | | | | (QUANTITY 5) | | |
| A4A1J569 | 131-0589-00 | | | TERMINAL,PIN: | 22526 | 48283-087 |
| | | | | (QUANTITY 5) | | |
| A4A1J589 | 131-0589-00 | | | TERMINAL,PIN: | 22526 | 48283-087 |
| | | | | (QUANTITY 5) | | |
| A4A1J712 | 131-0608-00 | | | TERMINAL,PIN:0.365 L X 0.025 BRZ GLD PL | 80009 | 131-0608-00 |
| | | | | (QUANTITY 3) | | |
| A4A1J729 | 131-0589-00 | | | TERMINAL,PIN: | 22526 | 48283-087 |
| | | | | (QUANTITY 5) | | |
| A4A1J739 | 131-0589-00 | | | TERMINAL,PIN: | 22526 | 48283-087 |
| | | | | (QUANTITY 5) | | |
| A4A1J749 | 131-0589-00 | | | TERMINAL,PIN: | 22526 | 48283-087 |
| | | | | (QUANTITY 5) | | |
| A4A1J769 | 131-0589-00 | | | TERMINAL,PIN: | 22526 | 48283-087 |
| | | | | (QUANTITY 5) | | |
| A4A1J789 | 131-0589-00 | | | TERMINAL,PIN: | 22526 | 48283-087 |
| | | | | (QUANTITY 5) | | |
| A4A1J795 | 174-0838-00 | | | CA ASSY,SP,ELEC:34,30 AWG,9.2 L,RIBBON | 80009 | 174-0838-00 |
| A4A1J829 | 131-0589-00 | | | TERMINAL,PIN: | 22526 | 48283-087 |
| | | | | (QUANTITY 5) | | |
| A4A1J839 | 131-0589-00 | | | TERMINAL,PIN: | 22526 | 48283-087 |
| | | | | (QUANTITY 5) | | |
| A4A1J849 | 131-0589-00 | | | TERMINAL,PIN: | 22526 | 48283-087 |
| | | | | (QUANTITY 5) | | |
| A4A1J869 | 131-0589-00 | | | TERMINAL,PIN: | 22526 | 48283-087 |
| | | | | (QUANTITY 5) | | |
| A4A1J889 | 131-0589-00 | | | TERMINAL,PIN: | 22526 | 48283-087 |
| | | | | (QUANTITY 5) | | |
| A4A1J915 | 131-0608-00 | | | TERMINAL,PIN:0.365 L X 0.025 BRZ GLD PL | 80009 | 131-0608-00 |
| | | | | (QUANTITY 2) | | |
| A4A1L354 | 108-0146-00 | | | COIL,RF: | 80009 | 108-0146-00 |
| A4A1L364 | 108-0422-00 | | | COIL,RF:FIXED,80UH | 80009 | 108-0422-00 |
| A4A1P528 | 131-0589-00 | | | TERMINAL,PIN: | 22526 | 48283-087 |
| | | | | (QUANTITY 15) | | |
| A4A1P538 | 131-0589-00 | | | TERMINAL,PIN: | 22526 | 48283-087 |
| | | | | (QUANTITY 15) | | |
| A4A1P558 | 131-0589-00 | | | TERMINAL,PIN: | 22526 | 48283-087 |
| | | | | (QUANTITY 15) | | |
| A4A1P568 | 131-0589-00 | | | TERMINAL,PIN: | 22526 | 48283-087 |
| | | | | (QUANTITY 15) | | |
| A4A1P578 | 131-0589-00 | | | TERMINAL,PIN: | 22526 | 48283-087 |
| | | | | (QUANTITY 15) | | |
| A4A1P712 | 131-0993-02 | | | BUS,CONDUCTOR:SHUNT ASSEMBLY,RED | 00779 | 1-850100-0 |
| A4A1Q344 | 151-1103-00 | | | TRANSISTOR,SIG:DMOSFET,N-CH;ENH,2V,50MA,45 OHM;SD210DE,TO-72 | 80009 | 151-1103-00 |
| A4A1Q346 | 151-1103-00 | | | TRANSISTOR,SIG:DMOSFET,N-CH;ENH,2V,50MA,45 OHM;SD210DE,TO-72 | 80009 | 151-1103-00 |
| A4A1Q451 | 151-0190-00 | | | TRANSISTOR,SIG:BIPOLAR,NPN;40V,200MA,300MHZ ,AMPLIFIER;2N3904,TO-92 EBC | 80009 | 151-0190-00 |
| A4A1Q453 | 151-0190-00 | | | TRANSISTOR,SIG:BIPOLAR,NPN;40V,200MA,300MHZ ,AMPLIFIER;2N3904,TO-92 EBC | 80009 | 151-0190-00 |
| A4A1Q514 | 151-0712-00 | | | TRANSISTOR,SIG:BIPOLAR,PNP;20V,50MA,600MHZ, AMPLIFIER;MPSH81,TO-92 BEC | 80009 | 151-0712-00 |

| Component No. | Tektronix Part No. | Serial/Assembly No. Effective | Dscont | Name & Description | Mfr. Code | Mfr. Part No. |
|---|---|---|---|---|---|---|
| A4A1Q526 | 151-0712-00 | | | TRANSISTOR,SIG:BIPOLAR,PNP;20V,50MA,600MHZ, AMPLIFIER;MPSH81,TO-92 BEC | 80009 | 151-0712-00 |
| A4A1Q549 | 151-0712-00 | | | TRANSISTOR,SIG:BIPOLAR,PNP;20V,50MA,600MHZ, AMPLIFIER;MPSH81,TO-92 BEC | 80009 | 151-0712-00 |
| A4A1Q579 | 151-0712-00 | | | TRANSISTOR,SIG:BIPOLAR,PNP;20V,50MA,600MHZ, AMPLIFIER;MPSH81,TO-92 BEC | 80009 | 151-0712-00 |
| A4A1Q645 | 151-0712-00 | | | TRANSISTOR,SIG:BIPOLAR,PNP;20V,50MA,600MHZ, AMPLIFIER;MPSH81,TO-92 BEC | 80009 | 151-0712-00 |
| A4A1Q675 | 151-0712-00 | | | TRANSISTOR,SIG:BIPOLAR,PNP;20V,50MA,600MHZ, AMPLIFIER;MPSH81,TO-92 BEC | 80009 | 151-0712-00 |
| A4A1Q714 | 151-0188-00 | | | TRANSISTOR,SIG:BIPOLAR,PNP;40V,200MA,250MHZ ,AMPLIFIER;2N3906,TO-92 EBC | 80009 | 151-0188-00 |
| A4A1Q734 | 151-0188-00 | | | TRANSISTOR,SIG:BIPOLAR,PNP;40V,200MA,250MHZ ,AMPLIFIER;2N3906,TO-92 EBC | 80009 | 151-0188-00 |
| A4A1Q764 | 151-0188-00 | | | TRANSISTOR,SIG:BIPOLAR,PNP;40V,200MA,250MHZ ,AMPLIFIER;2N3906,TO-92 EBC | 80009 | 151-0188-00 |
| A4A1Q812 | 151-0712-00 | | | TRANSISTOR,SIG:BIPOLAR,PNP;20V,50MA,600MHZ, AMPLIFIER;MPSH81,TO-92 BEC | 80009 | 151-0712-00 |
| A4A1Q835 | 151-0712-00 | | | TRANSISTOR,SIG:BIPOLAR,PNP;20V,50MA,600MHZ, AMPLIFIER;MPSH81,TO-92 BEC | 80009 | 151-0712-00 |
| A4A1Q856 | 151-0712-00 | | | TRANSISTOR,SIG:BIPOLAR,PNP;20V,50MA,600MHZ, AMPLIFIER;MPSH81,TO-92 BEC | 80009 | 151-0712-00 |
| A4A1Q865 | 151-0712-00 | | | TRANSISTOR,SIG:BIPOLAR,PNP;20V,50MA,600MHZ, AMPLIFIER;MPSH81,TO-92 BEC | 80009 | 151-0712-00 |
| A4A1Q885 | 151-0712-00 | | | TRANSISTOR,SIG:BIPOLAR,PNP;20V,50MA,600MHZ, AMPLIFIER;MPSH81,TO-92 BEC | 80009 | 151-0712-00 |
| A4A1Q923 | 151-0712-00 | | | TRANSISTOR,SIG:BIPOLAR,PNP;20V,50MA,600MHZ, AMPLIFIER;MPSH81,TO-92 BEC | 80009 | 151-0712-00 |
| A4A1Q925 | 151-0188-00 | | | TRANSISTOR,SIG:BIPOLAR,PNP;40V,200MA,250MHZ ,AMPLIFIER;2N3906,TO-92 EBC | 80009 | 151-0188-00 |
| A4A1Q954 | 151-0188-00 | | | TRANSISTOR,SIG:BIPOLAR,PNP;40V,200MA,250MHZ ,AMPLIFIER;2N3906,TO-92 EBC | 80009 | 151-0188-00 |
| A4A1Q982 | 151-0188-00 | | | TRANSISTOR,SIG:BIPOLAR,PNP;40V,200MA,250MHZ ,AMPLIFIER;2N3906,TO-92 EBC | 80009 | 151-0188-00 |
| A4A1R123 | 322-3133-00 | | | RES,FXD,FILM:237 OHM,1%,0.2W,TC=T0 | 91637 | CCF50-2F237R0F |
| A4A1R124 | 321-0140-00 | | | RES,FXD,FILM:280 OHM,1%,0.125W,TC=T0 | 07716 | CEAD280R0F |
| A4A1R125 | 322-3171-00 | | | RES,FXD,FILM:590 OHM,1%,0.2W,TC=T0 | 80009 | 322-3171-00 |
| A4A1R126 | 322-3133-00 | | | RES,FXD,FILM:237 OHM,1%,0.2W,TC=T0 | 91637 | CCF50-2F237R0F |
| A4A1R131 | 308-0075-00 | | | RES,FXD,WW:100 OHM,5%,3W | 07088 | |
| A4A1R133 | 301-0100-00 | | | RES,FXD,FILM:10 OHM,5%,0.50W | 01121 | EB1005 |
| A4A1R135 | 308-0075-00 | | | RES,FXD,WW:100 OHM,5%,3W | 07088 | |
| A4A1R137 | 301-0100-00 | | | RES,FXD,FILM:10 OHM,5%,0.50W | 01121 | EB1005 |
| A4A1R313 | 308-0231-00 | | | RES,FXD,WW:220 OHM,5%,3W | 07088 | |
| A4A1R322 | 308-0231-00 | | | RES,FXD,WW:220 OHM,5%,3W | 07088 | |
| A4A1R323 | 321-0085-07 | | | RES,FXD,FILM:75 OHM,0.1%,0.125W,TC=T9 | 80009 | 321-0085-07 |
| A4A1R324 | 315-0750-00 | | | RES,FXD,FILM:75 OHM,5%,0.25W | 80009 | 315-0750-00 |
| A4A1R325 | 315-0122-00 | | | RES,FXD,FILM:1.2K OHM,5%,0.25W | 80009 | 315-0122-00 |
| A4A1R326 | 315-0122-00 | | | RES,FXD,FILM:1.2K OHM,5%,0.25W | 80009 | 315-0122-00 |
| A4A1R326 | 315-0680-00 | | | RES,FXD,FILM:68 OHM,5%,0.25W | 80009 | 315-0680-00 |
| A4A1R327 | 315-0680-00 | | | RES,FXD,FILM:68 OHM,5%,0.25W | 80009 | 315-0680-00 |
| A4A1R328 | 315-0680-00 | | | RES,FXD,FILM:68 OHM,5%,0.25W | 80009 | 315-0680-00 |
| A4A1R333 | 315-0680-00 | | | RES,FXD,FILM:68 OHM,5%,0.25W | 80009 | 315-0680-00 |
| A4A1R336 | 321-0114-07 | | | RES,FXD,FILM:150 OHM,0.1%,0.125W,TC=T9 | 80009 | 321-0114-07 |
| A4A1R337 | 321-0118-04 | | | RES,FXD,FILM:165 OHM,0.1%,0.125W,TC=T2 | 07716 | CEAC165R0B |
| A4A1R338 | 322-3126-00 | | | RES,FXD,FILM:200 OHM,1%,0.2W,TC=T0 | 80009 | 322-3126-00 |
| A4A1R339 | 321-0816-07 | | | RES,FXD,FILM:5K OHM,0.1%,0.125W,TC=T9 | 80009 | 321-0816-07 |
| A4A1R352 | 322-3264-00 | | | RES,FXD,FILM:5.49K OHM,1%,0.2W,TC=T0 | 57668 | CRB20 FXE 5K49 |
| A4A1R353 | 321-0814-07 | | | RES,FXD,FILM:335.6 OHM,0.1%,0.125W,TC=T9 | 07716 | T9-55 335R6B |
| A4A1R354 | 315-0332-00 | | | RES,FXD,FILM:3.3K OHM,5%,0.25W | 80009 | 315-0332-00 |

| Component No. | Tektronix Part No. | Serial/Assembly No. Effective | Dscont | Name & Description | Mfr. Code | Mfr. Part No. |
|---|---|---|---|---|---|---|
| A4A1R355 | 315-0432-00 | | | RES,FXD,FILM:4.3K OHM,5%,0.25W | 80009 | 315-0432-00 |
| A4A1R356 | 315-0152-00 | | | RES,FXD,FILM:1.5K OHM,5%,0.25W | 80009 | 315-0152-00 |
| A4A1R365 | 322-3147-00 | | | RES,FXD:METAL FILM;332 OHM,1%,0.2W,TC=100 PPM;AXIAL,T&R,SMALL BODY | 80009 | 322-3147-00 |
| A4A1R366 | 315-0103-00 | | | RES,FXD,FILM:10K OHM,5%,0.25W | 80009 | 315-0103-00 |
| A4A1R367 | 315-0242-00 | | | RES,FXD,FILM:2.4K OHM,5%,0.25W | 80009 | 315-0242-00 |
| A4A1R426 | 315-0221-00 | | | RES,FXD,FILM:220 OHM,5%,0.25W | 80009 | 315-0221-00 |
| A4A1R441 | 315-0103-00 | | | RES,FXD,FILM:10K OHM,5%,0.25W | 80009 | 315-0103-00 |
| A4A1R442 | 315-0560-00 | | | RES,FXD,FILM:56 OHM,5%,0.25W | 80009 | 315-0560-00 |
| A4A1R443 | 315-0562-00 | | | RES,FXD,FILM:5.6K OHM,5%,0.25W | 80009 | 315-0562-00 |
| A4A1R444 | 315-0103-00 | | | RES,FXD,FILM:10K OHM,5%,0.25W | 80009 | 315-0103-00 |
| A4A1R445 | 315-0511-00 | | | RES,FXD,FILM:510 OHM,5%,0.25W | 80009 | 315-0511-00 |
| A4A1R446 | 315-0511-00 | | | RES,FXD,FILM:510 OHM,5%,0.25W | 80009 | 315-0511-00 |
| A4A1R447 | 315-0911-00 | | | RES,FXD,FILM:910 OHM,5%,0.25W | 80009 | 315-0911-00 |
| A4A1R448 | 315-0103-00 | | | RES,FXD,FILM:10K OHM,5%,0.25W | 80009 | 315-0103-00 |
| A4A1R449 | 315-0103-00 | | | RES,FXD,FILM:10K OHM,5%,0.25W | 80009 | 315-0103-00 |
| A4A1R454 | 315-0103-00 | | | RES,FXD,FILM:10K OHM,5%,0.25W | 80009 | 315-0103-00 |
| A4A1R455 | 315-0202-00 | | | RES,FXD,FILM:2K OHM,5%,0.25W | 80009 | 315-0202-00 |
| A4A1R492 | 307-0503-00 | | | RES NTWK,FXD,FI:(9) 510 OHM,20%,0.125W | 91637 | CSC10A01511GD03 |
| A4A1R512 | 315-0751-00 | | | RES,FXD,FILM:750 OHM,5%,0.25W | 80009 | 315-0751-00 |
| A4A1R514 | 315-0101-00 | | | RES,FXD,FILM:100 OHM,5%,0.25W | 80009 | 315-0101-00 |
| A4A1R515 | 315-0301-00 | | | RES,FXD,FILM:300 OHM,5%,0.25W | 80009 | 315-0301-00 |
| A4A1R516 | 315-0270-00 | | | RES,FXD,FILM:27 OHM,5%,0.25W | 80009 | 315-0270-00 |
| A4A1R517 | 315-0121-00 | | | RES,FXD,FILM:120 OHM,5%,0.25W | 80009 | 315-0121-00 |
| A4A1R518 | 315-0510-00 | | | RES,FXD,FILM:51 OHM,5%,0.25W | 80009 | 315-0510-00 |
| A4A1R519 | 315-0301-00 | | | RES,FXD,FILM:300 OHM,5%,0.25W | 80009 | 315-0301-00 |
| A4A1R520 | 315-0270-00 | | | RES,FXD,FILM:27 OHM,5%,0.25W | 80009 | 315-0270-00 |
| A4A1R521 | 315-0510-00 | | | RES,FXD,FILM:51 OHM,5%,0.25W | 80009 | 315-0510-00 |
| A4A1R522 | 311-0978-00 | | | RES,VAR,NONWW:TRMR,250 OHM,0.5W | 80009 | 311-0978-00 |
| A4A1R526 | 317-0300-00 | | | RES,FXD,CMPSN:30 OHM,5%,0.125W | 80009 | 317-0300-00 |
| A4A1R527 | 315-0680-00 | | | RES,FXD,FILM:68 OHM,5%,0.25W | 80009 | 315-0680-00 |
| A4A1R538 | 315-0510-00 | | | RES,FXD,FILM:51 OHM,5%,0.25W | 80009 | 315-0510-00 |
| A4A1R545 | 315-0510-00 | | | RES,FXD,FILM:51 OHM,5%,0.25W | 80009 | 315-0510-00 |
| A4A1R546 | 315-0510-00 | | | RES,FXD,FILM:51 OHM,5%,0.25W | 80009 | 315-0510-00 |
| A4A1R547 | 315-0680-00 | | | RES,FXD,FILM:68 OHM,5%,0.25W | 80009 | 315-0680-00 |
| A4A1R548 | 315-0680-00 | | | RES,FXD,FILM:68 OHM,5%,0.25W | 80009 | 315-0680-00 |
| A4A1R554 | 315-0270-00 | | | RES,FXD,FILM:27 OHM,5%,0.25W | 80009 | 315-0270-00 |
| A4A1R555 | 315-0301-00 | | | RES,FXD,FILM:300 OHM,5%,0.25W | 80009 | 315-0301-00 |
| A4A1R556 | 315-0101-00 | | | RES,FXD,FILM:100 OHM,5%,0.25W | 80009 | 315-0101-00 |
| A4A1R576 | 315-0510-00 | | | RES,FXD,FILM:51 OHM,5%,0.25W | 80009 | 315-0510-00 |
| A4A1R577 | 315-0510-00 | | | RES,FXD,FILM:51 OHM,5%,0.25W | 80009 | 315-0510-00 |
| A4A1R578 | 315-0680-00 | | | RES,FXD,FILM:68 OHM,5%,0.25W | 80009 | 315-0680-00 |
| A4A1R579 | 315-0270-00 | | | RES,FXD,FILM:27 OHM,5%,0.25W | 80009 | 315-0270-00 |
| A4A1R585 | 315-0101-00 | | | RES,FXD,FILM:100 OHM,5%,0.25W | 80009 | 315-0101-00 |
| A4A1R586 | 315-0301-00 | | | RES,FXD,FILM:300 OHM,5%,0.25W | 80009 | 315-0301-00 |
| A4A1R587 | 315-0510-00 | | | RES,FXD,FILM:51 OHM,5%,0.25W | 80009 | 315-0510-00 |
| A4A1R613 | 315-0510-00 | | | RES,FXD,FILM:51 OHM,5%,0.25W | 80009 | 315-0510-00 |
| A4A1R614 | 321-0229-00 | | | RES,FXD,FILM:2.37K OHM,1%,0.125W,TC=T0 | 80009 | 321-0229-00 |
| A4A1R615 | 315-0221-00 | | | RES,FXD,FILM:220 OHM,5%,0.25W | 80009 | 315-0221-00 |
| A4A1R625 | 315-0681-00 | | | RES,FXD,FILM:680 OHM,5%,0.25W | 80009 | 315-0681-00 |
| A4A1R626 | 315-0121-00 | | | RES,FXD,FILM:120 OHM,5%,0.25W | 80009 | 315-0121-00 |
| A4A1R628 | 315-0101-00 | | | RES,FXD,FILM:100 OHM,5%,0.25W | 80009 | 315-0101-00 |
| A4A1R629 | 315-0510-00 | | | RES,FXD,FILM:51 OHM,5%,0.25W | 80009 | 315-0510-00 |
| A4A1R632 | 311-0978-00 | | | RES,VAR,NONWW:TRMR,250 OHM,0.5W | 80009 | 311-0978-00 |
| A4A1R635 | 315-0221-00 | | | RES,FXD,FILM:220 OHM,5%,0.25W | 80009 | 315-0221-00 |
| A4A1R637 | 315-0681-00 | | | RES,FXD,FILM:680 OHM,5%,0.25W | 80009 | 315-0681-00 |
| A4A1R638 | 315-0121-00 | | | RES,FXD,FILM:120 OHM,5%,0.25W | 80009 | 315-0121-00 |
| A4A1R645 | 315-0101-00 | | | RES,FXD,FILM:100 OHM,5%,0.25W | 80009 | 315-0101-00 |
| A4A1R646 | 315-0301-00 | | | RES,FXD,FILM:300 OHM,5%,0.25W | 80009 | 315-0301-00 |

| Component No. | Tektronix Part No. | Serial/Assembly No. Effective | Dscont | Name & Description | Mfr. Code | Mfr. Part No. |
|---|---|---|---|---|---|---|
| A4A1R647 | 315-0270-00 | | | RES,FXD,FILM:27 OHM,5%,0.25W | 80009 | 315-0270-00 |
| A4A1R648 | 315-0681-00 | | | RES,FXD,FILM:680 OHM,5%,0.25W | 80009 | 315-0681-00 |
| A4A1R656 | 315-0121-00 | | | RES,FXD,FILM:120 OHM,5%,0.25W | 80009 | 315-0121-00 |
| A4A1R658 | 315-0510-00 | | | RES,FXD,FILM:51 OHM,5%,0.25W | 80009 | 315-0510-00 |
| A4A1R661 | 311-0978-00 | | | RES,VAR,NONWW:TRMR,250 OHM,0.5W | 80009 | 311-0978-00 |
| A4A1R662 | 315-0221-00 | | | RES,FXD,FILM:220 OHM,5%,0.25W | 80009 | 315-0221-00 |
| A4A1R663 | 315-0510-00 | | | RES,FXD,FILM:51 OHM,5%,0.25W | 80009 | 315-0510-00 |
| A4A1R666 | 315-0121-00 | | | RES,FXD,FILM:120 OHM,5%,0.25W | 80009 | 315-0121-00 |
| A4A1R667 | 315-0681-00 | | | RES,FXD,FILM:680 OHM,5%,0.25W | 80009 | 315-0681-00 |
| A4A1R675 | 315-0101-00 | | | RES,FXD,FILM:100 OHM,5%,0.25W | 80009 | 315-0101-00 |
| A4A1R676 | 315-0301-00 | | | RES,FXD,FILM:300 OHM,5%,0.25W | 80009 | 315-0301-00 |
| A4A1R677 | 315-0270-00 | | | RES,FXD,FILM:27 OHM,5%,0.25W | 80009 | 315-0270-00 |
| A4A1R678 | 315-0681-00 | | | RES,FXD,FILM:680 OHM,5%,0.25W | 80009 | 315-0681-00 |
| A4A1R679 | 315-0121-00 | | | RES,FXD,FILM:120 OHM,5%,0.25W | 80009 | 315-0121-00 |
| A4A1R687 | 315-0221-00 | | | RES,FXD,FILM:220 OHM,5%,0.25W | 80009 | 315-0221-00 |
| A4A1R713 | 311-0978-00 | | | RES,VAR,NONWW:TRMR,250 OHM,0.5W | 80009 | 311-0978-00 |
| A4A1R715 | 315-0301-00 | | | RES,FXD,FILM:300 OHM,5%,0.25W | 80009 | 315-0301-00 |
| A4A1R716 | 315-0270-00 | | | RES,FXD,FILM:27 OHM,5%,0.25W | 80009 | 315-0270-00 |
| A4A1R721 | 315-0911-00 | | | RES,FXD,FILM:910 OHM,5%,0.25W | 80009 | 315-0911-00 |
| A4A1R722 | 315-0152-00 | | | RES,FXD,FILM:1.5K OHM,5%,0.25W | 80009 | 315-0152-00 |
| A4A1R723 | 315-0362-00 | | | RES,FXD,FILM:3.6K OHM,5%,0.25W | 80009 | 315-0362-00 |
| A4A1R724 | 321-0155-00 | | | RES,FXD,FILM:402 OHM,1%,0.125W,TC=T0 | 07716 | CEAD402R0F |
| A4A1R737 | 315-0331-00 | | | RES,FXD,FILM:330 OHM,5%,0.25W | 80009 | 315-0331-00 |
| A4A1R738 | 315-0102-00 | | | RES,FXD,FILM:1K OHM,5%,0.25W | 80009 | 315-0102-00 |
| A4A1R745 | 315-0362-00 | | | RES,FXD,FILM:3.6K OHM,5%,0.25W | 80009 | 315-0362-00 |
| A4A1R746 | 315-0152-00 | | | RES,FXD,FILM:1.5K OHM,5%,0.25W | 80009 | 315-0152-00 |
| A4A1R747 | 315-0121-00 | | | RES,FXD,FILM:120 OHM,5%,0.25W | 80009 | 315-0121-00 |
| A4A1R754 | 311-0978-00 | | | RES,VAR,NONWW:TRMR,250 OHM,0.5W | 80009 | 311-0978-00 |
| A4A1R755 | 315-0221-00 | | | RES,FXD,FILM:220 OHM,5%,0.25W | 80009 | 315-0221-00 |
| A4A1R756 | 315-0301-00 | | | RES,FXD,FILM:300 OHM,5%,0.25W | 80009 | 315-0301-00 |
| A4A1R757 | 315-0101-00 | | | RES,FXD,FILM:100 OHM,5%,0.25W | 80009 | 315-0101-00 |
| A4A1R767 | 315-0331-00 | | | RES,FXD,FILM:330 OHM,5%,0.25W | 80009 | 315-0331-00 |
| A4A1R768 | 315-0102-00 | | | RES,FXD,FILM:1K OHM,5%,0.25W | 80009 | 315-0102-00 |
| A4A1R774 | 315-0362-00 | | | RES,FXD,FILM:3.6K OHM,5%,0.25W | 80009 | 315-0362-00 |
| A4A1R775 | 315-0152-00 | | | RES,FXD,FILM:1.5K OHM,5%,0.25W | 80009 | 315-0152-00 |
| A4A1R776 | 315-0121-00 | | | RES,FXD,FILM:120 OHM,5%,0.25W | 80009 | 315-0121-00 |
| A4A1R778 | 321-0085-07 | | | RES,FXD,FILM:75 OHM,0.1%,0.125W,TC=T9 | 80009 | 321-0085-07 |
| A4A1R779 | 315-0510-00 | | | RES,FXD,FILM:51 OHM,5%,0.25W | 80009 | 315-0510-00 |
| A4A1R784 | 311-0978-00 | | | RES,VAR,NONWW:TRMR,250 OHM,0.5W | 80009 | 311-0978-00 |
| A4A1R785 | 315-0301-00 | | | RES,FXD,FILM:300 OHM,5%,0.25W | 80009 | 315-0301-00 |
| A4A1R786 | 315-0101-00 | | | RES,FXD,FILM:100 OHM,5%,0.25W | 80009 | 315-0101-00 |
| A4A1R811 | 315-0101-00 | | | RES,FXD,FILM:100 OHM,5%,0.25W | 80009 | 315-0101-00 |
| A4A1R812 | 317-0300-00 | | | RES,FXD,CMPSN:30 OHM,5%,0.125W | 80009 | 317-0300-00 |
| A4A1R813 | 322-3184-00 | | | RES,FXD,FILM:806 OHM,1%,0.2W,TC=T0 | 57668 | CRB20 FXE 806E |
| A4A1R814 | 322-3106-00 | | | RES,FXD,FILM:124 OHM,1%,0.2W,TC=100PPM,SMALL BODY,T&R | 80009 | 322-3106-00 |
| A4A1R815 | 322-3097-00 | | | RES,FXD:METAL FILM;100 OHM,1%,0.2W,TC=100 PPM;AXIAL,T&R,SMALL BODY | 57668 | CRB20 FXE 100E |
| A4A1R825 | 315-0510-00 | | | RES,FXD,FILM:51 OHM,5%,0.25W | 80009 | 315-0510-00 |
| A4A1R826 | 315-0101-00 | | | RES,FXD,FILM:100 OHM,5%,0.25W | 80009 | 315-0101-00 |
| A4A1R831 | 311-0978-00 | | | RES,VAR,NONWW:TRMR,250 OHM,0.5W | 80009 | 311-0978-00 |
| A4A1R834 | 315-0510-00 | | | RES,FXD,FILM:51 OHM,5%,0.25W | 80009 | 315-0510-00 |
| A4A1R835 | 317-0300-00 | | | RES,FXD,CMPSN:30 OHM,5%,0.125W | 80009 | 317-0300-00 |
| A4A1R843 | 315-0152-00 | | | RES,FXD,FILM:1.5K OHM,5%,0.25W | 80009 | 315-0152-00 |
| A4A1R845 | 315-0101-00 | | | RES,FXD,FILM:100 OHM,5%,0.25W | 80009 | 315-0101-00 |
| A4A1R846 | 315-0362-00 | | | RES,FXD,FILM:3.6K OHM,5%,0.25W | 80009 | 315-0362-00 |
| A4A1R848 | 315-0102-00 | | | RES,FXD,FILM:1K OHM,5%,0.25W | 80009 | 315-0102-00 |
| A4A1R849 | 315-0121-00 | | | RES,FXD,FILM:120 OHM,5%,0.25W | 80009 | 315-0121-00 |
| A4A1R852 | 315-0270-00 | | | RES,FXD,FILM:27 OHM,5%,0.25W | 80009 | 315-0270-00 |

| Component No. | Tektronix Part No. | Serial/Assembly No. Effective | Dscont | Name & Description | Mfr. Code | Mfr. Part No. |
|---|---|---|---|---|---|---|
| A4A1R856 | 317-0300-00 | | | RES,FXD,CMPSN:30 OHM,5%,0.125W | 80009 | 317-0300-00 |
| A4A1R860 | 315-0510-00 | | | RES,FXD,FILM:51 OHM,5%,0.25W | 80009 | 315-0510-00 |
| A4A1R861 | 311-0978-00 | | | RES,VAR,NONWW:TRMR,250 OHM,0.5W | 80009 | 311-0978-00 |
| A4A1R863 | 315-0510-00 | | | RES,FXD,FILM:51 OHM,5%,0.25W | 80009 | 315-0510-00 |
| A4A1R864 | 317-0300-00 | | | RES,FXD,CMPSN:30 OHM,5%,0.125W | 80009 | 317-0300-00 |
| A4A1R866 | 315-0270-00 | | | RES,FXD,FILM:27 OHM,5%,0.25W | 80009 | 315-0270-00 |
| A4A1R867 | 315-0301-00 | | | RES,FXD,FILM:300 OHM,5%,0.25W | 80009 | 315-0301-00 |
| A4A1R874 | 315-0101-00 | | | RES,FXD,FILM:100 OHM,5%,0.25W | 80009 | 315-0101-00 |
| A4A1R875 | 315-0152-00 | | | RES,FXD,FILM:1.5K OHM,5%,0.25W | 80009 | 315-0152-00 |
| A4A1R876 | 315-0362-00 | | | RES,FXD,FILM:3.6K OHM,5%,0.25W | 80009 | 315-0362-00 |
| A4A1R878 | 315-0102-00 | | | RES,FXD,FILM:1K OHM,5%,0.25W | 80009 | 315-0102-00 |
| A4A1R879 | 315-0121-00 | | | RES,FXD,FILM:120 OHM,5%,0.25W | 80009 | 315-0121-00 |
| A4A1R882 | 315-0270-00 | | | RES,FXD,FILM:27 OHM,5%,0.25W | 80009 | 315-0270-00 |
| A4A1R885 | 317-0300-00 | | | RES,FXD,CMPSN:30 OHM,5%,0.125W | 80009 | 317-0300-00 |
| A4A1R888 | 307-0503-00 | | | RES NTWK,FXD,FI:(9) 510 OHM,20%,0.125W | 91637 | CSC10A01511GD03 |
| A4A1R911 | 315-0510-00 | | | RES,FXD,FILM:51 OHM,5%,0.25W | 80009 | 315-0510-00 |
| A4A1R913 | 315-0331-00 | | | RES,FXD,FILM:330 OHM,5%,0.25W | 80009 | 315-0331-00 |
| A4A1R916 | 311-0978-00 | | | RES,VAR,NONWW:TRMR,250 OHM,0.5W | 80009 | 311-0978-00 |
| A4A1R921 | 315-0102-00 | | | RES,FXD,FILM:1K OHM,5%,0.25W | 80009 | 315-0102-00 |
| A4A1R922 | 315-0121-00 | | | RES,FXD,FILM:120 OHM,5%,0.25W | 80009 | 315-0121-00 |
| A4A1R923 | 315-0270-00 | | | RES,FXD,FILM:27 OHM,5%,0.25W | 80009 | 315-0270-00 |
| A4A1R924 | 315-0301-00 | | | RES,FXD,FILM:300 OHM,5%,0.25W | 80009 | 315-0301-00 |
| A4A1R926 | 315-0152-00 | | | RES,FXD,FILM:1.5K OHM,5%,0.25W | 80009 | 315-0152-00 |
| A4A1R927 | 315-0362-00 | | | RES,FXD,FILM:3.6K OHM,5%,0.25W | 80009 | 315-0362-00 |
| A4A1R932 | 315-0270-00 | | | RES,FXD,FILM:27 OHM,5%,0.25W | 80009 | 315-0270-00 |
| A4A1R933 | 315-0301-00 | | | RES,FXD,FILM:300 OHM,5%,0.25W | 80009 | 315-0301-00 |
| A4A1R944 | 315-0331-00 | | | RES,FXD,FILM:330 OHM,5%,0.25W | 80009 | 315-0331-00 |
| A4A1R956 | 311-0978-00 | | | RES,VAR,NONWW:TRMR,250 OHM,0.5W | 80009 | 311-0978-00 |
| A4A1R974 | 315-0331-00 | | | RES,FXD,FILM:330 OHM,5%,0.25W | 80009 | 315-0331-00 |
| A4A1R975 | 311-0978-00 | | | RES,VAR,NONWW:TRMR,250 OHM,0.5W | 80009 | 311-0978-00 |
| A4A1RT513 | 307-0126-00 | | | RES,THERMAL:100 OHM,10%,NTC | 14193 | 2D21-101-D |
| A4A1RT616 | 307-0126-00 | | | RES,THERMAL:100 OHM,10%,NTC | 14193 | 2D21-101-D |
| A4A1RT636 | 307-0126-00 | | | RES,THERMAL:100 OHM,10%,NTC | 14193 | 2D21-101-D |
| A4A1RT657 | 307-0126-00 | | | RES,THERMAL:100 OHM,10%,NTC | 14193 | 2D21-101-D |
| A4A1RT665 | 307-0126-00 | | | RES,THERMAL:100 OHM,10%,NTC | 14193 | 2D21-101-D |
| A4A1RT686 | 307-0126-00 | | | RES,THERMAL:100 OHM,10%,NTC | 14193 | 2D21-101-D |
| A4A1RT725 | 307-0126-00 | | | RES,THERMAL:100 OHM,10%,NTC | 14193 | 2D21-101-D |
| A4A1RT832 | 307-0126-00 | | | RES,THERMAL:100 OHM,10%,NTC | 14193 | 2D21-101-D |
| A4A1RT862 | 307-0126-00 | | | RES,THERMAL:100 OHM,10%,NTC | 14193 | 2D21-101-D |
| A4A1RT915 | 307-0126-00 | | | RES,THERMAL:100 OHM,10%,NTC | 14193 | 2D21-101-D |
| A4A1RT945 | 307-0126-00 | | | RES,THERMAL:100 OHM,10%,NTC | 14193 | 2D21-101-D |
| A4A1RT973 | 307-0126-00 | | | RES,THERMAL:100 OHM,10%,NTC | 14193 | 2D21-101-D |
| A4A1TP386 | 214-4085-00 | | | TERM,TEST POINT:0.070 ID,0.220 H,0.063 DIA PCB,0.015 X 0.032 BRASS,W/ RED NYLON COLLAR | 26364 | 104-01-02 |
| A4A1TP412 | 214-4085-00 | | | TERM,TEST POINT:0.070 ID,0.220 H,0.063 DIA PCB,0.015 X 0.032 BRASS,W/ RED NYLON COLLAR | 26364 | 104-01-02 |
| A4A1TP416 | 214-4085-00 | | | TERM,TEST POINT:0.070 ID,0.220 H,0.063 DIA PCB,0.015 X 0.032 BRASS,W/ RED NYLON COLLAR | 26364 | 104-01-02 |
| A4A1TP424 | 214-4085-00 | | | TERM,TEST POINT:0.070 ID,0.220 H,0.063 DIA PCB,0.015 X 0.032 BRASS,W/ RED NYLON COLLAR | 26364 | 104-01-02 |
| A4A1TP454 | 214-4085-00 | | | TERM,TEST POINT:0.070 ID,0.220 H,0.063 DIA PCB,0.015 X 0.032 BRASS,W/ RED NYLON COLLAR | 26364 | 104-01-02 |
| A4A1TP468 | 214-4085-00 | | | TERM,TEST POINT:0.070 ID,0.220 H,0.063 DIA PCB,0.015 X 0.032 BRASS,W/ RED NYLON COLLAR | 26364 | 104-01-02 |
| A4A1TP472 | 214-4085-00 | | | TERM,TEST POINT:0.070 ID,0.220 H,0.063 DIA PCB,0.015 X 0.032 BRASS,W/ RED NYLON COLLAR | 26364 | 104-01-02 |
| A4A1TP474 | 214-4085-00 | | | TERM,TEST POINT:0.070 ID,0.220 H,0.063 DIA PCB,0.015 X 0.032 BRASS,W/ RED NYLON COLLAR | 26364 | 104-01-02 |

| Component No. | Tektronix Part No. | Serial/Assembly No. Effective | Dscont | Name & Description | Mfr. Code | Mfr. Part No. |
|---|---|---|---|---|---|---|
| A4A1TP479 | 214-4085-00 | | | TERM,TEST POINT:0.070 ID,0.220 H,0.063 DIA PCB,0.015 X 0.032 BRASS,W/ RED NYLON COLLAR | 26364 | 104-01-02 |
| A4A1TP732 | 131-0608-00 | | | TERMINAL,PIN:0.365 L X 0.025 BRZ GLD PL | 80009 | 131-0608-00 |
| A4A1TP762 | 131-0608-00 | | | TERMINAL,PIN:0.365 L X 0.025 BRZ GLD PL | 80009 | 131-0608-00 |
| A4A1TP919 | 214-4085-00 | | | TERM,TEST POINT:0.070 ID,0.220 H,0.063 DIA PCB,0.015 X 0.032 BRASS,W/ RED NYLON COLLAR | 26364 | 104-01-02 |
| A4A1TP922 | 214-4085-00 | | | TERM,TEST POINT:0.070 ID,0.220 H,0.063 DIA PCB,0.015 X 0.032 BRASS,W/ RED NYLON COLLAR | 26364 | 104-01-02 |
| A4A1TP957 | 214-4085-00 | | | TERM,TEST POINT:0.070 ID,0.220 H,0.063 DIA PCB,0.015 X 0.032 BRASS,W/ RED NYLON COLLAR | 26364 | 104-01-02 |
| A4A1TP963 | 214-4085-00 | | | TERM,TEST POINT:0.070 ID,0.220 H,0.063 DIA PCB,0.015 X 0.032 BRASS,W/ RED NYLON COLLAR | 26364 | 104-01-02 |
| A4A1TP972 | 214-4085-00 | | | TERM,TEST POINT:0.070 ID,0.220 H,0.063 DIA PCB,0.015 X 0.032 BRASS,W/ RED NYLON COLLAR | 26364 | 104-01-02 |
| A4A1U122 | 156-1529-00 | | | IC,LINEAR:BIPOLAR,VOLTAGE REGULATOR;POSITIV E,ADJUSTABLE,100MA,5%;LM317LZ,TO-92 | 80009 | 156-1529-00 |
| A4A1U127 | 156-2223-00 | | | IC,LINEAR:BIPOLAR,VOLTAGE REGULATOR;NEGATIV E,ADJUSTABLE,100MA,4%;LM337LZ,TO-92 | 80009 | 156-2223-00 |
| A4A1U216 | 156-0872-00 | | | IC,LINEAR:BIPOLAR,VOLTAGE REGULATOR;NEGATIV E,-12V,1.0A,4%;MC7912CT,TO-220 | 04713 | MC7912CT |
| | | | | *MOUNTING PARTS* | | |
| | 210-0586-00 | | | NUT,PL,ASSEM WA:4-40 X 0.25,STL CD PL | 78189 | 211-041800-00 |
| | 211-0033-00 | | | SCR,ASSEM WSHR:4-40 X 0.312,PNH,STL,CD PL | TK0435 | ORDER BY DESCR |
| | | | | *END MOUNTING PARTS* | | |
| A4A1U232 | 156-0285-00 | | | IC,LINEAR:BIPOLAR,VOLTAGE REGULATOR;POSITIV E,12V,1.0A,4%;MC7812CT,TO-220 | 80009 | 156-0285-00 |
| | | | | *MOUNTING PARTS* | | |
| | 210-0586-00 | | | NUT,PL,ASSEM WA:4-40 X 0.25,STL CD PL | 78189 | 211-041800-00 |
| | 211-0033-00 | | | SCR,ASSEM WSHR:4-40 X 0.312,PNH,STL,CD PL | TK0435 | ORDER BY DESCR |
| | | | | *END MOUNTING PARTS* | | |
| A4A1U333 | 165-2243-00 | | | MICROCKT,LINEAR:OP-AMP | 80009 | 165-2243-00 |
| A4A1U495 | 156-2292-00 | | | IC,DIGITAL:ALSTTL,TRANSCEIVER;OCTAL NONINV, 3-STATE;74ALS652,DIP24.3,TUBE | 80009 | 156-2292-00 |
| A4A1U612 | 156-0534-00 | | | IC,LINEAR: | 02735 | CA3102E-98 |
| | | | | *MOUNTING PARTS* | | |
| | 136-0728-00 | | | SKT,PL-IN ELEK:MICROCKT,14 CONTACT | 09922 | DILB14P-108 |
| | | | | *END MOUNTING PARTS* | | |
| A4A1U644 | 156-0534-00 | | | IC,LINEAR: | 02735 | CA3102E-98 |
| | | | | *MOUNTING PARTS* | | |
| | 136-0728-00 | | | SKT,PL-IN ELEK:MICROCKT,14 CONTACT | 09922 | DILB14P-108 |
| | | | | *END MOUNTING PARTS* | | |
| A4A1U674 | 156-0534-00 | | | IC,LINEAR: | 02735 | CA3102E-98 |
| | | | | *MOUNTING PARTS* | | |
| | 136-0728-00 | | | SKT,PL-IN ELEK:MICROCKT,14 CONTACT | 09922 | DILB14P-108 |
| | | | | *END MOUNTING PARTS* | | |
| A4A1U692 | 156-0874-00 | | | IC,DIGITAL:LSTTL,LATCH;8-BIT ADDRESSABLE;74 LS259,DIP16.3,TUBE | 01295 | SN74LS259N |
| A4A1U814 | 156-0534-00 | | | IC,LINEAR: | 02735 | CA3102E-98 |
| | | | | *MOUNTING PARTS* | | |
| | 136-0728-00 | | | SKT,PL-IN ELEK:MICROCKT,14 CONTACT | 09922 | DILB14P-108 |
| | | | | *END MOUNTING PARTS* | | |
| A4A1U844 | 156-0534-00 | | | IC,LINEAR: | 02735 | CA3102E-98 |
| | | | | *MOUNTING PARTS* | | |
| | 136-0728-00 | | | SKT,PL-IN ELEK:MICROCKT,14 CONTACT | 09922 | DILB14P-108 |
| | | | | *END MOUNTING PARTS* | | |
| A4A1U874 | 156-0534-00 | | | IC,LINEAR: | 02735 | CA3102E-98 |
| | | | | *MOUNTING PARTS* | | |
| | 136-0728-00 | | | SKT,PL-IN ELEK:MICROCKT,14 CONTACT | 09922 | DILB14P-108 |
| | | | | *END MOUNTING PARTS* | | |
| A4A1U898 | 160-5572-00 | | | IC,DIGITAL:STTL,PLD;PAL,20L10,50NS,165MA,PR GM 156-3550-00;20L10A,DIP24.3 | 80009 | 160-5572-00 |
| | | | | *MOUNTING PARTS* | | |

| Component No. | Tektronix Part No. | Serial/Assembly No. Effective | Dscont | Name & Description | Mfr. Code | Mfr. Part No. |
|---|---|---|---|---|---|---|
| | 136-0925-00 | | | SOCKET,DIP:: *END MOUNTING PARTS* | 91506 | 224-AG30D |
| A4A1VR315 | 152-0757-00 | | | DIODE,ZENER:,;6.2V,5%,1W;1N4735A,DO-41,TR | 80009 | 152-0757-00 |
| A4A1VR316 | 152-0757-00 | | | DIODE,ZENER:,;6.2V,5%,1W;1N4735A,DO-41,TR | 80009 | 152-0757-00 |
| A4A1W918 | 131-0566-00 | | | BUS,CONDUCTOR:DUMMY RES,0.094 OD X 0.225 L | 80009 | 131-0566-00 |

| Component No. | Tektronix Part No. | Serial/Assembly No. Effective | Dscont | Name & Description | Mfr. Code | Mfr. Part No. |
|---|---|---|---|---|---|---|
| A4A1A1 | 671-0714-01 | 671-0695-01 | 671-0695-01 | CIRCUIT BD ASSY:HIGHPASS FILTER | 80009 | 671-0714-01 |
| A4A1A1 | 671-0718-00 | 671-0695-02 | | CIRCUIT BD ASSY:CHROMA BANDPASS FILTER | 80009 | 671-0718-00 |
| A4A1A1C1 | 283-0622-00 | 671-0718-00 | | CAP,FXD,MICA DI:450PF,1%,300V | 80009 | 283-0622-00 |
| A4A1A1C2 | 283-0644-00 | 671-0718-00 | | CAP,FXD,MICA DI:150PF,1%,500V | 80009 | 283-0644-00 |
| A4A1A1C3 | 283-0784-00 | 671-0718-00 | | CAP,FXD,MICA DI:40PF,2%,500V | 80009 | 283-0784-00 |
| A4A1A1C4 | 283-0665-00 | 671-0718-00 | | CAP,FXD,MICA DI:190PF,1%,100V | 80009 | 283-0665-00 |
| A4A1A1C6 | 283-0149-00 | 671-0718-00 | | CAP,FXD,CER DI:25PF,2%,200V | 80009 | 283-0149-00 |
| A4A1A1C7 | 281-0139-00 | 671-0718-00 | | CAP,VAR,CER DI:2.5-9PF,100V | 80009 | 281-0139-00 |
| A4A1A1C216 | 283-0788-00 | 671-0714-01 | 671-0714-01 | CAP,FXD,MICA DI:267PF,1%,500V | 80009 | 283-0788-00 |
| A4A1A1C218 | 283-0776-00 | | | CAP,FXD,MICA DI:2130 PF,1%,500V | 80009 | 283-0776-00 |
| A4A1A1C413 | 283-0769-00 | 671-0714-01 | 671-0714-01 | CAP,FXD,MICA DI:278 PF,1%,500V | 80009 | 283-0769-00 |
| A4A1A1C415 | 283-0594-00 | 671-0714-01 | 671-0714-01 | CAP,FXD,MICA DI:0.001UF,1%,100V | 80009 | 283-0594-00 |
| A4A1A1CR1 | 152-0141-02 | 671-0718-00 | | DIODE,SIG:,ULTRA FAST;40V,150MA,4NS,2PF;1N4152,DO-35,T&R | 80009 | 152-0141-02 |
| A4A1A1CR2 | 152-0141-02 | 671-0718-00 | | DIODE,SIG:,ULTRA FAST;40V,150MA,4NS,2PF;1N4152,DO-35,T&R | 80009 | 152-0141-02 |
| A4A1A1CR319 | 152-0141-02 | 671-0714-01 | 671-0714-01 | DIODE,SIG:,ULTRA FAST;40V,150MA,4NS,2PF;1N4152,DO-35,T&R | 80009 | 152-0141-02 |
| A4A1A1J112 | 131-2002-00 | | | CONN,BOX:: | TK1483 | TKD-05254-103 |
| A4A1A1J216 | 131-0608-00 | 671-0714-01 | 671-0714-01 | TERMINAL,PIN:0.365 L X 0.025 BRZ GLD PL (QUANTITY 3) | 80009 | 131-0608-00 |
| A4A1A1J312 | 131-2002-00 | | | CONN,BOX:: | TK1483 | TKD-05254-103 |
| A4A1A1J412 | 131-2002-00 | | | CONN,BOX:: | TK1483 | TKD-05254-103 |
| A4A1A1J413 | 131-0608-00 | 671-0718-00 | | TERMINAL,PIN:0.365 L X 0.025 BRZ GLD PL (QUANTITY 3) | 80009 | 131-0608-00 |
| A4A1A1L5 | 114-0366-00 | 671-0718-00 | | COIL,RF:VARIABLE,2.40-2.70UH,Q MIN 190 @ 2.6 UH, POT CORE | 54937 | 114-0366-00 |
| A4A1A1L6 | 108-0509-00 | 671-0718-00 | | COIL,RF:FIXED,2.45UH +/-10%,AXIAL LEAD,CORE 276-0153-00,PKG | TK2042 | ORDER BY DESCR |
| A4A1A1L214 | 114-0432-00 | 671-0714-01 | 671-0714-01 | COIL,RF:VAR,9.5-10.5UH | 54937 | 500-4460 |
| A4A1A1L314 | 114-0431-00 | | | COIL,RF:VAR,13.7-15.2UH | 54937 | 500-4459 |
| A4A1A1P216 | 131-0993-00 | | | CONN,BOX:SHUNT/SHORTING,;FEMALE,STR,1 X 2,0.1 CTR,0.385 H,30 GOLD,BLACK,JUMPER; | 22526 | 65474-006 |
| A4A1A1R1 | 322-3126-07 | 671-0718-00 | | RES,FXD,FILM:200 OHM,0.1%,0.2W,TC=T9 | 91637 | CCF50-2-C200R0BT |
| A4A1A1R2 | 322-3188-00 | 671-0718-00 | | RES,FXD,FILM:887 OHM,1%,0.2W,TC=T0 | 80009 | 322-3188-00 |
| A4A1A1R3 | 311-2276-00 | 671-0718-00 | | RES,VAR,NONWW:TRMR,100 OHM,20%,0.5W | 80009 | 311-2276-00 |
| A4A1A1R112 | 322-3289-00 | 671-0714-01 | 671-0714-01 | RES,FXD:METAL FILM;10K OHM,1%,0.2W,TC=100 PPM;AXIAL,T&R,SMALL BODY | 80009 | 322-3289-00 |
| A4A1A1R114 | 311-2231-00 | 671-0714-01 | 671-0714-01 | RES,VAR,TRMR:CERMET;1K OHM,20%,0.5W,0.197 SQ,TOP ADJUST;T&R | TK1450 | GF06UT 1K |
| A4A1A1R417 | 321-0122-00 | 671-0714-01 | 671-0714-01 | RES,FXD,FILM:182 OHM,1%,0.125W,TC=T0 | 80009 | 321-0122-00 |

| Component No. | Tektronix Part No. | Serial/Assembly No. Effective | Dscont | Name & Description | Mfr. Code | Mfr. Part No. |
|---|---|---|---|---|---|---|
| A4A1A2 | 671-0748-01 | | | CIRCUIT BD ASSY:DIFF STEP FILTER | 80009 | 671-0748-01 |
| A4A1A2C213 | 281-0775-02 | | | CAP,FXD,CERAMIC:MLC;0.1UF,20%,50V,X7R,0.265 X 0.100;AXIAL,T&R | 04222 | SA205C104MAA |
| A4A1A2C314 | 283-0666-00 | | | CAP,FXD,MICA DI:890PF,2%,100V | 80009 | 283-0666-00 |
| A4A1A2C316 | 283-0594-00 | | | CAP,FXD,MICA DI:0.001UF,1%,100V | 80009 | 283-0594-00 |
| A4A1A2C318 | 283-0773-00 | | | CAP,FXD,MICA DI:578 PF,1%,300V | 80009 | 283-0773-00 |
| A4A1A2C414 | 281-0898-00 | | | CAP,FXD,CER DI:7.5PF,+/-0.5PF,500V | 04222 | MA107A7R5DAA |
| A4A1A2CR316 | 152-0141-02 | | | DIODE,SIG:,ULTRA FAST;40V,150MA,4NS,2PF;1N4152,DO-35,T&R | 80009 | 152-0141-02 |
| A4A1A2J112 | 131-2002-00 | | | CONN,BOX:: | TK1483 | TKO-05254-103 |
| A4A1A2J312 | 131-2002-00 | | | CONN,BOX:: | TK1483 | TKO-05254-103 |
| A4A1A2J412 | 131-2002-00 | | | CONN,BOX:: | TK1483 | TKO-05254-103 |
| A4A1A2L218 | 108-0360-00 | | | COIL,RF:FIXED,46UH | 80009 | 108-0360-00 |
| A4A1A2L313 | 108-0341-00 | | | COIL,RF:FIXED,1.4UH | 80009 | 108-0341-00 |
| A4A1A2L411 | 108-1112-00 | | | COIL,RF:FIXED 170UH | 80009 | 108-1112-00 |
| A4A1A2R114 | 315-0270-00 | | | RES,FXD,FILM:27 OHM,5%,0.25W | 80009 | 315-0270-00 |
| A4A1A2R119 | 322-3342-00 | | | RES,FXD,FILM:35.7K OHM,1%,0.2W,TC=T0 | 57668 | CRB20 FXE 35K7 |
| A4A1A2R211 | 321-0368-00 | | | RES,FXD,FILM:66.5K OHM,1%,0.125W,TC=T0 | 07716 | CEAD66501F |
| A4A1A2R212 | 322-3130-00 | | | RES,FXD:METAL FILM;221 OHM,1%,0.2W,TC=100 PPM;AXIAL,T&R,SMALL BODY | 80009 | 322-3130-00 |
| A4A1A2R215 | 311-2229-00 | | | RES,VAR,NONWW:TRMR,250 OHM,20%,0.5W LINEAR | TK1450 | GF06UT 250 |
| A4A1A2R311 | 315-0102-00 | | | RES,FXD,FILM:1K OHM,5%,0.25W | 80009 | 315-0102-00 |
| A4A1A2R415 | 321-0090-00 | | | RES,FXD,FILM:84.5 OHM,1%,0.125W,TC=T0 | 80009 | 321-0090-00 |

| Component No. | Tektronix Part No. | Serial/Assembly No. Effective | Dscont | Name & Description | Mfr. Code | Mfr. Part No. |
|---|---|---|---|---|---|---|
| A4A1A3 | 671-0716-02 | | | CIRCUIT BD ASSY:LF NOISE FILTER | 80009 | 671-0716-02 |
| A4A1A3C115 | 283-0690-00 | | | CAP,FXD,MICA DI:560PF,1%,300V | 80009 | 283-0690-00 |
| A4A1A3C116 | 283-0210-00 | | | CAP,FXD,CER DI:0.0056UF,20%,100V | 04222 | SR301C562MAA |
| A4A1A3C211 | 281-0775-02 | | | CAP,FXD,CERAMIC:MLC;0.1UF,20%,50V,X7R,0.265 X 0.100;AXIAL,T&R | 04222 | SA205C104MAA |
| A4A1A3C212 | 281-0775-02 | | | CAP,FXD,CERAMIC:MLC;0.1UF,20%,50V,X7R,0.265 X 0.100;AXIAL,T&R | 04222 | SA205C104MAA |
| A4A1A3C213 | 283-0594-00 | | | CAP,FXD,MICA DI:0.001UF,1%,100V | 80009 | 283-0594-00 |
| A4A1A3C214 | 283-0690-00 | | | CAP,FXD,MICA DI:560PF,1%,300V | 80009 | 283-0690-00 |
| A4A1A3C215 | 283-0769-00 | | | CAP,FXD,MICA DI:278 PF,1%,500V | 80009 | 283-0769-00 |
| A4A1A3C217 | 285-1190-00 | | | CAP,FXD,MTLZD:0.056 UF,5%,250 V | 55112 | 160/.056/J/250/C |
| A4A1A3C314 | 283-0594-00 | | | CAP,FXD,MICA DI:0.001UF,1%,100V | 80009 | 283-0594-00 |
| A4A1A3C315 | 283-0690-00 | | | CAP,FXD,MICA DI:560PF,1%,300V | 80009 | 283-0690-00 |
| A4A1A3C316 | 283-0769-00 | | | CAP,FXD,MICA DI:278 PF,1%,500V | 80009 | 283-0769-00 |
| A4A1A3C317 | 285-1190-00 | | | CAP,FXD,MTLZD:0.056 UF,5%,250 V | 55112 | 160/.056/J/250/C |
| A4A1A3C318 | 283-0690-00 | | | CAP,FXD,MICA DI:560PF,1%,300V | 80009 | 283-0690-00 |
| A4A1A3C415 | 283-0663-00 | | | CAP,FXD,MICA DI:16.8PF,+/0.5PF,500V | 80009 | 283-0663-00 |
| A4A1A3C416 | 281-0910-00 | | | CAP,FXD,CER DI:1800PF,1%,50V | 04222 | MA205A182FAA |
| A4A1A3C417 | 281-0910-00 | | | CAP,FXD,CER DI:1800PF,1%,50V | 04222 | MA205A182FAA |
| A4A1A3CR317 | 152-0141-02 | | | DIODE,SIG:,ULTRA FAST;40V,150MA,4NS,2PF;1N4152,DO-35,T&R | 80009 | 152-0141-02 |
| A4A1A3J112 | 131-2002-00 | | | CONN,BOX:: | TK1483 | TKO-05254-103 |
| A4A1A3J312 | 131-2002-00 | | | CONN,BOX:: | TK1483 | TKO-05254-103 |
| A4A1A3J412 | 131-2002-00 | | | CONN,BOX:: | TK1483 | TKO-05254-103 |
| A4A1A3L114 | 108-1417-00 | | | COIL,RF:45UH,2%,7 OHM | TK1345 | 108-1417-00 |
| A4A1A3L211 | 108-1417-00 | | | COIL,RF:45UH,2%,7 OHM | TK1345 | 108-1417-00 |
| A4A1A3L419 | 108-0800-00 | | | COIL,RF:FIXED,820 UH, +/- 10%, DCR 65 OHM, I MAX 40 MA,FERRITEAXIAL LEAD, MOLDED | 04072 | 9230-90 |
| A4A1A3R114 | 315-0221-00 | | | RES,FXD,FILM:220 OHM,5%,0.25W | 80009 | 315-0221-00 |
| A4A1A3R117 | 321-0351-00 | | | RES,FXD,FILM:44.2K OHM,1%,0.125W,TC=T0 | 07716 | CEAD44201F |
| A4A1A3R118 | 321-0917-07 | | | RES,FXD,FILM:27.2K OHM,0.1%,0.125W,TC=T9 | 57027 | RC55-D-27K2-B-R |
| A4A1A3R119 | 321-1755-07 | | | RES,FXD,FILM:65.7K OHM,0.1%,0.125W,TC=T9 | 80009 | 321-1755-07 |
| A4A1A3R213 | 322-3295-00 | | | RES,FXD:METAL FILM;11.5K OHM,1%,0.2W,TC=100 PPM;AXIAL,T&R,SMALL BODY | 80009 | 322-3295-00 |
| A4A1A3R214 | 321-0307-00 | | | RES,FXD,FILM:15.4K OHM,1%,0.125W,TC=T0 | 80009 | 321-0307-00 |
| A4A1A3R215 | 322-3324-00 | | | RES,FXD,FILM:23.2K OHM,1%,0.2W,TC=T0 | 91637 | CCF50-2F23201F |
| A4A1A3R216 | 322-3211-00 | | | RES,FXD,FILM:1.54K OHM,1%,0.2W,TC=T0 | 80009 | 322-3211-00 |
| A4A1A3R217 | 321-0351-00 | | | RES,FXD,FILM:44.2K OHM,1%,0.125W,TC=T0 | 07716 | CEAD44201F |
| A4A1A3R314 | 321-0332-00 | | | RES,FXD,FILM:28.0K OHM,1%,0.125W,TC=T0 | 07716 | CEAD28001F |
| A4A1A3R315 | 322-3344-00 | | | RES,FXD,FILM:37.4K OHM,1%,0.2W,TC=T0 | 80009 | 322-3344-00 |
| A4A1A3R316 | 322-3360-00 | | | RES,FXD,FILM:54.9K OHM,1%,0.2W,TC=T0 | 57668 | CRB20 FXE 54K9 |
| A4A1A3R317 | 322-3248-00 | | | RES,FXD,FILM:3.74K OHM,1%,0.2W,TC=T0 | 80009 | 322-3248-00 |
| A4A1A3R318 | 321-0351-00 | | | RES,FXD,FILM:44.2K OHM,1%,0.125W,TC=T0 | 07716 | CEAD44201F |
| A4A1A3R319 | 321-0917-07 | | | RES,FXD,FILM:27.2K OHM,0.1%,0.125W,TC=T9 | 57027 | RC55-D-27K2-B-R |
| A4A1A3R411 | 321-0351-00 | | | RES,FXD,FILM:44.2K OHM,1%,0.125W,TC=T0 | 07716 | CEAD44201F |
| A4A1A3R412 | 321-1755-07 | | | RES,FXD,FILM:65.7K OHM,0.1%,0.125W,TC=T9 | 80009 | 321-1755-07 |
| A4A1A3R413 | 321-0612-07 | | | RES,FXD,FILM:500 OHM,0.1%,0.125W,TC=T9 | 80009 | 321-0612-07 |
| A4A1A3R414 | 311-2226-00 | | | RES,VAR,NONWW:TRMR,50 OHM,20%,0.5W LINEARTAPE & REEL | TK1450 | GF06UT 50 OHM |
| A4A1A3R418 | 321-0612-07 | | | RES,FXD,FILM:500 OHM,0.1%,0.125W,TC=T9 | 80009 | 321-0612-07 |
| A4A1A3U116 | 156-1699-00 | | | MICROCKT,LINEAR:DUAL BI-FET,OPNL AMPL | 01295 | TL288CP |
| A4A1A3U116 | 156-1699-00 | 671-0716-02 | | MICROCKT,LINEAR:DUAL BI-FET,OPNL AMPL | 01295 | TL288CP |
| A4A1A3U218 | 156-1788-00 | | | IC,MISC:BIFET,ANALOG MUX;DUAL 4 CHANNEL;LF13509,DIP16.3,TUBE | 06665 | MUX240030P |
| A4A1A3U218 | 156-1788-00 | 671-0716-02 | | IC,MISC:BIFET,ANALOG MUX;DUAL 4 CHANNEL;LF13509,DIP16.3,TUBE | 06665 | MUX240030P |
| A4A1A3U318 | 156-1699-00 | | | MICROCKT,LINEAR:DUAL BI-FET,OPNL AMPL | 01295 | TL288CP |
| A4A1A3U318 | 156-1699-00 | 671-0716-02 | | MICROCKT,LINEAR:DUAL BI-FET,OPNL AMPL | 01295 | TL288CP |

| Component No. | Tektronix Part No. | Serial/Assembly No. Effective | Dscont | Name & Description | Mfr. Code | Mfr. Part No. |
|---|---|---|---|---|---|---|
| A4A1A4 | 671-0715-01 | 671-0695-01 | 671-0695-01 | CIRCUIT BD ASSY:LOWPASS FILTER | 80009 | 671-0715-01 |
| A4A1A4 | 671-0715-02 | 671-0695-01 | 671-0695-01 | CIRCUIT BD ASSY:LOW PASS FILTER | 80009 | 671-0715-02 |
| A4A1A4 | 671-1909-00 | 671-0695-02 | | CIRCUIT BD ASSY:IEEE LOW PASS FILTER | 80009 | 671-1909-00 |
| A4A1A4C217 | 283-0790-00 | | | CAP,FXD,MICA DI:850PF,1%,500V | 00853 | D195F851F0 |
| A4A1A4C219 | 283-0692-00 | 671-0715-01 | 671-0715-02 | CAP,FXD,MICA DI:670PF,1%,300V | 80009 | 283-0692-00 |
| A4A1A4C219 | 283-0631-00 | 671-1909-00 | | CAP,FXD,MICA DI:95PF,1%,500V | 80009 | 283-0631-00 |
| A4A1A4C316 | 283-0605-00 | 671-0715-01 | 671-0715-02 | CAP,FXD,MICA DI:678PF,1%,300V | 80009 | 283-0605-00 |
| A4A1A4C316 | 283-0667-00 | 671-1909-00 | | CAP,FXD,MICA DI:420PF,1%,500V | 80009 | 283-0667-00 |
| A4A1A4C317 | 283-0677-00 | 671-1909-00 | | CAP,FXD,MICA DI:82PF,1%,500V | 80009 | 283-0677-00 |
| A4A1A4C415 | 283-0637-00 | 671-0715-01 | 671-0715-02 | CAP,FXD,MICA DI:20PF,2.5%,500V | 80009 | 283-0637-00 |
| A4A1A4C417 | 283-0728-00 | 671-0715-01 | 671-0715-02 | CAP,FXD,MICA DI:120PF,1%,500V | 80009 | 283-0728-00 |
| A4A1A4C417 | 283-0640-00 | 671-1909-00 | | CAP,FXD,MICA DI:160PF,1%,500V | 80009 | 283-0640-00 |
| A4A1A4CR311 | 152-0141-02 | | | DIODE,SIG:,ULTRA FAST;40V,150MA,4NS,2PF;1N4152,DO-35,T&R | 80009 | 152-0141-02 |
| A4A1A4CR312 | 152-0141-02 | 671-1909-00 | | DIODE,SIG:,ULTRA FAST;40V,150MA,4NS,2PF;1N4152,DO-35,T&R | 80009 | 152-0141-02 |
| A4A1A4J112 | 131-2002-00 | | | CONN,BOX:: | TK1483 | TKO-05254-103 |
| A4A1A4J312 | 131-2002-00 | | | CONN,BOX:: | TK1483 | TKO-05254-103 |
| A4A1A4J412 | 131-2002-00 | | | CONN,BOX:: | TK1483 | TKO-05254-103 |
| A4A1A4L211 | 108-0016-00 | 671-0715-01 | 671-0715-02 | COIL,RF:FIXED,26UH | 80009 | 108-0016-00 |
| A4A1A4L211 | 108-0146-00 | 671-1909-00 | | COIL,RF: | 80009 | 108-0146-00 |
| A4A1A4L213 | 114-0332-00 | | | COIL,RF:VARIABLE,12-20UH | 80009 | 114-0332-00 |
| A4A1A4L314 | 108-0765-00 | 671-0715-01 | 671-0715-02 | COIL,RF:FIXED,17.1UH | TK1345 | 108-0765-00 |
| A4A1A4R112 | 321-0245-00 | 671-0715-01 | 671-0715-02 | RES,FXD,FILM:3.48K OHM,1%,0.125W,TC=T0 | 80009 | 321-0245-00 |
| A4A1A4R112 | 322-3254-00 | 671-1909-00 | | RES,FXD,FILM:4.32K OHM,1%,0.2W,TC=T0 | 80009 | 322-3254-00 |
| A4A1A4R114 | 311-2231-00 | 671-0715-01 | 671-0715-01 | RES,VAR,TRMR:CERMET;1K OHM,20%,0.5W,0.197 SQ,TOP ADJUST;T&R | TK1450 | GF06UT 1K |
| A4A1A4R114 | 311-2234-00 | 671-0715-02 | 671-0715-02 | RES,VAR,TRMR:CERMET;5K OHM,20%,0.5W,0.197 SQ,TOP ADJUST;T&R | TK1450 | GF06UT 5K |
| A4A1A4R114 | 311-2232-00 | 671-1909-00 | | RES,VAR,TRMR:CERMET,2K OHM,20%,0.5W,0.197 SQ,TOP ADJUST;T&R | TK1450 | GF06UT 2K |
| A4A1A4R414 | 321-0124-00 | 671-0715-01 | 671-0715-02 | RES,FXD,FILM:191 OHM,1%,0.125W, TC=T0 | 07716 | CEAD191R0F |
| A4A1A4R414 | 322-3126-00 | 671-1909-00 | | RES,FXD,FILM:200 OHM,1%,0.2W,TC=T0 | 80009 | 322-3126-00 |

| Component No. | Tektronix Part No. | Serial/Assembly No. Effective | Dscont | Name & Description | Mfr. Code | Mfr. Part No. |
|---|---|---|---|---|---|---|
| A4A1A5 | 671-0717-00 | 671-0695-02 | | CIRCUIT BD ASSY:NTSC BW LIMIT FILTER | 80009 | 671-0717-00 |
| A4A1A5C1 | 281-0716-00 | 671-0717-00 | | CAP,FXD,CER DI:13.8PF,1%,500V | TK1134 | 374-014C0G01389F |
| A4A1A5C2 | 281-0620-00 | 671-0717-00 | | CAP,FXD,CER DI:21PF,1%,500V[1] | 80009 | 281-0620-00 |
| A4A1A5C3 | 281-0772-00 | 671-0717-00 | | CAP,FXD,CER DI:4700PF,10%,100V | 04222 | SA101C472KAA |
| A4A1A5C5 | 281-0621-00 | 671-0717-00 | | CAP,FXD,CER DI:12PF,1%,500V | 52763 | 2RDPZZ007 12POLC |
| A4A1A5C6 | 283-0665-00 | 671-0717-00 | | CAP,FXD,MICA DI:190PF,1%,100V | 80009 | 283-0665-00 |
| A4A1A5C7 | 283-0776-00 | 671-0717-00 | | CAP,FXD,MICA DI:2130 PF,1%,500V | 80009 | 283-0776-00 |
| A4A1A5C8 | 281-0140-00 | 671-0717-00 | | CAP,VAR,CER DI:5-25PF,100V | 59660 | 518-038A-5-25 |
| A4A1A5CR1 | 152-0141-02 | 671-0717-00 | | DIODE,SIG:,ULTRA FAST;40V,150MA,4NS,2PF;1N4152,DO-35,T&R | 80009 | 152-0141-02 |
| A4A1A5J112 | 131-2002-00 | 671-0717-00 | | CONN,BOX:: | TK1483 | TKD-05254-103 |
| A4A1A5J312 | 131-2002-00 | 671-0717-00 | | CONN,BOX:: | TK1483 | TKD-05254-103 |
| A4A1A5J412 | 131-2002-00 | 671-0717-00 | | CONN,BOX:: | TK1483 | TKD-05254-103 |
| A4A1A5J413 | 131-0608-00 | 671-0717-00 | | TERMINAL,PIN:0.365 L X 0.025 BRZ GLD PL (QUANTITY 2) | 80009 | 131-0608-00 |
| A4A1A5J414 | 131-0608-00 | 671-0717-00 | | TERMINAL,PIN:0.365 L X 0.025 BRZ GLD PL (QUANTITY 2) | 80009 | 131-0608-00 |
| A4A1A5L1 | 120-1882-00 | 671-0717-00 | | TRANSFORMER,RF:VAR 4.8-5.3UH,PRESET TO 5.1UH,+/-1%,Q=200,RATIO 1:1,POT CORE | 80009 | 120-1882-00 |
| A4A1A5L2 | 114-0364-00 | 671-0717-00 | | COIL,RF:VARIABLE,1.42-1.68UH | 80009 | 114-0364-00 |
| A4A1A5L3 | 114-0473-00 | 671-0717-00 | | COIL,RF:VARIABLE,28-34UH,PRESET TO 30UH,+/-1%,Q 100,POT CORE | 80009 | 114-0473-00 |
| A4A1A5L4 | 114-0450-00 | 671-0717-00 | | COIL,RF:VAR,1.91UH-2.11UH,POT CORE | 54937 | 500-4728 |
| A4A1A5L5 | 114-0474-00 | 671-0717-00 | | COIL,RF:VARIABLE,7.7-9.0UH,PRESET TO 8.5UH,+/-1%,Q=180,POT CORE | 80009 | 114-0474-00 |
| A4A1A5L6 | 108-0509-00 | 671-0717-00 | | COIL,RF:FIXED,2.45UH +/-10%,AXIAL LEAD,CORE 276-0153-00,PKG | TK2042 | ORDER BY DESCR |
| A4A1A5P414 | 131-0993-00 | 671-0717-00 | | CONN,BOX:SHUNT/SHORTING,;FEMALE,STR,1 X 2,0.1 CTR,0.385 H,30 GOLD,BLACK,JUMPER; | 22526 | 65474-006 |
| A4A1A5R1 | 322-3126-07 | 671-0717-00 | | RES,FXD,FILM:200 OHM,0.1%,0.2W,TC=T9 | 91637 | CCF50-2-C200R0BT |
| A4A1A5R2 | 322-3254-00 | 671-0717-00 | | RES,FXD,FILM:4.32K OHM,1%,0.2W,TC=T0 | 80009 | 322-3254-00 |
| A4A1A5R3 | 322-3243-00 | 671-0717-00 | | RES,FXD:METAL FILM;3.32K OHM,1%,0.2W,TC=100 PPM;AXIAL,T&R,SMALL BODY | 91637 | CCF50-1-G33200F |
| A4A1A5R4 | 311-2270-00 | 671-0717-00 | | RES,VAR,TRMR:CERMET;10K OHM,20%,0.5W,0.197 SQ,SIDE ADJUST;T&A | 80009 | 311-2270-00 |

| Component No. | Tektronix Part No. | Serial/Assembly No. Effective | Dscont | Name & Description | Mfr. Code | Mfr. Part No. |
|---|---|---|---|---|---|---|
| A5 | 671-1051-00 | B022000 | B022006 | CIRCUIT BD ASSY:CPU II | 80009 | 671-1051-00 |
| A5 | 671-1051-01 | B022007 | B022030 | CIRCUIT BD ASSY:CPU II | 80009 | 671-1051-01 |
| A5 | 671-1051-02 | B022031 | B022149 | CIRCUIT BD ASSY:CPU II | 80009 | 671-1051-02 |
| A5 | 671-1051-03 | B022150 | B022293 | CIRCUIT BD ASSY:CPU II | 80009 | 671-1051-03 |
| A5 | 671-1051-04 | B022294 | B022601 | CIRCUIT BD ASSY:CPU II | 80009 | 671-1051-04 |
| A5 | 671-1051-05 | B022602 | B022999 | CIRCUIT BD ASSY:CPU | 80009 | 671-1051-05 |
| A5 | 671-1051-06 | B023000 | B030274 | CIRCUIT BD ASSY:CPU | 80009 | 671-1051-06 |
| A5 | 671-1051-07 | B030275 | | CIRCUIT BD ASSY:CPU | 80009 | 671-1051-07 |
| | | | | *ATTACHED PARTS* | | |
| | 105-0160-00 | | | EJECTOR,CKT BD:WHITE PLASTIC | 80009 | 105-0160-00 |
| | 214-1337-00 | | | PIN,SPRING:0.25 L X 0.103 OD,STL CD PL | 000BK | ORDER BY DESCR |
| | 386-5589-01 | | | PANEL,CPU:VM700A | 80009 | 386-5589-01 |
| | 131-0890-00 | | | SCREW LOCK:4-40 X 0.312 L HEX HD,STLCD PL (QUANTITY 4) | 71468 | D 20418-2 |
| | 211-0661-00 | | | SCR,ASSEM WSHR:4-40 X 0.25,PNH,STL,CD PL,PO Z,MACHINE (QUANTITY 4) | 01536 | 821-01655-024 |
| | 220-0098-00 | | | NUT BLOCK:4-40 THRU,ALUMINUM (QUANTITY 2) | 80009 | 220-0098-00 |
| | | | | *END ATTACHED PARTS* | | |
| A5BT706 | 146-0045-00 | | | BATTERY,DRY:3.4V,1.75AH,AA CELL | TK1320 | 15-51-04-410-000 |
| | | | | *ATTACHED PARTS* | | |
| | 343-0549-00 | | | STRAP,TIEDOWN,E:0.098 W X 4.0 L,ZYTEL (QUANTITY 2) | 06383 | PLT1M |
| | | | | *END ATTACHED PARTS* | | |
| A5C109 | 281-0775-01 | | | CAP,FXD,CER DI:0.1UF,20%,50V | 04222 | SA105E104MAA |
| A5C115 | 281-0775-01 | | | CAP,FXD,CER DI:0.1UF,20%,50V | 04222 | SA105E104MAA |
| A5C122 | 281-0775-01 | | | CAP,FXD,CER DI:0.1UF,20%,50V | 04222 | SA105E104MAA |
| A5C128 | 281-0775-01 | | | CAP,FXD,CER DI:0.1UF,20%,50V | 04222 | SA105E104MAA |
| A5C134 | 281-0775-01 | | | CAP,FXD,CER DI:0.1UF,20%,50V | 04222 | SA105E104MAA |
| A5C140 | 281-0775-01 | | | CAP,FXD,CER DI:0.1UF,20%,50V | 04222 | SA105E104MAA |
| A5C152 | 281-0775-01 | | | CAP,FXD,CER DI:0.1UF,20%,50V | 04222 | SA105E104MAA |
| A5C214 | 281-0775-01 | | | CAP,FXD,CER DI:0.1UF,20%,50V | 04222 | SA105E104MAA |
| A5C221 | 281-0775-01 | | | CAP,FXD,CER DI:0.1UF,20%,50V | 04222 | SA105E104MAA |
| A5C222 | 281-0775-01 | | | CAP,FXD,CER DI:0.1UF,20%,50V | 04222 | SA105E104MAA |
| A5C233 | 281-0775-01 | | | CAP,FXD,CER DI:0.1UF,20%,50V | 04222 | SA105E104MAA |
| A5C234 | 281-0775-01 | | | CAP,FXD,CER DI:0.1UF,20%,50V | 04222 | SA105E104MAA |
| A5C249 | 281-0775-01 | | | CAP,FXD,CER DI:0.1UF,20%,50V | 04222 | SA105E104MAA |
| A5C252 | 281-0775-01 | | | CAP,FXD,CER DI:0.1UF,20%,50V | 04222 | SA105E104MAA |
| A5C260 | 281-0775-01 | | | CAP,FXD,CER DI:0.1UF,20%,50V | 04222 | SA105E104MAA |
| A5C277 | 290-0932-00 | | | CAP,FXD,ELCTLT:390UF,+100-10%,15VDC | 80009 | 290-0932-00 |
| A5C310 | 281-0775-01 | | | CAP,FXD,CER DI:0.1UF,20%,50V | 04222 | SA105E104MAA |
| A5C317 | 281-0775-01 | | | CAP,FXD,CER DI:0.1UF,20%,50V | 04222 | SA105E104MAA |
| A5C333 | 281-0775-01 | | | CAP,FXD,CER DI:0.1UF,20%,50V | 04222 | SA105E104MAA |
| A5C349 | 281-0775-01 | | | CAP,FXD,CER DI:0.1UF,20%,50V | 04222 | SA105E104MAA |
| A5C364 | 281-0775-01 | | | CAP,FXD,CER DI:0.1UF,20%,50V | 04222 | SA105E104MAA |
| A5C404 | 281-0775-01 | | | CAP,FXD,CER DI:0.1UF,20%,50V | 04222 | SA105E104MAA |
| A5C420 | 281-0775-01 | | | CAP,FXD,CER DI:0.1UF,20%,50V | 04222 | SA105E104MAA |
| A5C429 | 290-0974-00 | | | CAP,FXD,ELCTLT:10UF,20%,50VDC | 55680 | UVX1H100MAA |
| A5C433 | 283-0423-00 | | | CAP,FXD,CER DI:0.22UF,+80-20%,50V | 04222 | MD015E224ZAA |
| A5C443 | 281-0775-01 | | | CAP,FXD,CER DI:0.1UF,20%,50V | 04222 | SA105E104MAA |
| A5C456 | 283-0423-00 | | | CAP,FXD,CER DI:0.22UF,+80-20%,50V | 04222 | MD015E224ZAA |
| A5C458 | 283-0423-00 | | | CAP,FXD,CER DI:0.22UF,+80-20%,50V | 04222 | MD015E224ZAA |
| A5C465 | 281-0775-01 | | | CAP,FXD,CER DI:0.1UF,20%,50V | 04222 | SA105E104MAA |
| A5C472 | 283-0423-00 | | | CAP,FXD,CER DI:0.22UF,+80-20%,50V | 04222 | MD015E224ZAA |
| A5C476 | 290-0974-00 | | | CAP,FXD,ELCTLT:10UF,20%,50VDC | 55680 | UVX1H100MAA |
| A5C519 | 290-0776-00 | | | CAP,FXD,ELCTLT:22UF,+50-20 %,10V | 55680 | UVX1A220MAA |
| A5C543 | 281-0775-01 | | | CAP,FXD,CER DI:0.1UF,20%,50V | 04222 | SA105E104MAA |
| A5C565 | 281-0775-01 | | | CAP,FXD,CER DI:0.1UF,20%,50V | 04222 | SA105E104MAA |
| A5C614 | 281-0775-01 | | | CAP,FXD,CER DI:0.1UF,20%,50V | 04222 | SA105E104MAA |

| Component No. | Tektronix Part No. | Serial/Assembly No. Effective | Dscont | Name & Description | Mfr. Code | Mfr. Part No. |
|---|---|---|---|---|---|---|
| A5C618 | 281-0775-01 | | | CAP,FXD,CER DI:0.1UF,20%,50V | 04222 | SA105E104MAA |
| A5C631 | 281-0775-01 | | | CAP,FXD,CER DI:0.1UF,20%,50V | 04222 | SA105E104MAA |
| A5C633 | 281-0775-01 | | | CAP,FXD,CER DI:0.1UF,20%,50V | 04222 | SA105E104MAA |
| A5C646 | 281-0775-01 | | | CAP,FXD,CER DI:0.1UF,20%,50V | 04222 | SA105E104MAA |
| A5C648 | 281-0775-01 | | | CAP,FXD,CER DI:0.1UF,20%,50V | 04222 | SA105E104MAA |
| A5C658 | 281-0775-01 | | | CAP,FXD,CER DI:0.1UF,20%,50V | 04222 | SA105E104MAA |
| A5C664 | 281-0775-01 | | | CAP,FXD,CER DI:0.1UF,20%,50V | 04222 | SA105E104MAA |
| A5C668 | 281-0775-01 | | | CAP,FXD,CER DI:0.1UF,20%,50V | 04222 | SA105E104MAA |
| A5C711 | 281-0775-01 | | | CAP,FXD,CER DI:0.1UF,20%,50V | 04222 | SA105E104MAA |
| A5C713 | 281-0775-01 | | | CAP,FXD,CER DI:0.1UF,20%,50V | 04222 | SA105E104MAA |
| A5C715 | 281-0775-01 | | | CAP,FXD,CER DI:0.1UF,20%,50V | 04222 | SA105E104MAA |
| A5C733 | 281-0775-01 | | | CAP,FXD,CER DI:0.1UF,20%,50V | 04222 | SA105E104MAA |
| A5C735 | 281-0775-01 | | | CAP,FXD,CER DI:0.1UF,20%,50V | 04222 | SA105E104MAA |
| A5C743 | 281-0775-01 | | | CAP,FXD,CER DI:0.1UF,20%,50V | 04222 | SA105E104MAA |
| A5C751 | 281-0775-01 | | | CAP,FXD,CER DI:0.1UF,20%,50V | 04222 | SA105E104MAA |
| A5C753 | 281-0775-01 | | | CAP,FXD,CER DI:0.1UF,20%,50V | 04222 | SA105E104MAA |
| A5C766 | 281-0775-01 | | | CAP,FXD,CER DI:0.1UF,20%,50V | 04222 | SA105E104MAA |
| A5C767 | 281-0775-01 | | | CAP,FXD,CER DI:0.1UF,20%,50V | 04222 | SA105E104MAA |
| A5C803 | 283-0167-00 | | | CAP,FXD,CER DI:0.1UF,10%,100V | 80009 | 283-0167-00 |
| A5C804 | 283-0051-00 | | | CAP,FXD,CER DI:0.0033UF,5%,100V | 80009 | 283-0051-00 |
| A5C805 | 283-0154-00 | | | CAP,FXD,CER DI:22PF,5%,50V | 05397 | C315C220J5G5CA |
| A5C806 | 283-0154-00 | | | CAP,FXD,CER DI:22PF,5%,50V | 05397 | C315C220J5G5CA |
| A5C807 | 281-0299-00 | | | CAP,VAR,CER DI:14PF,50V | 18736 | EP14 |
| A5C816 | 283-0066-00 | | | CAP,FXD,CER DI:2.5PF,+/-0.5PF,200V | 72982 | 8101-047C0J2590 |
| A5C824 | 281-0865-00 | | | CAP,FXD,CER DI:1000PF,5%,100V | 04222 | SA201A102JAA |
| A5C826 | 281-0775-01 | | | CAP,FXD,CER DI:0.1UF,20%,50V | 04222 | SA105E104MAA |
| A5C846 | 281-0775-01 | | | CAP,FXD,CER DI:0.1UF,20%,50V | 04222 | SA105E104MAA |
| A5C855 | 283-0185-01 | | | CAP,FXD,CER:SLC;2.5PF,+/- 0.1PF,50V,C0J,.15 0 X .150;RADIAL,BULK | 59660 | 8111TXXXC0J0259B |
| A5C858 | 283-0260-00 | | | CAP,FXD,CER DI:5.6PF,+/-0.25PF,200V | 04222 | SR152A5R6CAA |
| A5C874 | 281-0775-01 | | | CAP,FXD,CER DI:0.1UF,20%,50V | 04222 | SA105E104MAA |
| A5C879 | 281-0775-01 | | | CAP,FXD,CER DI:0.1UF,20%,50V | 04222 | SA105E104MAA |
| A5C883 | 290-0967-00 | | | CAP,FXD,ELCTLT:22UF,+50-10%,25V | 55680 | TVX1E220MAA |
| A5C886 | 283-0479-00 | | | CAP,FXD,CER DI:0.47UF,+80-20%,25V | 80009 | 283-0479-00 |
| A5C887 | 290-0973-00 | | | CAP,FXD,ELCTLT:100UF,20%,25VDC | 24165 | 513D107M025BB4D |
| A5C910 | 283-0167-00 | | | CAP,FXD,CER DI:0.1UF,10%,100V | 80009 | 283-0167-00 |
| A5C911 | 283-0167-00 | | | CAP,FXD,CER DI:0.1UF,10%,100V | 80009 | 283-0167-00 |
| A5C920 | 283-0359-00 | | | CAP,FXD,CER DI:1000PF,10%,200V | 04222 | SR212A102KAA |
| A5C921 | 283-0359-00 | | | CAP,FXD,CER DI:1000PF,10%,200V | 04222 | SR212A102KAA |
| A5C922 | 283-0359-00 | | | CAP,FXD,CER DI:1000PF,10%,200V | 04222 | SR212A102KAA |
| A5C923 | 283-0359-00 | | | CAP,FXD,CER DI:1000PF,10%,200V | 04222 | SR212A102KAA |
| A5C924 | 283-0359-00 | | | CAP,FXD,CER DI:1000PF,10%,200V | 04222 | SR212A102KAA |
| A5C925 | 283-0359-00 | | | CAP,FXD,CER DI:1000PF,10%,200V | 04222 | SR212A102KAA |
| A5C926 | 281-0775-01 | | | CAP,FXD,CER DI:0.1UF,20%,50V | 04222 | SA105E104MAA |
| A5C927 | 283-0359-00 | | | CAP,FXD,CER DI:1000PF,10%,200V | 04222 | SR212A102KAA |
| A5C942 | 283-0359-00 | | | CAP,FXD,CER DI:1000PF,10%,200V | 04222 | SR212A102KAA |
| A5C943 | 283-0359-00 | | | CAP,FXD,CER DI:1000PF,10%,200V | 04222 | SR212A102KAA |
| A5C960 | 281-0775-01 | | | CAP,FXD,CER DI:0.1UF,20%,50V | 04222 | SA105E104MAA |
| A5C961 | 283-0359-00 | | | CAP,FXD,CER DI:1000PF,10%,200V | 04222 | SR212A102KAA |
| A5C962 | 283-0359-00 | | | CAP,FXD,CER DI:1000PF,10%,200V | 04222 | SR212A102KAA |
| A5C963 | 283-0359-00 | | | CAP,FXD,CER DI:1000PF,10%,200V | 04222 | SR212A102KAA |
| A5C964 | 283-0359-00 | | | CAP,FXD,CER DI:1000PF,10%,200V | 04222 | SR212A102KAA |
| A5C965 | 283-0359-00 | | | CAP,FXD,CER DI:1000PF,10%,200V | 04222 | SR212A102KAA |
| A5C966 | 283-0359-00 | | | CAP,FXD,CER DI:1000PF,10%,200V | 04222 | SR212A102KAA |
| A5C967 | 283-0359-00 | | | CAP,FXD,CER DI:1000PF,10%,200V | 04222 | SR212A102KAA |
| A5C979 | 281-0775-01 | | | CAP,FXD,CER DI:0.1UF,20%,50V | 04222 | SA105E104MAA |
| A5C983 | 290-0967-00 | | | CAP,FXD,ELCTLT:22UF,+50-10%,25V | 55680 | TVX1E220MAA |
| A5C986 | 283-0479-00 | | | CAP,FXD,CER DI:0.47UF,+80-20%,25V | 80009 | 283-0479-00 |
| A5C987 | 290-0973-00 | | | CAP,FXD,ELCTLT:100UF,20%,25VDC | 24165 | 513D107M025BB4D |

| Component No. | Tektronix Part No. | Serial/Assembly No. Effective | Dscont | Name & Description | Mfr. Code | Mfr. Part No. |
|---|---|---|---|---|---|---|
| A5CR123 | 152-0725-00 | | | SEMICOND DVC,DI:SI,SCHOTTKY,20V,1.2PF,DO-35 | 21847 | A2X1582 |
| A5CR426 | 152-0322-00 | | | DIODE,SIG:SCHTKY,;15V,410MVF AT 1MA,1.2PF;5 082-2811,T&R | 80009 | 152-0322-00 |
| A5CR508 | 152-0322-00 | | | DIODE,SIG:SCHTKY,;15V,410MVF AT 1MA,1.2PF;5 082-2811,T&R | 80009 | 152-0322-00 |
| A5CR509 | 152-0322-00 | | | DIODE,SIG:SCHTKY,;15V,410MVF AT 1MA,1.2PF;5 082-2811,T&R | 80009 | 152-0322-00 |
| A5CR514 | 152-0322-00 | | | DIODE,SIG:SCHTKY,;15V,410MVF AT 1MA,1.2PF;5 082-2811,T&R | 80009 | 152-0322-00 |
| A5CR515 | 152-0322-00 | | | DIODE,SIG:SCHTKY,;15V,410MVF AT 1MA,1.2PF;5 082-2811,T&R | 80009 | 152-0322-00 |
| A5CR614 | 152-0141-02 | | | DIODE,SIG:,ULTRA FAST;40V,150MA,4NS,2PF;1N4 152,DO-35,T&R | 80009 | 152-0141-02 |
| A5CR759 | 152-0141-02 | | | DIODE,SIG:,ULTRA FAST;40V,150MA,4NS,2PF;1N4 152,DO-35,T&R | 80009 | 152-0141-02 |
| A5CR881 | 152-0066-00 | | | DIODE,RECT:,;400V,1A,IFSM = 30A;GP10G,DO-41 ,T&R,SAFETY CONTROLLED | 05828 | GP10G-020 |
| A5CR981 | 152-0066-00 | | | DIODE,RECT:,;400V,1A,IFSM = 30A;GP10G,DO-41 ,T&R,SAFETY CONTROLLED | 05828 | GP10G-020 |
| A5DS202 | 150-1157-00 | | | LT EMITTING DIO:GREEN,6.7MA | 15513 | PC080-G12 |
| A5DS203 | 150-1157-00 | | | LT EMITTING DIO:GREEN,6.7MA | 15513 | PC080-G12 |
| A5DS204 | 150-1157-00 | | | LT EMITTING DIO:GREEN,6.7MA | 15513 | PC080-G12 |
| A5DS205 | 150-1157-00 | | | LT EMITTING DIO:GREEN,6.7MA | 15513 | PC080-G12 |
| A5DS206 | 150-1157-00 | | | LT EMITTING DIO:GREEN,6.7MA | 15513 | PC080-G12 |
| A5DS207 | 150-1157-00 | | | LT EMITTING DIO:GREEN,6.7MA | 15513 | PC080-G12 |
| A5DS208 | 150-1157-00 | | | LT EMITTING DIO:GREEN,6.7MA | 15513 | PC080-G12 |
| A5DS209 | 150-1157-00 | | | LT EMITTING DIO:GREEN,6.7MA | 15513 | PC080-G12 |
| A5DS604 | 150-1020-00 | | | LT EMITTING DIO:RED,3MA MAX | 15513 | SP830719 |
| A5F283 | 159-0193-00 | | | FUSE,WIRE LEAD:10A,125V,5 SEC | 61857 | SP5-10A |
| A5F311 | 159-0205-00 | | | FUSE,WIRE LEAD:1A,125V,5 SECONDS | 75915 | 256 001 |
| A5FL920 | 119-3580-00 | | | FILTER,EMI: | TK2058 | ZJSR-5101-102TA |
| A5FL921 | 119-3580-00 | | | FILTER,EMI: | TK2058 | ZJSR-5101-102TA |
| A5FL922 | 119-3580-00 | | | FILTER,EMI: | TK2058 | ZJSR-5101-102TA |
| A5FL923 | 119-3580-00 | | | FILTER,EMI: | TK2058 | ZJSR-5101-102TA |
| A5FL924 | 119-3580-00 | | | FILTER,EMI: | TK2058 | ZJSR-5101-102TA |
| A5FL925 | 119-3580-00 | | | FILTER,EMI: | TK2058 | ZJSR-5101-102TA |
| A5FL927 | 119-3580-00 | | | FILTER,EMI: | TK2058 | ZJSR-5101-102TA |
| A5FL928 | 119-3580-00 | | | FILTER,EMI: | TK2058 | ZJSR-5101-102TA |
| A5FL929 | 119-3580-00 | | | FILTER,EMI: | TK2058 | ZJSR-5101-102TA |
| A5FL961 | 119-3580-00 | | | FILTER,EMI: | TK2058 | ZJSR-5101-102TA |
| A5FL962 | 119-3580-00 | | | FILTER,EMI: | TK2058 | ZJSR-5101-102TA |
| A5FL963 | 119-3580-00 | | | FILTER,EMI: | TK2058 | ZJSR-5101-102TA |
| A5FL964 | 119-3580-00 | | | FILTER,EMI: | TK2058 | ZJSR-5101-102TA |
| A5FL965 | 119-3580-00 | | | FILTER,EMI: | TK2058 | ZJSR-5101-102TA |
| A5FL966 | 119-3580-00 | | | FILTER,EMI: | TK2058 | ZJSR-5101-102TA |
| A5FL967 | 119-3580-00 | | | FILTER,EMI: | TK2058 | ZJSR-5101-102TA |
| A5J305 | 131-1425-00 | | | CONN,HDR:PCB,;MALE,RTANG,1 X 36,0.1 CTR,0.2 30 MLG X 0.090 TAIL,30 GOLD,STACKABLE;,, (QUANTITY 6) | 22526 | 65521-136 |
| A5J307 | 131-1425-00 | | | CONN,HDR:PCB,;MALE,RTANG,1 X 36,0.1 CTR,0.2 30 MLG X 0.090 TAIL,30 GOLD,STACKABLE;,, (QUANTITY 2) | 22526 | 65521-136 |
| A5J308 | 131-1426-00 | | | CONN,HDR:PCB,;MALE,RTANG,1 X 36,0.1 CTR,0.2 3 MLG X 0.195 TAIL,GOLD,STACKABLE;,, (QUANTITY 2) | 22526 | 65524-136 |
| A5J490 | 131-3517-00 | | | CONN,DIN:PCB,;FEMALE,RTANG,3 X 50,0.1 CTR,0 .504 MLG X 0.118 TAIL,30 GOLD;,, *MOUNTING PARTS* | 80009 | 131-3517-00 |
| | 210-0001-00 | | | WASHER,LOCK:#2 INTL,0.013 THK,STL (QUANTITY 2) | 77900 | 1202-00-00-0541C |

| Component No. | Tektronix Part No. | Serial/Assembly No. Effective | Dscont | Name & Description | Mfr. Code | Mfr. Part No. |
|---|---|---|---|---|---|---|
| | 210-0405-00 | | | NUT,PLAIN,HEX:2-56 X 0.188,BRS CD PL<br>(QUANTITY 2) | 73743 | 12157-50 |
| | 211-0185-00 | | | SCREW,MACHINE:2-56 X 0.438,PNH,STL<br>(QUANTITY 2)<br>*END MOUNTING PARTS* | TK0435 | ORDER BY DESCR |
| A5J906 | 131-1425-00 | | | CONN,HDR:PCB,;MALE,RTANG,1 X 36,0.1 CTR,0.2<br>30 MLG X 0.090 TAIL,30 GOLD,STACKABLE;,,<br>(QUANTITY 2) | 22526 | 65521-136 |
| A5J927 | 131-2199-00 | | | CONN,DSUB:<br>*MOUNTING PARTS* | 00779 | 747047-3 |
| | 210-0586-00 | | | NUT,PL,ASSEM WA:4-40 X 0.25,STL CD PL<br>(QUANTITY 2) | 78189 | 211-041800-00 |
| | 211-0012-00 | | | SCREW,MACHINE:4-40 X 0.375,PNH,STL<br>(QUANTITY 2)<br>*END MOUNTING PARTS* | 93907 | ORDER BY DESCR |
| A5J944 | 131-1426-00 | | | CONN,HDR:PCB,;MALE,RTANG,1 X 36,0.1 CTR,0.2<br>3 MLG X 0.195 TAIL,GOLD,STACKABLE;,,<br>(QUANTITY 2) | 22526 | 65524-136 |
| A5J946 | 131-1652-00 | | | CONN,CIRC::<br>*ATTACHED PARTS* | 80009 | 131-1652-00 |
| | 210-0012-00 | | | WASHER,LOCK:0.384 ID,INTL,0.022 THK,STL<br>*END ATTACHED PARTS* | 09772 | ORDER BY DESCR |
| A5J960 | 131-2199-00 | | | CONN,DSUB:<br>*MOUNTING PARTS* | 00779 | 747047-3 |
| | 210-0586-00 | | | NUT,PL,ASSEM WA:4-40 X 0.25,STL CD PL<br>(QUANTITY 2) | 78189 | 211-041800-00 |
| | 211-0012-00 | | | SCREW,MACHINE:4-40 X 0.375,PNH,STL<br>(QUANTITY 2)<br>*END MOUNTING PARTS* | 93907 | ORDER BY DESCR |
| A5K946 | 148-0076-00 | | | RLY,REED:FRM A,250MA,100V,COIL,5V,500 OHM | 80009 | 148-0076-00 |
| A5L920 | 120-0407-00 | | | XFMR,TOROID:5 TURNS,SINGLE,281,25.7 UH +/-<br>32% @ 40 KHZ,0.250 DIA X 0.160 H | 80009 | 120-0407-00 |
| A5L921 | 120-0407-00 | | | XFMR,TOROID:5 TURNS,SINGLE,281,25.7 UH +/-<br>32% @ 40 KHZ,0.250 DIA X 0.160 H | 80009 | 120-0407-00 |
| A5L923 | 120-0407-00 | | | XFMR,TOROID:5 TURNS,SINGLE,281,25.7 UH +/-<br>32% @ 40 KHZ,0.250 DIA X 0.160 H | 80009 | 120-0407-00 |
| A5L924 | 120-0407-00 | | | XFMR,TOROID:5 TURNS,SINGLE,281,25.7 UH +/-<br>32% @ 40 KHZ,0.250 DIA X 0.160 H | 80009 | 120-0407-00 |
| A5L963 | 120-0407-00 | | | XFMR,TOROID:5 TURNS,SINGLE,281,25.7 UH +/-<br>32% @ 40 KHZ,0.250 DIA X 0.160 H | 80009 | 120-0407-00 |
| A5L965 | 120-0407-00 | | | XFMR,TOROID:5 TURNS,SINGLE,281,25.7 UH +/-<br>32% @ 40 KHZ,0.250 DIA X 0.160 H | 80009 | 120-0407-00 |
| A5L966 | 120-0407-00 | | | XFMR,TOROID:5 TURNS,SINGLE,281,25.7 UH +/-<br>32% @ 40 KHZ,0.250 DIA X 0.160 H | 80009 | 120-0407-00 |
| A5P307 | 131-0993-00 | | | CONN,BOX:SHUNT/SHORTING,;FEMALE,STR,1 X 2,0<br>.1 CTR,0.385 H,30 GOLD,BLACK,JUMPER; | 22526 | 65474-006 |
| A5P308 | 131-0993-00 | | | CONN,BOX:SHUNT/SHORTING,;FEMALE,STR,1 X 2,0<br>.1 CTR,0.385 H,30 GOLD,BLACK,JUMPER; | 22526 | 65474-006 |
| A5Q426 | 151-0424-00 | | | TRANSISTOR,SIG:BIPOLAR,NPN;15V,500MA,SWITCH<br>ING;MPS2369A,TO-92 EBC | 80009 | 151-0424-00 |
| A5Q429 | 151-0424-00 | | | TRANSISTOR,SIG:BIPOLAR,NPN;15V,500MA,SWITCH<br>ING;MPS2369A,TO-92 EBC | 80009 | 151-0424-00 |
| A5Q522 | 151-0424-00 | | | TRANSISTOR,SIG:BIPOLAR,NPN;15V,500MA,SWITCH<br>ING;MPS2369A,TO-92 EBC | 80009 | 151-0424-00 |
| A5Q525 | 151-0424-00 | | | TRANSISTOR,SIG:BIPOLAR,NPN;15V,500MA,SWITCH<br>ING;MPS2369A,TO-92 EBC | 80009 | 151-0424-00 |
| A5Q529 | 151-0424-00 | | | TRANSISTOR,SIG:BIPOLAR,NPN;15V.500MA,SWITCH<br>ING;MPS2369A,TO-92 EBC | 80009 | 151-0424-00 |
| A5Q764 | 151-0273-00 | | | TRANSISTOR,SIG:BIPOLAR,NPN;30V,50MA,50MHZ,A<br>MPLIFIER;2N5088,TO-92 EBC | 80009 | 151-0273-00 |
| A5R116 | 315-0102-00 | | | RES,FXD,FILM:1K OHM,5%,0.25W | 80009 | 315-0102-00 |

| Component No. | Tektronix Part No. | Serial/Assembly No. Effective | Dscont | Name & Description | Mfr. Code | Mfr. Part No. |
|---|---|---|---|---|---|---|
| A5R123 | 315-0270-00 | | | RES,FXD,FILM:27 OHM,5%,0.25W | 80009 | 315-0270-00 |
| A5R124 | 315-0270-00 | | | RES,FXD,FILM:27 OHM,5%,0.25W | 80009 | 315-0270-00 |
| A5R125 | 315-0270-00 | | | RES,FXD,FILM:27 OHM,5%,0.25W | 80009 | 315-0270-00 |
| A5R127 | 315-0100-00 | | | RES,FXD,FILM:10 OHM,5%,0.25W | 19701 | 5043CX10RR00J |
| A5R128 | 315-0102-00 | | | RES,FXD,FILM:1K OHM,5%,0.25W | 80009 | 315-0102-00 |
| A5R129 | 315-0270-00 | | | RES,FXD,FILM:27 OHM,5%,0.25W | 80009 | 315-0270-00 |
| A5R145 | 315-0101-00 | | | RES,FXD,FILM:100 OHM,5%,0.25W | 80009 | 315-0101-00 |
| A5R175 | 315-0101-00 | | | RES,FXD,FILM:100 OHM,5%,0.25W | 80009 | 315-0101-00 |
| A5R177 | 307-0841-00 | | | RES NTWK,FXD,FI:(4)10 OHM,10%,0.3W | 91637 | CSC08A-03-100G |
| A5R272 | 307-0717-00 | | | RES NTWK,FXD,FI:4,100 OHM,2%,0.3W EACH | 80009 | 307-0717-00 |
| A5R281 | 315-0331-00 | | | RES,FXD,FILM:330 OHM,5%,0.25W | 80009 | 315-0331-00 |
| A5R311 | 307-0675-00 | | | RES NTWK,FXD,FI:(9),1K OHM,2%,1.25W | 11236 | 750-101-R1K OHM |
| A5R326 | 307-0841-00 | | | RES NTWK,FXD,FI:(4)10 OHM,10%,0.3W | 91637 | CSC08A-03-100G |
| A5R327 | 307-0841-00 | | | RES NTWK,FXD,FI:(4)10 OHM,10%,0.3W | 91637 | CSC08A-03-100G |
| A5R340 | 307-0841-00 | | | RES NTWK,FXD,FI:(4)10 OHM,10%,0.3W | 91637 | CSC08A-03-100G |
| A5R341 | 307-0841-00 | | | RES NTWK,FXD,FI:(4)10 OHM,10%,0.3W | 91637 | CSC08A-03-100G |
| A5R342 | 307-0841-00 | | | RES NTWK,FXD,FI:(4)10 OHM,10%,0.3W | 91637 | CSC08A-03-100G |
| A5R355 | 307-0841-00 | | | RES NTWK,FXD,FI:(4)10 OHM,10%,0.3W | 91637 | CSC08A-03-100G |
| A5R357 | 307-0841-00 | | | RES NTWK,FXD,FI:(4)10 OHM,10%,0.3W | 91637 | CSC08A-03-100G |
| A5R358 | 307-0841-00 | | | RES NTWK,FXD,FI:(4)10 OHM,10%,0.3W | 91637 | CSC08A-03-100G |
| A5R368 | 307-0445-00 | | | RES,NTWK:THICK FILM;(9) 4.7K OHM,2%,0.2W EA CH,TC=100 PPM;SIP10,PIN 1 COMMON | 91637 | MSP10A01472GD03 |
| A5R373 | 307-0841-00 | | | RES NTWK,FXD,FI:(4)10 OHM,10%,0.3W | 91637 | CSC08A-03-100G |
| A5R374 | 307-0841-00 | | | RES NTWK,FXD,FI:(4)10 OHM,10%,0.3W | 91637 | CSC08A-03-100G |
| A5R409 | 307-0650-00 | | | RES NTWK,FXD,FI:9,2.7K OHM,5%,0.150W | 11236 | 750-101-R2.7K |
| A5R419 | 315-0621-00 | | | RES,FXD,FILM:620 OHM,5%,0.25W | 80009 | 315-0621-00 |
| A5R420 | 315-0332-00 | | | RES,FXD,FILM:3.3K OHM,5%,0.25W | 80009 | 315-0332-00 |
| A5R421 | 315-0103-00 | | | RES,FXD,FILM:10K OHM,5%,0.25W | 80009 | 315-0103-00 |
| A5R426 | 315-0152-00 | | | RES,FXD,FILM:1.5K OHM,5%,0.25W | 80009 | 315-0152-00 |
| A5R427 | 315-0102-00 | | | RES,FXD,FILM:1K OHM,5%,0.25W | 80009 | 315-0102-00 |
| A5R428 | 315-0102-00 | | | RES,FXD,FILM:1K OHM,5%,0.25W | 80009 | 315-0102-00 |
| A5R429 | 315-0102-00 | | | RES,FXD,FILM:1K OHM,5%,0.25W | 80009 | 315-0102-00 |
| A5R508 | 315-0472-00 | | | RES,FXD,FILM:4.7K OHM,5%,0.25W | 80009 | 315-0472-00 |
| A5R514 | 315-0472-00 | | | RES,FXD,FILM:4.7K OHM,5%,0.25W | 80009 | 315-0472-00 |
| A5R520 | 315-0102-00 | | | RES,FXD,FILM:1K OHM,5%,0.25W | 80009 | 315-0102-00 |
| A5R521 | 315-0152-00 | | | RES,FXD,FILM:1.5K OHM,5%,0.25W | 80009 | 315-0152-00 |
| A5R525 | 307-0445-00 | | | RES,NTWK:THICK FILM;(9) 4.7K OHM,2%,0.2W EA CH,TC=100 PPM;SIP10,PIN 1 COMMON | 91637 | MSP10A01472GD03 |
| A5R526 | 315-0102-00 | | | RES,FXD,FILM:1K OHM,5%,0.25W | 80009 | 315-0102-00 |
| A5R527 | 315-0102-00 | | | RES,FXD,FILM:1K OHM,5%,0.25W | 80009 | 315-0102-00 |
| A5R528 | 315-0332-00 | | | RES,FXD,FILM:3.3K OHM,5%,0.25W | 80009 | 315-0332-00 |
| A5R541 | 307-0445-00 | | | RES,NTWK:THICK FILM;(9) 4.7K OHM,2%,0.2W EA CH,TC=100 PPM;SIP10,PIN 1 COMMON | 91637 | MSP10A01472GD03 |
| A5R556 | 307-0445-00 | | | RES,NTWK:THICK FILM;(9) 4.7K OHM,2%,0.2W EA CH,TC=100 PPM;SIP10,PIN 1 COMMON | 91637 | MSP10A01472GD03 |
| A5R572 | 307-0445-00 | | | RES,NTWK:THICK FILM;(9) 4.7K OHM,2%,0.2W EA CH,TC=100 PPM;SIP10,PIN 1 COMMON | 91637 | MSP10A01472GD03 |
| A5R580 | 307-0828-00 | | | RES NTWK,FXD,FI:4,33 OHM,2%,0.30W | 32997 | 4308R-102-330 |
| A5R612 | 315-0102-00 | | | RES,FXD,FILM:1K OHM,5%,0.25W | 80009 | 315-0102-00 |
| A5R613 | 315-0113-00 | | | RES,FXD,FILM:11K OHM,5%,0.25W | 80009 | 315-0113-00 |
| A5R614 | 315-0511-00 | | | RES,FXD,FILM:510 OHM,5%,0.25W | 80009 | 315-0511-00 |
| A5R615 | 315-0472-00 | | | RES,FXD,FILM:4.7K OHM,5%,0.25W | 80009 | 315-0472-00 |
| A5R625 | 307-0675-00 | | | RES NTWK,FXD,FI:(9),1K OHM,2%,1.25W | 11236 | 750-101-R1K OHM |
| A5R641 | 307-0675-00 | | | RES NTWK,FXD,FI:(9),1K OHM,2%,1.25W | 11236 | 750-101-R1K OHM |
| A5R656 | 307-0675-00 | | | RES NTWK,FXD,FI:(9),1K OHM,2%,1.25W | 11236 | 750-101-R1K OHM |
| A5R672 | 307-0675-00 | | | RES NTWK,FXD,FI:(9),1K OHM,2%,1.25W | 11236 | 750-101-R1K OHM |
| A5R673 | 307-0719-00 | | | RES NTWK,FXD,FI:9,1.5K OHM,2%,0.15W EACH | 32997 | 4310R101152 |
| A5R682 | 307-0675-00 | | | RES NTWK,FXD,FI:(9),1K OHM,2%,1.25W | 11236 | 750-101-R1K OHM |
| A5P724 | 315-0472-00 | | | RES,FXD,FILM:4.7K OHM,5%,0.25W | 80009 | 315-0472-00 |

| Component No. | Tektronix Part No. | Serial/Assembly No. Effective | Dscont | Name & Description | Mfr. Code | Mfr. Part No. |
|---|---|---|---|---|---|---|
| A5R725 | 315-0101-00 | | | RES,FXD,FILM:100 OHM,5%,0.25W | 80009 | 315-0101-00 |
| A5R726 | 307-0648-00 | | | RES NTWK,FXD,FI:8,100 OHM,2%,0.125 W | 80009 | 307-0648-00 |
| A5R733 | 315-0101-00 | | | RES,FXD,FILM:100 OHM,5%,0.25W | 80009 | 315-0101-00 |
| A5R736 | 307-0717-00 | | | RES NTWK,FXD,FI:4,100 OHM,2%,0.3W EACH | 80009 | 307-0717-00 |
| A5R752 | 315-0101-00 | | | RES,FXD,FILM:100 OHM,5%,0.25W | 80009 | 315-0101-00 |
| A5R759 | 315-0431-00 | | | RES,FXD,FILM:430 OHM,5%,0.25W | 80009 | 315-0431-00 |
| A5R760 | 307-0741-00 | | | RES NTWK,FXD,FI:7,3.3K OHM,2%,0.19W EACH | 80009 | 307-0741-00 |
| A5R773 | 307-0648-00 | | | RES NTWK,FXD,FI:8,100 OHM,2%,0.125 W | 80009 | 307-0648-00 |
| A5R785 | 315-0103-00 | | | RES,FXD,FILM:10K OHM,5%,0.25W | 80009 | 315-0103-00 |
| A5R811 | 315-0202-00 | | | RES,FXD,FILM:2K OHM,5%,0.25W | 80009 | 315-0202-00 |
| A5R823 | 307-0446-00 | | | RES NTWK,FXD,FI:10K OHM,20%,(9)RES | 80009 | 307-0446-00 |
| A5R836 | 307-0717-00 | | | RES NTWK,FXD,FI:4,100 OHM,2%,0.3W EACH | 80009 | 307-0717-00 |
| A5R871 | 315-0103-00 | | | RES,FXD,FILM:10K OHM,5%,0.25W | 80009 | 315-0103-00 |
| A5R905 | 315-0104-00 | | | RES,FXD,FILM:100K OHM,5%,0.25W | 80009 | 315-0104-00 |
| A5R910 | 315-0104-00 | | | RES,FXD,FILM:100K OHM,5%,0.25W | 80009 | 315-0104-00 |
| A5R911 | 315-0103-00 | | | RES,FXD,FILM:10K OHM,5%,0.25W | 80009 | 315-0103-00 |
| A5R927 | 307-0737-00 | | | RES NTWK,FXD,FI:10,6.2K OHM,2%,0.19 EACH | 80009 | 307-0737-00 |
| A5R960 | 307-0737-00 | | | RES NTWK,FXD,FI:10,6.2K OHM,2%,0.19 EACH | 80009 | 307-0737-00 |
| A5S405 | 260-2064-00 | | | SWITCH,ROCKER:(6)SPST,125MA,30VDC | 81073 | 76YYXXXS |
| A5TP106 | 214-4085-00 | | | TERM,TEST POINT:0.070 ID,0.220 H,0.063 DIA PCB,0.015 X 0.032 BRASS,W/ RED NYLON COLLAR | 26364 | 104-01-02 |
| A5TP184 | 214-4085-00 | | | TERM,TEST POINT:0.070 ID,0.220 H,0.063 DIA PCB,0.015 X 0.032 BRASS,W/ RED NYLON COLLAR | 26364 | 104-01-02 |
| A5TP457 | 214-4085-00 | | | TERM,TEST POINT:0.070 ID,0.220 H,0.063 DIA PCB,0.015 X 0.032 BRASS,W/ RED NYLON COLLAR | 26364 | 104-01-02 |
| A5TP906 | 214-4085-00 | | | TERM,TEST POINT:0.070 ID,0.220 H,0.063 DIA PCB,0.015 X 0.032 BRASS,W/ RED NYLON COLLAR | 26364 | 104-01-02 |
| A5TP981 | 214-4085-00 | | | TERM,TEST POINT:0.070 ID,0.220 H,0.063 DIA PCB,0.015 X 0.032 BRASS,W/ RED NYLON COLLAR | 26364 | 104-01-02 |
| A5U121 | 156-3106-00 | | | IC,DIGITAL:HCMOS,COUNTER;14-STAGE BINARY RIPPLE;74HC4020,DIP16.3,TUBE | 02735 | CD74HC4020E |
| A5U128 | 156-2321-00 | | | IC,DIGITAL:ASTTL,GATE;QUAD 2-INPUT AND;74AS08,DIP14.3,TUBE | 01295 | SN74AS08N3 |
| A5U134 | 156-2340-00 | | | IC,DIGITAL:ASTTL,GATE;DUAL 4-INPUT NAND;74AS20,DIP14.3,TUBE | 80009 | 156-2340-00 |
| A5U143 | 160-5137-00 | | | MICROCKT,DGTL:OCTAL 20 INP AND/OR,PRGM | 80009 | 160-5137-00 |
| | | | | *MOUNTING PARTS* | | |
| | 136-0925-00 | | | SOCKET,DIP:: | 91506 | 224-AG30D |
| | | | | *END MOUNTING PARTS* | | |
| A5U146 | 156-2167-00 | | | IC,DIGITAL:ASTTL,GATE;HEX INV BUFFER;74AS1004,DIP14.3,TUBE | 01295 | SN74AS1004N3 |
| A5U162 | 160-7168-00 | 671-1051-00 | 671-1051-00 | MICROCKT,DGTL:CMOS,65536 X 8 EPROM,W/3 STATE OUT,PRGM,27C512,DIP28 | 80009 | 160-7168-00 |
| A5U162 | 160-7168-01 | 671-1051-01 | 671-1051-01 | MICROCKT,DGTL:CMOS,65536 X 8 EPROM,W/3 STATE OUT,PRGM,27C512,DIP28 | 80009 | 160-7168-01 |
| A5U162 | 160-7168-02 | 671-1051-02 | 671-1051-02 | MICROCKT,DGTL:CMOS,65536 X 8 EPROM,W/3 STATE OUT,PRGM,27C512,DIP28 | 80009 | 160-7168-02 |
| A5U162 | 160-7282-00 | 671-1051-03 | 671-1051-03 | MICROCKT,DGTL:CMOS,65536 X 8 EPROM,W/3 STATE OUT,PRGM,27C512,DIP28 | 80009 | 160-7282-00 |
| A5U162 | 160-7282-01 | 671-1051-04 | 671-1051-04 | MICROCKT,DGTL:CMOS,65536 X 8 EPROM,W/3 STATE OUT,PRGM,27C512,DIP28 | 80009 | 160-7282-01 |
| A5U162 | 160-7282-02 | 671-1051-05 | 671-1051-05 | MICROCKT,DGTL:CMOS,65536 X 8 EPROM,W/3 STATE OUT,PRGM,27C512,DIP28 | 80009 | 160-7282-02 |
| A5U162 | 160-7282-03 | 671-1051-06 | 671-1051-06 | MICROCKT,DGTL:CMOS,65536 X 8 EPROM,W/3 STATE OUT,PRGM,27C512,DIP28 | 80009 | 160-7282-03 |
| A5U162 | 160-7282-04 | 671-1051-07 | | IC,DIGITAL:CMOS,EPROM;65536 X 8,W/3 STATE OUT,PRGM 156-3381-00,27C512,DIP28.6 | 80009 | 160-7282-04 |
| | | | | *MOUNTING PARTS* | | |
| | 136-0755-00 | | | SOCKET,DIP: | 09922 | DILB28P-108 |
| | | | | *END MOUNTING PARTS* | | |

| Component No. | Tektronix Part No. | Serial/Assembly No. Effective | Dscont | Name & Description | Mfr. Code | Mfr. Part No. |
|---|---|---|---|---|---|---|
| A5U209 | 156-1998-00 | | | IC,DIGITAL:ALSTTL,FLIP FLOP;OCTAL D-TYPE, W /CLEAR;74ALS273,DIP20.3 | 01295 | SN74ALS273 |
| | | | | *MOUNTING PARTS* | | |
| | 136-0752-00 | | | SKT,PL-IN ELEK:MICROCIRCUIT,20 DIP | 09922 | DILB20P-108 |
| | | | | *END MOUNTING PARTS* | | |
| A5U213 | 160-5548-00 | | | IC,DIGITAL:STTL,PLD;PAL,16R4,25NS,28.5MHZ,1 80MA,PRGM 156-2123-00;16R4A,DIP20.3 | 80009 | 160-5548-00 |
| | | | | *MOUNTING PARTS* | | |
| | 136-0752-00 | | | SKT,PL-IN ELEK:MICROCIRCUIT,20 DIP | 09922 | DILB20P-108 |
| | | | | *END MOUNTING PARTS* | | |
| A5U216 | 156-2338-00 | | | IC,DIGITAL:ASTTL,FLIP FLOP;DUAL D-TYPE;74AS 74,DIP14.3,TUBE | 80009 | 156-2338-00 |
| A5U227 | 156-2324-00 | | | IC,DIGITAL:ASTTL,GATE;TRIPLE 3-INPUT NOR;74 AS27,DIP14.3,SCRN | 01295 | SN74AS27N |
| A5U228 | 156-2496-00 | | | IC,DIGITAL:ASTTL,GATE;TRIPLE 3-INPUT NAND;7 4AS10,DIP14.3,TUBE | 01295 | 74AS10N |
| A5U241 | 156-2613-00 | | | IC,DIGITAL:ASTTL,LATCH;OCTAL D-TYPE TRANSPA RENT, 3-STATE;74AS573,DIP20.3,TUBE | 80009 | 156-2613-00 |
| | | | | *MOUNTING PARTS* | | |
| | 136-0752-00 | | | SKT,PL-IN ELEK:MICROCIRCUIT,20 DIP | 09922 | DILB20P-108 |
| | | | | *END MOUNTING PARTS* | | |
| A5U243 | 160-5138-00 | | | MICROCKT,DGTL:OCTAL 20 INP AND/OR,PRGM | 80009 | 160-5138-00 |
| | | | | *MOUNTING PARTS* | | |
| | 136-0925-00 | | | SOCKET,DIP:: | 91506 | 224-AG30D |
| | | | | *END MOUNTING PARTS* | | |
| A5U255 | 156-2235-00 | | | IC,DIGITAL:ASTTL,GATE;QUAD 2-INPUT OR BUFFE R/DRIVER;74AS1032A,DIP14.3,TUBE | 80009 | 156-2235-00 |
| A5U262 | 156-1842-00 | | | IC,MEMORY:CMOS,SRAM;8K X 8,150NS,OE;,DIP28. 6 | 80009 | 156-1842-00 |
| | | | | *MOUNTING PARTS* | | |
| | 136-0755-00 | | | SOCKET,DIP: | 09922 | DILB28P-108 |
| | | | | *END MOUNTING PARTS* | | |
| A5U268 | 156-1748-02 | | | IC,DIGITAL:ALSTTL,TRANSCEIVER;OCTAL NONINV, 3-STATE;74ALS245,DIP20.3,TUBE | 01295 | SN74ALS245AN3 |
| | | | | *MOUNTING PARTS* | | |
| | 136-0752-00 | | | SKT,PL-IN ELEK:MICROCIRCUIT,20 DIP | 09922 | DILB20P-108 |
| | | | | *END MOUNTING PARTS* | | |
| A5U325 | 156-2434-00 | | | IC,DIGITAL:ASTTL,BUFFER/DRIVER;NONINV OCTAL , DRIVER, 3-STATE;74AS244,DIP20.3,TUBE | 80009 | 156-2434-00 |
| | | | | *MOUNTING PARTS* | | |
| A5U325 | 136-0752-00 | | | SKT,PL-IN ELEK:MICROCIRCUIT,20 DIP | 09922 | DILB20P-108 |
| | | | | *END MOUNTING PARTS* | | |
| A5U341 | 156-2434-00 | | | IC,DIGITAL:ASTTL,BUFFER/DRIVER;NONINV OCTAL , DRIVER, 3-STATE;74AS244,DIP20.3,TUBE | 80009 | 156-2434-00 |
| | | | | *MOUNTING PARTS* | | |
| | 136-0752-00 | | | SKT,PL-IN ELEK:MICROCIRCUIT,20 DIP | 09922 | DILB20P-108 |
| | | | | *END MOUNTING PARTS* | | |
| A5U356 | 156-2434-00 | | | IC,DIGITAL:ASTTL,BUFFER/DRIVER;NONINV OCTAL , DRIVER, 3-STATE;74AS244,DIP20.3,TUBE | 80009 | 156-2434-00 |
| | | | | *MOUNTING PARTS* | | |
| | 136-0752-00 | | | SKT,PL-IN ELEK:MICROCIRCUIT,20 DIP | 09922 | DILB20P-108 |
| | | | | *END MOUNTING PARTS* | | |
| A5U372 | 156-2434-00 | | | IC,DIGITAL:ASTTL,BUFFER/DRIVER;NONINV OCTAL , DRIVER, 3-STATE;74AS244,DIP20.3,TUBE | 80009 | 156-2434-00 |
| | | | | *MOUNTING PARTS* | | |
| | 136-0752-00 | | | SKT,PL-IN ELEK:MICROCIRCUIT,20 DIP | 09922 | DILB20P-108 |
| | | | | *END MOUNTING PARTS* | | |
| A5U410 | 156-2392-00 | | | IC,DIGITAL:HCMOS,GATE;HEX INV, SCHMITT TRIG ;74HC14,DIP14.3,TUBE | 80009 | 156-2392-00 |
| A5U413 | 156-2391-00 | | | IC,DIGITAL:ALSTTL,BUFFER/DRIVER;OCTAL NONIN V, 3-STATE;74ALS541,DIP20.3,TUBE | 80009 | 156-2391-00 |
| | | | | *MOUNTING PARTS* | | |

| Component No. | Tektronix Part No. | Serial/Assembly No. Effective | Dscont | Name & Description | Mfr. Code | Mfr. Part No. |
|---|---|---|---|---|---|---|
| | 136-0752-00 | | | SKT,PL-IN ELEK:MICROCIRCUIT,20 DIP<br>*END MOUNTING PARTS* | 09922 | DILB20P-108 |
| A5U420 | 156-2396-00 | | | IC,MISC: | 01295 | TL7705 ACP |
| A5U422 | 156-2392-00 | | | IC,DIGITAL:HCMOS,GATE;HEX INV, SCHMITT TRIG ;74HC14,DIP14.3,TUBE | 80009 | 156-2392-00 |
| A5U443 | 156-2515-00 | | | IC,PROCESSOR:HCMOS,MICROPROCESSOR;32-BIT,16 .7MHZ;68020,PGA114<br>*MOUNTING PARTS* | 80009 | 156-2515-00 |
| | 136-0878-00 | | | SOCKET,PGA:<br>*END MOUNTING PARTS* | 00779 | 916223-3 |
| A5U465 | 156-2616-00 | | | IC,PROCESSOR:HCMOS,COPROCESSOR;FLOATING POI NT,16.67MHZ;68881,PGA68<br>*MOUNTING PARTS* | 80009 | 156-2616-00 |
| | 136-0849-00 | | | SKT,PL-IN ELEK:<br>*END MOUNTING PARTS* | 00779 | 916220-2 |
| A5U510 | 156-3062-00 | | | IC,DIGITAL:HCMOS,GATE;QUAD 2-INPUT NAND,SCH MITT TRIGGER;74HC132, DIP14.3,TUBE | 01295 | SN 74HC132N |
| A5U624 | 156-2391-00 | | | IC,DIGITAL:ALSTTL,BUFFER/DRIVER;OCTAL NONIN V, 3-STATE;74ALS541,DIP20.3,TUBE<br>*MOUNTING PARTS* | 80009 | 156-2391-00 |
| | 136-0752-00 | | | SKT,PL-IN ELEK:MICROCIRCUIT,20 DIP<br>*END MOUNTING PARTS* | 09922 | DILB20P-108 |
| A5U625 | 156-2930-00 | | | IC,DIGITAL:ASTTL,BUS TRANSCEIVER;OCTAL, NON INV, 3-STATE;74AS245,DIP20.3,TUBE<br>*MOUNTING PARTS* | 01295 | SN74AS245N |
| | 136-0752-00 | | | SKT,PL-IN ELEK:MICROCIRCUIT,20 DIP<br>*END MOUNTING PARTS* | 09922 | DILB20P-108 |
| A5U638 | 160-5142-00 | | | MICROCKT,DGTL:STTL,OCTAL 16 INP I/O,PRGM<br>*MOUNTING PARTS* | 80009 | 160-5142-00 |
| A5U638 | 136-0752-00 | | | SKT,PL-IN ELEK:MICROCIRCUIT,20 DIP<br>*END MOUNTING PARTS* | 09922 | DILB20P-108 |
| A5U641 | 156-2930-00 | | | IC,DIGITAL:ASTTL,BUS TRANSCEIVER;OCTAL, NON INV, 3-STATE;74AS245,DIP20.3,TUBE<br>*MOUNTING PARTS* | 01295 | SN74AS245N |
| A5U641 | 136-0752-00 | | | SKT,PL-IN ELEK:MICROCIRCUIT,20 DIP<br>*END MOUNTING PARTS* | 09922 | DILB20P-108 |
| A5U652 | 156-2928-00 | | | IC,DIGITAL:ASTTL,FLIP FLOP;HEX D-TYPE, CLEA R;74AS174,DIP16.3,TUBE | 01295 | SN74AS174N |
| A5U656 | 156-2930-00 | | | IC,DIGITAL:ASTTL,BUS TRANSCEIVER;OCTAL, NON INV, 3-STATE;74AS245,DIP20.3,TUBE<br>*MOUNTING PARTS* | 01295 | SN74AS245N |
| A5U656 | 136-0752-00 | | | SKT,PL-IN ELEK:MICROCIRCUIT,20 DIP<br>*END MOUNTING PARTS* | 09922 | DILB20P-108 |
| A5U663 | 156-2968-00 | | | IC,DIGITAL:ASTTL,GATE;TRIPLE 3-INPUT AND;74 AS11.DIP14.3,NOT FOR | 80009 | 156-2968-00 |
| A5U672 | 156-2930-00 | | | IC,DIGITAL:ASTTL,BUS TRANSCEIVER;OCTAL, NON INV, 3-STATE;74AS245,DIP20.3,TUBE<br>*MOUNTING PARTS* | 01295 | SN74AS245N |
| A5U672 | 136-0752-00 | | | SKT,PL-IN ELEK:MICROCIRCUIT,20 DIP<br>*END MOUNTING PARTS* | 09922 | DILB20P-108 |
| A5U674 | 156-1252-00 | | | IC,DIGITAL:LSTTL,MUX/ENCODER;8-TO-3 PRIORIT Y ENCODER;74LS148,DIP16.3,TUBE | 01295 | SN74LS148N P3 |
| A5U716 | 156-2463-00 | | | IC,DIGITAL:HCMOS,GATE;QUAD 2-INPUT OR;74HC3 2,DIP14.3 | 18324 | 74HC32N |
| A5U719 | 156-3062-00 | | | IC,DIGITAL:HCMOS,GATE;QUAD 2-INPUT NAND,SCH MITT TRIGGER;74HC132, DIP14.3,TUBE | 01295 | SN 74HC132N |
| A5U724 | 156-2292-00 | | | IC,DIGITAL:ALSTTL,TRANSCEIVER;OCTAL NONINV, 3-STATE;74ALS652,DIP24.3,TUBE<br>*MOUNTING PARTS* | 80009 | 156-2292-00 |
| A5U724 | 136-0925-00 | | | SOCKET,DIP::<br>*END MOUNTING PARTS* | 91506 | 224-AG30D |
| A5U735 | 160-5141-00 | | | MICROCKT,DGTL:QUAD 20 INP RGTR AND/OR,PRGM<br>*MOUNTING PARTS* | 80009 | 160-5141-00 |

| Component No. | Tektronix Part No. | Serial/Assembly No. Effective | Dscont | Name & Description | Mfr. Code | Mfr. Part No. |
|---|---|---|---|---|---|---|
| | 136-0925-00 | | | SOCKET,DIP:: | 91506 | 224-AG30D |
| | | | | *END MOUNTING PARTS* | | |
| A5U742 | 160-5139-00 | | | MICROCKT,DGTL:OCTAL 20 INP AND/OR,PRGM | 80009 | 160-5139-00 |
| | | | | *MOUNTING PARTS* | | |
| | 136-0925-00 | | | SOCKET,DIP:: | 91506 | 224-AG30D |
| | | | | *END MOUNTING PARTS* | | |
| A5U744 | 160-5140-00 | | | MICROCKT,DGTL:OCTAL 20 INP AND/OR,PRGM | 80009 | 160-5140-00 |
| | | | | *MOUNTING PARTS* | | |
| | 136-0925-00 | | | SOCKET,DIP:: | 91506 | 224-AG30D |
| | | | | *END MOUNTING PARTS* | | |
| A5U758 | 156-2928-00 | | | IC,DIGITAL:ASTTL,FLIP FLOP;HEX D-TYPE, CLEAR;74AS174,DIP16.3,TUBE | 01295 | SN74AS174N |
| A5U760 | 156-2928-00 | | | IC,DIGITAL:ASTTL,FLIP FLOP;HEX D-TYPE, CLEAR;74AS174,DIP16.3,TUBE | 01295 | SN74AS174N |
| A5U772 | 156-2391-00 | | | IC,DIGITAL:ALSTTL,BUFFER/DRIVER;OCTAL NONINV, 3-STATE;74ALS541,DIP20.3,TUBE | 80009 | 156-2391-00 |
| | | | | *MOUNTING PARTS* | | |
| | 136-0752-00 | | | SKT,PL-IN ELEK:MICROCIRCUIT,20 DIP | 09922 | DILB20P-108 |
| | | | | *END MOUNTING PARTS* | | |
| A5U773 | 156-2377-00 | | | IC,DIGITAL:ASTTL,MUX;QUAD 2-TO-1 DATA SELECTOR, 3-STATE;74AS257,DIP16.3,TUBE | 80009 | 156-2377-00 |
| A5U783 | 156-2178-00 | | | IC,DIGITAL:ALSTTL,GATE;QUAD 2-INPUT NAND BUFFER, OC;74ALS38,DIP14.3,TUBE | 01295 | SN74ALS38AN3 |
| A5U818 | 156-2478-00 | | | IC,PROCESSOR:CMOS,PERIPHERAL;RTC, CLOCK CALENDAR;ICM7170,DIP24.3 | 32293 | ICM7170CPG/IPG |
| | | | | *MOUNTING PARTS* | | |
| | 136-0751-00 | | | SOCKET DIP:: | 09922 | DILB24P108 |
| | | | | *END MOUNTING PARTS* | | |
| A5U836 | 156-2991-00 | | | IC,MEMORY:CMOS,NVRAM;8K X 8,200NS,SRAM,INTEGRAL BATTERY;,DIP28.6SAFETY CONTROLLED | 80009 | 156-2991-00 |
| A5U859 | 156-2103-00 | | | IC,DIGITAL:DUAL ASYNC RCVR/XMTR(DUART) | 04713 | MC68681P |
| | | | | *MOUNTING PARTS* | | |
| | 136-0757-00 | | | SOCKET,DIP: | 09922 | DILB40P-108 |
| | | | | *END MOUNTING PARTS* | | |
| A5U874 | 156-3511-00 | | | IC,MISC: | 80009 | 156-3511-00 |
| | | | | *MOUNTING PARTS* | | |
| | 136-0756-00 | | | SOCKET,DIP:PCB,;FEMALE,STR,2 X 9,18 POS,0.1 X 0.3 CTR,0.175 H X 0.130 TAIL,BECU,TIN | 09922 | DILB18P-108 |
| | | | | *END MOUNTING PARTS* | | |
| A5U882 | 156-1160-00 | | | IC,LINEAR:BIPOLAR,VOLTAGE REGULATOR;POSITIVE,12V,100MA,4%;LM78L12ACH,TO-39 | 80009 | 156-1160-00 |
| A5U933 | 156-3511-00 | | | IC,MISC: | 80009 | 156-3511-00 |
| | | | | *MOUNTING PARTS* | | |
| | 136-0756-00 | | | SOCKET,DIP:PCB,;FEMALE,STR,2 X 9,18 POS,0.1 X 0.3 CTR,0.175 H X 0.130 TAIL,BECU,TIN | 09922 | DILB18P-108 |
| | | | | *END MOUNTING PARTS* | | |
| A5U965 | 156-0645-02 | | | IC,DIGITAL:LSTTL,GATES;DUPLICATE OF 156-0645-00;74LS14,DIP14.3,TUBE | 80009 | 156-0645-02 |
| A5U982 | 156-1207-00 | | | IC,LINEAR:BIPOLAR,VOLTAGE REGULATOR;NEGATIVE,-12V,500MA,3%;LM320H-12,TO-39 | 80009 | 156-1207-00 |
| A5VR521 | 152-0227-00 | | | DIODE,ZENER:,;6.2V,5%,0.4W;1N753A FMLY,DO-35 OR 7,TR | 80009 | 152-0227-00 |
| A5VR614 | 152-0760-00 | | | DIODE,ZENER:,;6.2V,2%,0.4W;1N753C FMLY,DO-7 OR 35 | 80009 | 152-0760-00 |
| A5W941 | 131-0566-00 | | | BUS,CONDUCTOR:DUMMY RES,0.094 OD X 0.225 L | 80009 | 131-0566-00 |
| A5W974 | 131-0566-00 | | | BUS,CONDUCTOR:DUMMY RES,0.094 OD X 0.225 L | 80009 | 131-0566-00 |
| A5Y116 | 119-2624-00 | | | OSCILLATOR,RF:33.333MHZ, +/- 0.005%,TTL, 4 PIN 14 PIN DIP COMPATIBLE | 14301 | 012-405-02183 |
| A5Y811 | 158-0361-00 | | | XTAL UNIT,QTZ:1.048576MHZ,0.001% | 59492 | 150-19240 |
| | | | | *ATTACHED PARTS* | | |
| | 346-0032-00 | | | STRAP,RETAINING:0.075 DIA X 4.0 L,MLD RBR | 98159 | 2829-75-4 |
| | | | | *END ATTACHED PARTS* | | |

| Component No. | Tektronix Part No. | Serial/Assembly No. Effective | Dscont | Name & Description | Mfr. Code | Mfr. Part No. |
|---|---|---|---|---|---|---|
| A5Y856 | 158-0271-00 | | | XTAL UNIT,QTZ:3.6864MHZ,700PPM,SERIES,ESR 1 20 OHMS,HC-18/U OR HC-49UPKG | 61429 | FOX-0368S |
| | | | | *MOUNTING PARTS* | | |
| | 352-0130-01 | | | HLDR,XTAL UNIT:STEEL TIN PL | 80009 | 352-0130-01 |
| | | | | *END MOUNTING PARTS* | | |

| Component No. | Tektronix Part No. | Serial/Assembly No. Effective | Dscont | Name & Description | Mfr. Code | Mfr. Part No. |
|---|---|---|---|---|---|---|
| A6 | 672-1319-00 | B022000 | B022293 | CIRCUIT BD ASSY:EPROM | 80009 | 672-1319-00 |
| A6 | 672-1319-02 | B022294 | B022761 | CIRCUIT BD ASSY:EPROM | 80009 | 672-1319-02 |
| A6 | 672-1319-03 | B022762 | B023176 | CIRCUIT BD ASSY:EPROM | 80009 | 672-1319-03 |
| A6 | 671-1910-00 | B023177 | | CIRCUIT BD ASSY:FLASH EPROM/NVRAM,4M | 80009 | 671-1910-00 |
| A6 | 671-1910-01 | B030768 | | CIRCUIT BD ASSY:FLASH EPROM/NVRAM,5M (OPTION 11 ONLY) | 80009 | 671-1910-01 |
| A6 | 672-1346-00 | B022609 | B022725 | CIRCUIT BD ASSY:EPROM | 80009 | 672-1346-00 |
| A6 | 672-1346-01 | B022726 | B023000 | CIRCUIT BD ASSY:EPROM | 80009 | 672-1346-01 |
| A6 | 671-1910-00 | B023001 | B030767 | CIRCUIT BD ASSY:FLASH EPROM/NVRAM,4M | 80009 | 671-1910-00 |
| A6 | 671-1910-01 | B030768 | | CIRCUIT BD ASSY:FLASH EPROM/NVRAM,5M (OPTION 01 ONLY) | 80009 | 671-1910-01 |
| A6 | 672-0283-00 | B022609 | B022714 | CIRCUIT BD ASSY:EPROM | 80009 | 672-0283-00 |
| A6 | 672-0283-01 | B022715 | B022954 | CIRCUIT BD ASSY:EPROM | 80009 | 672-0283-01 |
| A6 | 671-1910-00 | B022955 | B030767 | CIRCUIT BD ASSY:FLASH EPROM/NVRAM,4M | 80009 | 671-1910-00 |
| A6 | 671-1910-01 | B030768 | | CIRCUIT BD ASSY:FLASH EPROM/NVRAM,5M (OPTION 01,11 DUAL ONLY) | 80009 | 671-1910-01 |
| | | | | *ATTACHED PARTS* | | |
| | 105-0160-00 | | | EJECTOR,CKT BD:WHITE PLASTIC | 80009 | 105-0160-00 |
| | 214-1337-00 | | | PIN,SPRING:0.25 L X 0.103 OD,STL CD PL | 000BK | ORDER BY DESCR |
| | 386-5591-01 | 672-0283-00 | 672-0283-01 | PANEL,ROM:VM700A | 80009 | 386-5591-01 |
| | 386-5591-01 | 672-1319-00 | 672-1319-03 | PANEL,ROM:VM700A | 80009 | 386-5591-01 |
| | 386-5591-01 | 672-1346-00 | 672-1346-01 | PANEL,ROM:VM700A | 80009 | 386-5591-01 |
| | 386-5591-00 | | | PANEL,ROM: | 80009 | 386-5591-00 |
| | 211-0661-00 | | | SCR,ASSEM WSHR:4-40 X 0.25,PNH,STL,CD PL,PO Z,MACHINE (QUANTITY 4) | 01536 | 821-01655-024 |
| | 220-0098-00 | | | NUT BLOCK:4-40 THRU,ALUMINUM (QUANTITY 2) | 80009 | 220-0098-00 |
| | 337-3633-00 | 672-0283-00 | 672-0283-01 | SHIELD,ELEC:PROTECTIVE,PLASTIC | 80009 | 337-3633-00 |
| | 337-3633-00 | 672-1319-00 | 672-1319-03 | SHIELD,ELEC:PROTECTIVE,PLASTIC | 80009 | 337-3633-00 |
| | 337-3633-00 | 672-1346-00 | 672-1346-01 | SHIELD,ELEC:PROTECTIVE,PLASTIC | 80009 | 337-3633-00 |
| | 337-3671-00 | 671-1910-00 | | SHIELD,ELEC:CIRCUIT BOARD,POLYMIDE | 80009 | 337-3671-00 |
| | 346-0032-00 | 672-0283-00 | 672-0283-01 | STRAP,RETAINING:0.075 DIA X 4.0 L,MLD RBR (QUANTITY 4) | 98159 | 2829-75-4 |
| | 346-0032-00 | 672-1319-00 | 672-1319-03 | STRAP,RETAINING:0.075 DIA X 4.0 L,MLD RBR (QUANTITY 4) | 98159 | 2829-75-4 |
| | 346-0032-00 | 672-1346-00 | 672-1346-01 | STRAP,RETAINING:0.075 DIA X 4.0 L,MLD RBR (QUANTITY 4) | 98159 | 2829-75-4 |
| | 346-0032-00 | 671-1910-00 | | STRAP,RETAINING:0.075 DIA X 4.0 L,MLD RBR (QUANTITY 2) | 98159 | 2829-75-4 |
| | | | | *END ATTACHED PARTS* | | |
| A6BT134 | 146-0045-00 | | | BATTERY,DRY:3.4V,1.75AH,AA CELL | TK1320 | 15-51-04-410-000 |
| | | | | *ATTACHED PARTS* | | |
| | 343-0549-00 | | | STRAP,TIEDOWN,E:0.098 W X 4.0 L,ZYTEL (QUANTITY 2) | 06383 | PLT1M |
| | | | | *END ATTACHED PARTS* | | |
| A6C127 | 281-0775-01 | | | CAP,FXD,CER DI:0.1UF,20%,50V | 04222 | SA105E104MAA |
| A6C139 | 281-0775-01 | | | CAP,FXD,CER DI:0.1UF,20%,50V | 04222 | SA105E104MAA |
| A6C145 | 281-0775-01 | | | CAP,FXD,CER DI:0.1UF,20%,50V | 04222 | SA105E104MAA |
| A6C155 | 281-0775-01 | | | CAP,FXD,CER DI:0.1UF,20%,50V | 04222 | SA105E104MAA |
| A6C158 | 281-0814-00 | | | CAP,FXD,CER DI:100 PF,10%,100V | 80009 | 281-0814-00 |
| A6C159 | 281-0775-01 | 672-0283-00 | 672-0283-01 | CAP,FXD,CER DI:0.1UF,20%,50V | 04222 | SA105E104MAA |
| A6C159 | 281-0775-01 | 672-1319-00 | 672-1319-03 | CAP,FXD,CER DI:0.1UF,20%,50V | 04222 | SA105E104MAA |
| A6C159 | 281-0775-01 | 672-1346-00 | 672-1346-01 | CAP,FXD,CER DI:0.1UF,20%,50V | 04222 | SA105E104MAA |
| A6C166 | 281-0775-01 | 672-0283-00 | 672-0283-01 | CAP,FXD,CER DI:0.1UF,20%,50V | 04222 | SA105E104MAA |
| A6C166 | 281-0775-01 | 672-1319-00 | 672-1319-03 | CAP,FXD,CER DI:0.1UF,20%,50V | 04222 | SA105E104MAA |
| A6C166 | 281-0775-01 | 672-1346-00 | 672-1346-01 | CAP,FXD,CER DI:0.1UF,20%,50V | 04222 | SA105E104MAA |
| A6C175 | 281-0775-01 | | | CAP,FXD,CER DI:0.1UF,20%,50V | 04222 | SA105E104MAA |
| A6C177 | 281-0814-00 | | | CAP,FXD,CER DI:100 PF,10%,100V | 80009 | 281-0814-00 |
| A6C178 | 281-0775-01 | 672-0283-00 | 672-0283-01 | CAP,FXD,CER DI:0.1UF,20%,50V | 04222 | SA105E104MAA |
| A6C178 | 281-0775-01 | 672-1319-00 | 672-1319-03 | CAP,FXD,CER DI:0.1UF,20%,50V | 04222 | SA105E104MAA |
| A6C178 | 281-0775-01 | 672-1346-00 | 672-1346-01 | CAP,FXD,CER DI:0.1UF,20%,50V | 04222 | SA105E104MAA |
| A6C236 | 281-0775-01 | | | CAP,FXD,CER DI:0.1UF,20%,50V | 04222 | SA105E104MAA |

| Component No. | Tektronix Part No. | Serial/Assembly No. Effective | Dscont | Name & Description | Mfr. Code | Mfr. Part No. |
|---|---|---|---|---|---|---|
| A6C237 | 283-0190-00 | | | CAP,FXD,CER DI:0.47UF,5%,50V | 04222 | SR305C474JAA |
| A6C238 | 283-0486-00 | | | CAP,FXD,CER DI:1.0UF,10%,50V | 04222 | SR305C105KAA |
| A6C239 | 281-0812-00 | | | CAP,FXD,CER DI:1000PF,10%,100V | 04222 | SA101C102KAA |
| A6C246 | 281-0775-01 | | | CAP,FXD,CER DI:0.1UF,20%,50V | 04222 | SA105E104MAA |
| A6C255 | 281-0812-00 | | | CAP,FXD,CER DI:1000PF,10%,100V | 04222 | SA101C102KAA |
| A6C256 | 283-0486-00 | | | CAP,FXD,CER DI:1.0UF,10%,50V | 04222 | SR305C105KAA |
| A6C257 | 281-0775-01 | | | CAP,FXD,CER DI:0.1UF,20%,50V | 04222 | SA105E104MAA |
| A6C272 | 281-0775-01 | | | CAP,FXD,CER DI:0.1UF,20%,50V | 04222 | SA105E104MAA |
| A6C274 | 281-0775-01 | | | CAP,FXD,CER DI:0.1UF,20%,50V | 04222 | SA105E104MAA |
| A6C313 | 281-0775-01 | | | CAP,FXD,CER DI:0.1UF,20%,50V | 04222 | SA105E104MAA |
| A6C315 | 281-0775-01 | | | CAP,FXD,CER DI:0.1UF,20%,50V | 04222 | SA105E104MAA |
| A6C323 | 281-0775-01 | | | CAP,FXD,CER DI:0.1UF,20%,50V | 04222 | SA105E104MAA |
| A6C325 | 281-0775-01 | | | CAP,FXD,CER DI:0.1UF,20%,50V | 04222 | SA105E104MAA |
| A6C336 | 281-0775-01 | | | CAP,FXD,CER DI:0.1UF,20%,50V | 04222 | SA105E104MAA |
| A6C356 | 281-0775-01 | | | CAP,FXD,CER DI:0.1UF,20%,50V | 04222 | SA105E104MAA |
| A6C376 | 281-0775-01 | | | CAP,FXD,CER DI:0.1UF,20%,50V | 04222 | SA105E104MAA |
| A6C418 | 281-0775-01 | | | CAP,FXD,CER DI:0.1UF,20%,50V | 04222 | SA105E104MAA |
| A6C428 | 281-0775-01 | | | CAP,FXD,CER DI:0.1UF,20%,50V | 04222 | SA105E104MAA |
| A6C433 | 281-0775-01 | | | CAP,FXD,CER DI:0.1UF,20%,50V | 04222 | SA105E104MAA |
| A6C439 | 281-0775-01 | | | CAP,FXD,CER DI:0.1UF,20%,50V | 04222 | SA105E104MAA |
| A6C453 | 281-0775-01 | | | CAP,FXD,CER DI:0.1UF,20%,50V | 04222 | SA105E104MAA |
| A6C459 | 281-0775-01 | | | CAP,FXD,CER DI:0.1UF,20%,50V | 04222 | SA105E104MAA |
| A6C473 | 281-0775-01 | | | CAP,FXD,CER DI:0.1UF,20%,50V | 04222 | SA105E104MAA |
| A6C479 | 281-0775-01 | | | CAP,FXD,CER DI:0.1UF,20%,50V | 04222 | SA105E104MAA |
| A6C510 | 281-0775-01 | | | CAP,FXD,CER DI:0.1UF,20%,50V | 04222 | SA105E104MAA |
| A6C523 | 281-0775-01 | | | CAP,FXD,CER DI:0.1UF,20%,50V | 04222 | SA105E104MAA |
| A6C525 | 281-0775-01 | | | CAP,FXD,CER DI:0.1UF,20%,50V | 04222 | SA105E104MAA |
| A6C529 | 281-0775-01 | | | CAP,FXD,CER DI:0.1UF,20%,50V | 04222 | SA105E104MAA |
| A6C557 | 281-0775-01 | | | CAP,FXD,CER DI:0.1UF,20%,50V | 04222 | SA105E104MAA |
| A6C558 | 281-0775-01 | | | CAP,FXD,CER DI:0.1UF,20%,50V | 04222 | SA105E104MAA |
| A6C577 | 281-0775-01 | | | CAP,FXD,CER DI:0.1UF,20%,50V | 04222 | SA105E104MAA |
| A6C579 | 281-0775-01 | | | CAP,FXD,CER DI:0.1UF,20%,50V | 04222 | SA105E104MAA |
| A6C675 | 281-0775-01 | | | CAP,FXD,CER DI:0.1UF,20%,50V | 04222 | SA105E104MAA |
| A6C716 | 281-0775-01 | | | CAP,FXD,CER DI:0.1UF,20%,50V | 04222 | SA105E104MAA |
| A6C718 | 281-0775-01 | | | CAP,FXD,CER DI:0.1UF,20%,50V | 04222 | SA105E104MAA |
| A6C726 | 281-0775-01 | | | CAP,FXD,CER DI:0.1UF,20%,50V | 04222 | SA105E104MAA |
| A6C728 | 281-0775-01 | | | CAP,FXD,CER DI:0.1UF,20%,50V | 04222 | SA105E104MAA |
| A6C734 | 281-0775-01 | | | CAP,FXD,CER DI:0.1UF,20%,50V | 04222 | SA105E104MAA |
| A6C754 | 281-0775-01 | | | CAP,FXD,CER DI:0.1UF,20%,50V | 04222 | SA105E104MAA |
| A6C774 | 281-0775-01 | | | CAP,FXD,CER DI:0.1UF,20%,50V | 04222 | SA105E104MAA |
| A6C798 | 281-0775-01 | | | CAP,FXD,CER DI:0.1UF,20%,50V | 04222 | SA105E104MAA |
| A6C832 | 281-0775-01 | | | CAP,FXD,CER DI:0.1UF,20%,50V | 04222 | SA105E104MAA |
| A6C838 | 281-0775-01 | | | CAP,FXD,CER DI:0.1UF,20%,50V | 04222 | SA105E104MAA |
| A6C852 | 281-0775-01 | | | CAP,FXD,CER DI:0.1UF,20%,50V | 04222 | SA105E104MAA |
| A6C858 | 281-0775-01 | 672-0283-00 | 672-0283-01 | CAP,FXD,CER DI:0.1UF,20%,50V | 04222 | SA105E104MAA |
| A6C858 | 281-0775-01 | 672-1319-00 | 672-1319-03 | CAP,FXD,CER DI:0.1UF,20%,50V | 04222 | SA105E104MAA |
| A6C858 | 281-0775-01 | 672-1346-00 | 672-1346-01 | CAP,FXD,CER DI:0.1UF,20%,50V | 04222 | SA105E104MAA |
| A6C872 | 281-0775-01 | 672-0283-00 | 672-0283-01 | CAP,FXD,CER DI:0.1UF,20%,50V | 04222 | SA105E104MAA |
| A6C872 | 281-0775-01 | 672-1319-00 | 672-1319-03 | CAP,FXD,CER DI:0.1UF,20%,50V | 04222 | SA105E104MAA |
| A6C872 | 281-0775-01 | 672-1346-00 | 672-1346-01 | CAP,FXD,CER DI:0.1UF,20%,50V | 04222 | SA105E104MAA |
| A6C878 | 281-0775-01 | 672-0283-00 | 672-0283-01 | CAP,FXD,CER DI:0.1UF,20%,50V | 04222 | SA105E104MAA |
| A6C878 | 281-0775-01 | 672-1319-00 | 672-1319-03 | CAP,FXD,CER DI:0.1UF,20%,50V | 04222 | SA105E104MAA |
| A6C878 | 281-0775-01 | 672-1346-00 | 672-1346-01 | CAP,FXD,CER DI:0.1UF,20%,50V | 04222 | SA105E104MAA |
| A6C898 | 281-0775-01 | 672-0283-00 | 672-0283-01 | CAP,FXD,CER DI:0.1UF,20%,50V | 04222 | SA105E104MAA |
| A6C898 | 281-0775-01 | 672-1319-00 | 672-1319-03 | CAP,FXD,CER DI:0.1UF,20%,50V | 04222 | SA105E104MAA |
| A6C898 | 281-0775-01 | 672-1346-00 | 672-1346-01 | CAP,FXD,CER DI:0.1UF,20%,50V | 04222 | SA105E104MAA |
| A6C912 | 281-0775-01 | 672-0283-00 | 672-0283-01 | CAP,FXD,CER DI:0.1UF,20%,50V | 04222 | SA105E104MAA |
| A6C912 | 281-0775-01 | 672-1319-00 | 672-1319-03 | CAP,FXD,CER DI:0.1UF,20%,50V | 04222 | SA105E104MAA |
| A6C912 | 281-0775-01 | 672-1346-00 | 672-1346-01 | CAP,FXD,CER DI:0.1UF,20%,50V | 04222 | SA105E104MAA |

| Component No. | Tektronix Part No. | Serial/Assembly No. Effective | Dscont | Name & Description | Mfr. Code | Mfr. Part No. |
|---|---|---|---|---|---|---|
| A6C914 | 281-0775-01 | | | CAP,FXD,CER DI:0.1UF,20%,50V | 04222 | SA105E104MAA |
| A6C922 | 281-0775-01 | | | CAP,FXD,CER DI:0.1UF,20%,50V | 04222 | SA105E104MAA |
| A6C924 | 281-0775-01 | | | CAP,FXD,CER DI:0.1UF,20%,50V | 04222 | SA105E104MAA |
| A6C926 | 283-0194-00 | | | CAP,FXD,CER DI:4.7UF,20%,50V | 05397 | C350C475M5UICA |
| A6C934 | 281-0775-01 | | | CAP,FXD,CER DI:0.1UF,20%,50V | 04222 | SA105E104MAA |
| A6C938 | 290-0932-00 | | | CAP,FXD,ELCTLT:390UF,+100-10%,15VDC | 80009 | 290-0932-00 |
| A6C944 | 281-0812-00 | | | CAP,FXD,CER DI:1000PF,10%,100V | 04222 | SA101C102KAA |
| A6C955 | 281-0775-01 | | | CAP,FXD,CER DI:0.1UF,20%,50V | 04222 | SA105E104MAA |
| A6C958 | 281-0775-01 | | | CAP,FXD,CER DI:0.1UF,20%,50V | 04222 | SA105E104MAA |
| A6C968 | 281-0775-01 | | | CAP,FXD,CER DI:0.1UF,20%,50V | 04222 | SA105E104MAA |
| A6C974 | 281-0775-01 | | | CAP,FXD,CER DI:0.1UF,20%,50V | 04222 | SA105E104MAA |
| A6C984 | 281-0775-01 | | | CAP,FXD,CER DI:0.1UF,20%,50V | 04222 | SA105E104MAA |
| A6C999 | 281-0775-01 | | | CAP,FXD,CER DI:0.1UF,20%,50V | 04222 | SA105E104MAA |
| A6C1301 | 281-0775-01 | 671-1910-00 | | CAP,FXD,CER DI:0.1UF,20%,50V | 04222 | SA105E104MAA |
| A6C2301 | 281-0775-01 | 671-1910-00 | | CAP,FXD,CER DI:0.1UF,20%,50V | 04222 | SA105E104MAA |
| A6C2302 | 281-0775-01 | 671-1910-00 | | CAP,FXD,CER DI:0.1UF,20%,50V | 04222 | SA105E104MAA |
| A6C3301 | 281-0775-01 | 671-1910-00 | | CAP,FXD,CER DI:0.1UF,20%,50V | 04222 | SA105E104MAA |
| A6C3302 | 290-0950-00 | 671-1910-00 | | CAP,FXD,ELCTLT:100UF,+50-20%,50WVDC | 80009 | 290-0950-00 |
| A6C3303 | 281-0773-00 | 671-1910-00 | | CAP,FXD,CER DI:0.01UF,10%,100V | 80009 | 281-0773-00 |
| A6C3304 | 281-0775-01 | 671-1910-00 | | CAP,FXD,CER DI:0.1UF,20%,50V | 04222 | SA105E104MAA |
| A6C3305 | 281-0775-01 | 671-1910-00 | | CAP,FXD,CER DI:0.1UF,20%,50V | 04222 | SA105E104MAA |
| A6C3306 | 281-0775-01 | 671-1910-00 | | CAP,FXD,CER DI:0.1UF,20%,50V | 04222 | SA105E104MAA |
| A6C3307 | 281-0775-01 | 671-1910-00 | | CAP,FXD,CER DI:0.1UF,20%,50V | 04222 | SA105E104MAA |
| A6C3308 | 281-0775-01 | 671-1910-00 | | CAP,FXD,CER DI:0.1UF,20%,50V | 04222 | SA105E104MAA |
| A6C3309 | 281-0775-01 | 671-1910-00 | | CAP,FXD,CER DI:0.1UF,20%,50V | 04222 | SA105E104MAA |
| A6C3310 | 281-0775-01 | 671-1910-00 | | CAP,FXD,CER DI:0.1UF,20%,50V | 04222 | SA105E104MAA |
| A6C3311 | 281-0775-01 | 671-1910-00 | | CAP,FXD,CER DI:0.1UF,20%,50V | 04222 | SA105E104MAA |
| A6C4301 | 281-0775-01 | 671-1910-00 | | CAP,FXD,CER DI:0.1UF,20%,50V | 04222 | SA105E104MAA |
| A6C4302 | 281-0775-01 | 671-1910-00 | | CAP,FXD,CER DI:0.1UF,20%,50V | 04222 | SA105E104MAA |
| A6C4303 | 281-0775-01 | 671-1910-00 | | CAP,FXD,CER DI:0.1UF,20%,50V | 04222 | SA105E104MAA |
| A6C4304 | 281-0775-01 | 671-1910-00 | | CAP,FXD,CER DI:0.1UF,20%,50V | 04222 | SA105E104MAA |
| A6C4305 | 281-0775-01 | 671-1910-00 | | CAP,FXD,CER DI:0.1UF,20%,50V | 04222 | SA105E104MAA |
| A6C4306 | 281-0775-01 | 671-1910-00 | | CAP,FXD,CER DI:0.1UF,20%,50V | 04222 | SA105E104MAA |
| A6C4307 | 290-0782-00 | 671-1910-00 | | CAP,FXD,ELCTLT:4.7UF,+75-20%,35VDC | 55680 | UVX1V4R7MAA |
| A6C4308 | 281-0775-01 | 671-1910-00 | | CAP,FXD,CER DI:0.1UF,20%,50V | 04222 | SA105E104MAA |
| A6C4309 | 281-0775-01 | 671-1910-00 | | CAP,FXD,CER DI:0.1UF,20%,50V | 04222 | SA105E104MAA |
| A6C4310 | 281-0775-01 | 671-1910-00 | | CAP,FXD,CER DI:0.1UF,20%,50V | 04222 | SA105E104MAA |
| A6C4311 | 281-0775-01 | 671-1910-00 | | CAP,FXD,CER DI:0.1UF,20%,50V | 04222 | SA105E104MAA |
| A6C4312 | 281-0775-01 | 671-1910-00 | | CAP,FXD,CER DI:0.1UF,20%,50V | 04222 | SA105E104MAA |
| A6C4313 | 281-0775-01 | 671-1910-00 | | CAP,FXD,CER DI:0.1UF,20%,50V | 04222 | SA105E104MAA |
| A6C4314 | 290-0782-00 | 671-1910-00 | | CAP,FXD,ELCTLT:4.7UF,+75-20%,35VDC | 55680 | UVX1V4R7MAA |
| A6C4315 | 281-0775-01 | 671-1910-00 | | CAP,FXD,CER DI:0.1UF,20%,50V | 04222 | SA105E104MAA |
| A6C4316 | 281-0775-01 | 671-1910-00 | | CAP,FXD,CER DI:0.1UF,20%,50V | 04222 | SA105E104MAA |
| A6C4317 | 281-0775-01 | 671-1910-00 | | CAP,FXD,CER DI:0.1UF,20%,50V | 04222 | SA105E104MAA |
| A6C4318 | 281-0775-01 | 671-1910-00 | | CAP,FXD,CER DI:0.1UF,20%,50V | 04222 | SA105E104MAA |
| A6C4319 | 281-0775-01 | 671-1910-00 | | CAP,FXD,CER DI:0.1UF,20%,50V | 04222 | SA105E104MAA |
| A6C4320 | 281-0775-01 | 671-1910-00 | | CAP,FXD,CER DI:0.1UF,20%,50V | 04222 | SA105E104MAA |
| A6C4321 | 290-0782-00 | 671-1910-00 | | CAP,FXD,ELCTLT:4.7UF,+75-20%,35VDC | 55680 | UVX1V4R7MAA |
| A6C4322 | 281-0775-01 | 671-1910-00 | | CAP,FXD,CER DI:0.1UF,20%,50V | 04222 | SA105E104MAA |
| A6C4323 | 281-0775-01 | 671-1910-00 | | CAP,FXD,CER DI:0.1UF,20%,50V | 04222 | SA105E104MAA |
| A6C4324 | 281-0775-01 | 671-1910-00 | | CAP,FXD,CER DI:0.1UF,20%,50V | 04222 | SA105E104MAA |
| A6C4325 | 281-0775-01 | 671-1910-00 | | CAP,FXD,CER DI:0.1UF,20%,50V | 04222 | SA105E104MAA |
| A6C4326 | 281-0775-01 | 671-1910-00 | | CAP,FXD,CER DI:0.1UF,20%,50V | 04222 | SA105E104MAA |
| A6C4327 | 281-0775-01 | 671-1910-00 | | CAP,FXD,CER DI:0.1UF,20%,50V | 04222 | SA105E104MAA |
| A6C4328 | 290-0782-00 | 671-1910-00 | | CAP,FXD,ELCTLT:4.7UF,+75-20%,35VDC | 55680 | UVX1V4R7MAA |
| A6C5301 | 281-0775-01 | 671-1910-00 | | CAP,FXD,CER DI:0.1UF,20%,50V | 04222 | SA105E104MAA |
| A6CR974 | 152-0322-00 | 672-0283-00 | 672-0283-01 | DIODE,SIG:SCHTKY,;15V,410MVF AT 1MA,1.2PF;5 082-2811,T&R | 80009 | 152-0322-00 |

| Component No. | Tektronix Part No. | Serial/Assembly No. Effective | Dscont | Name & Description | Mfr. Code | Mfr. Part No. |
|---|---|---|---|---|---|---|
| A6CR974 | 152-0322-00 | 672-1319-00 | 672-1319-03 | DIODE,SIG:SCHTKY,;15V,410MVF AT 1MA,1.2PF;5082-2811,T&R | 80009 | 152-0322-00 |
| A6CR974 | 152-0322-00 | 672-1346-00 | 672-1346-01 | DIODE,SIG:SCHTKY,;15V,410MVF AT 1MA,1.2PF;5082-2811,T&R | 80009 | 152-0322-00 |
| A6CR974 | 152-0141-02 | 671-1910-00 | | DIODE,SIG:,ULTRA FAST;40V,150MA,4NS,2PF;1N4152,DO-35,T&R | 80009 | 152-0141-02 |
| A6CR975 | 152-0322-00 | | | DIODE,SIG:SCHTKY,;15V,410MVF AT 1MA,1.2PF;5082-2811,T&R | 80009 | 152-0322-00 |
| A6CR976 | 152-0322-00 | | | DIODE,SIG:SCHTKY,;15V,410MVF AT 1MA,1.2PF;5082-2811,T&R | 80009 | 152-0322-00 |
| A6CR977 | 152-0322-00 | | | DIODE,SIG:SCHTKY,;15V,410MVF AT 1MA,1.2PF;5082-2811,T&R | 80009 | 152-0322-00 |
| A6CR978 | 152-0322-00 | | | DIODE,SIG:SCHTKY,;15V,410MVF AT 1MA,1.2PF;5082-2811,T&R | 80009 | 152-0322-00 |
| A6CR5501 | 152-0141-02 | 671-1910-00 | | DIODE,SIG:,ULTRA FAST;40V,150MA,4NS,2PF;1N4152,DO-35,T&R | 80009 | 152-0141-02 |
| A6DS3401 | 150-1120-00 | 671-1910-00 | | DIODE,OPTO:,LED;AMBER,583NM,8MCD AT 20MA,T1 3/4 IN RIGHT ANGLE HOUSING;PCL200-BA | 15513 | PCL200-BA |
| A6F298 | 159-0193-00 | | | FUSE,WIRE LEAD:10A,125V,5 SEC | 61857 | SP5-10A |
| A6J495 | 131-3517-00 | | | CONN,DIN:PCB,;FEMALE,RTANG,3 X 50,0.1 CTR,0.504 MLG X 0.118 TAIL,30 GOLD;,, | 80009 | 131-3517-00 |
| | | | | *MOUNTING PARTS* | | |
| | 210-0001-00 | | | WASHER,LOCK:#2 INTL,0.013 THK,STL (QUANTITY 2) | 77900 | 1202-00-00-0541C |
| | 210-0405-00 | | | NUT,PLAIN,HEX:2-56 X 0.188,BRS CD PL (QUANTITY 2) | 73743 | 12157-50 |
| | 211-0185-00 | | | SCREW,MACHINE:2-56 X 0.438,PNH,STL (QUANTITY 2) | TK0435 | ORDER BY DESCR |
| | | | | *END MOUNTING PARTS* | | |
| A6Q3101 | 151-0424-00 | 671-1910-00 | | TRANSISTOR,SIG:BIPOLAR,NPN;15V,500MA,SWITCHING;MPS2369A,TO-92 EBC | 80009 | 151-0424-00 |
| A6Q3102 | 151-0424-00 | 671-1910-00 | | TRANSISTOR,SIG:BIPOLAR,NPN;15V,500MA,SWITCHING;MPS2369A,TO-92 EBC | 80009 | 151-0424-00 |
| A6Q3103 | 151-1229-00 | 671-1910-00 | | TRANSISTOR,PWR:MOS,P-CH;60V,12A,0.3 OHM;MTD2955-1,TO-251/DPAK W/LEADS | 80009 | 151-1229-00 |
| A6Q3104 | 151-1230-00 | 671-1910-00 | | TRANSISTOR,PWR:MOS,N-CH;50V,10A,0.1 OHM;MTD10N05E-1,TO-251/DPAK W/LEADS | 80009 | 151-1230-00 |
| A6Q3105 | 151-0327-00 | 671-1910-00 | | TRANSISTOR,SIG:BIPOLAR,PNP;12V,80MA,SWITCHING;PN4258,TO-92 EBC | 07263 | S042810 |
| A6R117 | 307-0677-00 | 672-0283-00 | 672-0283-01 | RES NTWK,FXD,FI:4,56 OHM,2%,0.2W | 80009 | 307-0677-00 |
| A6R117 | 307-0677-00 | 672-1319-00 | 672-1319-03 | RES NTWK,FXD,FI:4,56 OHM,2%,0.2W | 80009 | 307-0677-00 |
| A6R117 | 307-0677-00 | 672-1346-00 | 672-1346-01 | RES NTWK,FXD,FI:4,56 OHM,2%,0.2W | 80009 | 307-0677-00 |
| A6R117 | 307-0717-00 | 671-1910-00 | | RES NTWK,FXD,FI:4,100 OHM,2%,0.3W EACH | 80009 | 307-0717-00 |
| A6R118 | 315-0101-00 | 672-0283-00 | 672-0283-01 | RES,FXD,FILM:100 OHM,5%,0.25W | 80009 | 315-0101-00 |
| A6R118 | 315-0101-00 | 672-1319-00 | 672-1319-03 | RES,FXD,FILM:100 OHM,5%,0.25W | 80009 | 315-0101-00 |
| A6R118 | 315-0101-00 | 672-1346-00 | 672-1346-01 | RES,FXD,FILM:100 OHM,5%,0.25W | 80009 | 315-0101-00 |
| A6R118 | 307-0717-00 | 671-1910-00 | | RES NTWK,FXD,FI:4,100 OHM,2%,0.3W EACH | 80009 | 307-0717-00 |
| A6R119 | 307-0677-00 | 672-0283-00 | 672-0283-01 | RES NTWK,FXD,FI:4,56 OHM,2%,0.2W | 80009 | 307-0677-00 |
| A6R119 | 307-0677-00 | 672-1319-00 | 672-1319-03 | RES NTWK,FXD,FI:4,56 OHM,2%,0.2W | 80009 | 307-0677-00 |
| A6R119 | 307-0677-00 | 672-1346-00 | 672-1346-01 | RES NTWK,FXD,FI:4,56 OHM,2%,0.2W | 80009 | 307-0677-00 |
| A6R119 | 307-0717-00 | 671-1910-00 | | RES NTWK,FXD,FI:4,100 OHM,2%,0.3W EACH | 80009 | 307-0717-00 |
| A6R126 | 315-0102-00 | 672-0283-00 | 672-0283-01 | RES,FXD,FILM:1K OHM,5%,0.25W | 80009 | 315-0102-00 |
| A6R126 | 315-0102-00 | 672-1319-00 | 672-1319-03 | RES,FXD,FILM:1K OHM,5%,0.25W | 80009 | 315-0102-00 |
| A6R126 | 315-0102-00 | 672-1346-00 | 672-1346-01 | RES,FXD,FILM:1K OHM,5%,0.25W | 80009 | 315-0102-00 |
| A6R126 | 322-3193-00 | 671-1910-00 | | RES,FXD:METAL FILM;1K OHM,1%,0.2W,TC=100 PPM;AXIAL,T&R,SMALL BODY | 57668 | CRB20 FXE 1K00 |
| A6R157 | 315-0102-00 | 672-0283-00 | 672-0283-01 | RES,FXD,FILM:1K OHM,5%,0.25W | 80009 | 315-0102-00 |
| A6R157 | 315-0102-00 | 672-1319-00 | 672-1319-03 | RES,FXD,FILM:1K OHM,5%,0.25W | 80009 | 315-0102-00 |
| A6R157 | 315-0102-00 | 672-1346-00 | 672-1346-01 | RES,FXD,FILM:1K OHM,5%,0.25W | 80009 | 315-0102-00 |

| Component No. | Tektronix Part No. | Serial/Assembly No. Effective | Dscont | Name & Description | Mfr. Code | Mfr. Part No. |
|---|---|---|---|---|---|---|
| A6R157 | 322-3193-00 | 671-1910-00 | | RES,FXD:METAL FILM;1K OHM,1%,0.2W,TC=100 PPM;AXIAL,T&R,SMALL BODY | 57668 | CRB20 FXE 1K00 |
| A6R158 | 315-0102-00 | 672-0283-00 | 672-0283-01 | RES,FXD,FILM:1K OHM,5%,0.25W | 80009 | 315-0102-00 |
| A6R158 | 315-0102-00 | 672-1319-00 | 672-1319-03 | RES,FXD,FILM:1K OHM,5%,0.25W | 80009 | 315-0102-00 |
| A6R158 | 315-0102-00 | 672-1346-00 | 672-1346-01 | RES,FXD,FILM:1K OHM,5%,0.25W | 80009 | 315-0102-00 |
| A6R168 | 315-0472-00 | 672-0283-00 | 672-0283-01 | RES,FXD,FILM:4.7K OHM,5%,0.25W | 80009 | 315-0472-00 |
| A6R168 | 315-0472-00 | 672-1319-00 | 672-1319-03 | RES,FXD,FILM:4.7K OHM,5%,0.25W | 80009 | 315-0472-00 |
| A6R168 | 315-0472-00 | 672-1346-00 | 672-1346-01 | RES,FXD,FILM:4.7K OHM,5%,0.25W | 80009 | 315-0472-00 |
| A6R168 | 322-3258-00 | 671-1910-00 | | RES,FXD:METAL FILM;4.75K OHM,1%,0.2W,TC=100 PPM;AXIAL,T&R,SMALL BODY | 80009 | 322-3258-00 |
| A6R169 | 315-0221-00 | 672-0283-00 | 672-0283-01 | RES,FXD,FILM:220 OHM,5%,0.25W | 80009 | 315-0221-00 |
| A6R169 | 315-0221-00 | 672-1319-00 | 672-1319-03 | RES,FXD,FILM:220 OHM,5%,0.25W | 80009 | 315-0221-00 |
| A6R169 | 315-0221-00 | 672-1346-00 | 672-1346-01 | RES,FXD,FILM:220 OHM,5%,0.25W | 80009 | 315-0221-00 |
| A6R169 | 322-3114-00 | 671-1910-00 | | RES,FXD:METAL FILM;150 OHM,1%,0.2W,TC=100 PPM;AXIAL,T&R,SMALL BODY | 91637 | CCF50-2-G1500F |
| A6R176 | 315-0221-00 | 672-0283-00 | 672-0283-01 | RES,FXD,FILM:220 OHM,5%,0.25W | 80009 | 315-0221-00 |
| A6R176 | 315-0221-00 | 672-1319-00 | 672-1319-03 | RES,FXD,FILM:220 OHM,5%,0.25W | 80009 | 315-0221-00 |
| A6R176 | 315-0221-00 | 672-1346-00 | 672-1346-01 | RES,FXD,FILM:220 OHM,5%,0.25W | 80009 | 315-0221-00 |
| A6R176 | 322-3114-00 | 671-1910-00 | | RES,FXD:METAL FILM;150 OHM,1%,0.2W,TC=100 PPM;AXIAL,T&R,SMALL BODY | 91637 | CCF50-2-G1500F |
| A6R178 | 317-0102-00 | 672-0283-00 | 672-0283-01 | RES,FXD,CMPSN:1K OHM,5%,0125W | 80009 | 317-0102-00 |
| A6R178 | 317-0102-00 | 672-1319-00 | 672-1319-03 | RES,FXD,CMPSN:1K OHM,5%,0125W | 80009 | 317-0102-00 |
| A6R178 | 317-0102-00 | 672-1346-00 | 672-1346-01 | RES,FXD,CMPSN:1K OHM,5%,0125W | 80009 | 317-0102-00 |
| A6R179 | 307-0741-00 | | | RES NTWK,FXD,FI:7,3.3K OHM,2%,0.19W EACH | 80009 | 307-0741-00 |
| A6R235 | 315-0101-00 | 672-0283-00 | 672-0283-01 | RES,FXD,FILM:100 OHM,5%,0.25W | 80009 | 315-0101-00 |
| A6R235 | 315-0101-00 | 672-1319-00 | 672-1319-03 | RES,FXD,FILM:100 OHM,5%,0.25W | 80009 | 315-0101-00 |
| A6R235 | 315-0101-00 | 672-1346-00 | 672-1346-01 | RES,FXD,FILM:100 OHM,5%,0.25W | 80009 | 315-0101-00 |
| A6R235 | 307-0717-00 | 671-1910-00 | | RES NTWK,FXD,FI:4,100 OHM,2%,0.3W EACH | 80009 | 307-0717-00 |
| A6R247 | 315-0560-00 | 672-0283-00 | 672-0283-01 | RES,FXD,FILM:56 OHM,5%,0.25W | 80009 | 315-0560-00 |
| A6R247 | 315-0560-00 | 672-1319-00 | 672-1319-03 | RES,FXD,FILM:56 OHM,5%,0.25W | 80009 | 315-0560-00 |
| A6R247 | 315-0560-00 | 672-1346-00 | 672-1346-01 | RES,FXD,FILM:56 OHM,5%,0.25W | 80009 | 315-0560-00 |
| A6R248 | 315-0560-00 | 672-0283-00 | 672-0283-01 | RES,FXD,FILM:56 OHM,5%,0.25W | 80009 | 315-0560-00 |
| A6R248 | 315-0560-00 | 672-1319-00 | 672-1319-03 | RES,FXD,FILM:56 OHM,5%,0.25W | 80009 | 315-0560-00 |
| A6R248 | 315-0560-00 | 672-1346-00 | 672-1346-01 | RES,FXD,FILM:56 OHM,5%,0.25W | 80009 | 315-0560-00 |
| A6R249 | 315-0560-00 | 672-0283-00 | 672-0283-01 | RES,FXD,FILM:56 OHM,5%,0.25W | 80009 | 315-0560-00 |
| A6R249 | 315-0560-00 | 672-1319-00 | 672-1319-03 | RES,FXD,FILM:56 OHM,5%,0.25W | 80009 | 315-0560-00 |
| A6R249 | 315-0560-00 | 672-1346-00 | 672-1346-01 | RES,FXD,FILM:56 OHM,5%,0.25W | 80009 | 315-0560-00 |
| A6R258 | 315-0560-00 | 672-0283-00 | 672-0283-01 | RES,FXD,FILM:56 OHM,5%,0.25W | 80009 | 315-0560-00 |
| A6R258 | 315-0560-00 | 672-1319-00 | 672-1319-03 | RES,FXD,FILM:56 OHM,5%,0.25W | 80009 | 315-0560-00 |
| A6R258 | 315-0560-00 | 672-1346-00 | 672-1346-01 | RES,FXD,FILM:56 OHM,5%,0.25W | 80009 | 315-0560-00 |
| A6R258 | 322-3073-00 | 671-1910-00 | | RES,FXD:METAL FILM;56.2 OHM,1%,0.2W,TC=100 PPM;AXIAL,T&R,SMALL BODY | 80009 | 322-3073-00 |
| A6R259 | 315-0560-00 | 672-0283-00 | 672-0283-01 | RES,FXD,FILM:56 OHM,5%,0.25W | 80009 | 315-0560-00 |
| A6R259 | 315-0560-00 | 672-1319-00 | 672-1319-03 | RES,FXD,FILM:56 OHM,5%,0.25W | 80009 | 315-0560-00 |
| A6R259 | 315-0560-00 | 672-1346-00 | 672-1346-01 | RES,FXD,FILM:56 OHM,5%,0.25W | 80009 | 315-0560-00 |
| A6R259 | 322-3073-00 | 671-1910-00 | | RES,FXD:METAL FILM;56.2 OHM,1%,0.2W,TC=100 PPM;AXIAL,T&R,SMALL BODY | 80009 | 322-3073-00 |
| A6R265 | 315-0472-00 | 672-0283-00 | 672-0283-01 | RES,FXD,FILM:4.7K OHM,5%,0.25W | 80009 | 315-0472-00 |
| A6R265 | 315-0472-00 | 672-1319-00 | 672-1319-03 | RES,FXD,FILM:4.7K OHM,5%,0.25W | 80009 | 315-0472-00 |
| A6R265 | 315-0472-00 | 672-1346-00 | 672-1346-01 | RES,FXD,FILM:4.7K OHM,5%,0.25W | 80009 | 315-0472-00 |
| A6R265 | 322-3258-00 | 671-1910-00 | | RES,FXD:METAL FILM;4.75K OHM,1%,0.2W,TC=100 PPM;AXIAL,T&R,SMALL BODY | 80009 | 322-3258-00 |
| A6R268 | 307-0677-00 | | | RES NTWK,FXD,FI:4,56 OHM,2%,0.2W | 80009 | 307-0677-00 |
| A6R278 | 307-1174-00 | | | RES NTWK,FXD,FI:3.3K OHM,2% | 80009 | 307-1174-00 |
| A6R292 | 315-0100-00 | 672-0283-00 | 672-0283-01 | RES,FXD,FILM:10 OHM,5%,0.25W | 19701 | 5043CX10RR00J |
| A6R292 | 315-0100-00 | 672-1319-00 | 672-1319-03 | RES,FXD,FILM:10 OHM,5%,0.25W | 19701 | 5043CX10RR00J |
| A6R292 | 315-0100-00 | 672-1346-00 | 672-1346-01 | RES,FXD,FILM:10 OHM,5%,0.25W | 19701 | 5043CX10RR00J |
| A6R292 | 307-0841-00 | 671-1910-00 | | RES NTWK,FXD,FI:(4)10 OHM,10%,0.3W | 91637 | CSC08A-03-100G |
| A6R293 | 315-0100-00 | 672-0283-00 | 672-0283-01 | RES,FXD,FILM:10 OHM,5%,0.25W | 19701 | 5043CX10RR00J |
| A6R293 | 315-0100-00 | 672-1319-00 | 672-1319-03 | RES,FXD,FILM:10 OHM,5%,0.25W | 19701 | 5043CX10RR00J |
| A6R293 | 315-0100-00 | 672-1346-00 | 672-1346-01 | RES,FXD,FILM:10 OHM,5%,0.25W | 19701 | 5043CX10RR00J |

| Component No. | Tektronix Part No. | Serial/Assembly No. Effective | Dscont | Name & Description | Mfr. Code | Mfr. Part No. |
|---|---|---|---|---|---|---|
| A6R294 | 315-0100-00 | 672-0283-00 | 672-0283-01 | RES,FXD,FILM:10 OHM,5%,0.25W | 19701 | 5043CX10RR00J |
| A6R294 | 315-0100-00 | 672-1319-00 | 672-1319-03 | RES,FXD,FILM:10 OHM,5%,0.25W | 19701 | 5043CX10RR00J |
| A6R294 | 315-0100-00 | 672-1346-00 | 672-1346-01 | RES,FXD,FILM:10 OHM,5%,0.25W | 19701 | 5043CX10RR00J |
| A6R515 | 307-0717-00 | | | RES NTWK,FXD,FI:4,100 OHM,2%,0.3W EACH | 80009 | 307-0717-00 |
| A6R517 | 307-0717-00 | | | RES NTWK,FXD,FI:4,100 OHM,2%,0.3W EACH | 80009 | 307-0717-00 |
| A6R519 | 307-0717-00 | | | RES NTWK,FXD,FI:4,100 OHM,2%,0.3W EACH | 80009 | 307-0717-00 |
| A6R523 | 315-0101-00 | 672-0283-00 | 672-0283-01 | RES,FXD,FILM:100 OHM,5%,0.25W | 80009 | 315-0101-00 |
| A6R523 | 315-0101-00 | 672-1319-00 | 672-1319-03 | RES,FXD,FILM:100 OHM,5%,0.25W | 80009 | 315-0101-00 |
| A6R523 | 315-0101-00 | 672-1346-00 | 672-1346-01 | RES,FXD,FILM:100 OHM,5%,0.25W | 80009 | 315-0101-00 |
| A6R523 | 322-3097-00 | 671-1910-00 | | RES,FXD:METAL FILM;100 OHM,1%,0.2W,TC=100 PPM;AXIAL,T&R,SMALL BODY | 57668 | CRB20 FXE 100E |
| A6R524 | 315-0101-00 | 672-0283-00 | 672-0283-01 | RES,FXD,FILM:100 OHM,5%,0.25W | 80009 | 315-0101-00 |
| A6R524 | 315-0101-00 | 672-1319-00 | 672-1319-03 | RES,FXD,FILM:100 OHM,5%,0.25W | 80009 | 315-0101-00 |
| A6R524 | 315-0101-00 | 672-1346-00 | 672-1346-01 | RES,FXD,FILM:100 OHM,5%,0.25W | 80009 | 315-0101-00 |
| A6R524 | 322-3097-00 | 671-1910-00 | | RES,FXD:METAL FILM;100 OHM,1%,0.2W,TC=100 PPM;AXIAL,T&R,SMALL BODY | 57668 | CRB20 FXE 100E |
| A6R526 | 315-0102-00 | 672-0283-00 | 672-0283-01 | RES,FXD,FILM:1K OHM,5%,0.25W | 80009 | 315-0102-00 |
| A6R526 | 315-0102-00 | 672-1319-00 | 672-1319-03 | RES,FXD,FILM:1K OHM,5%,0.25W | 80009 | 315-0102-00 |
| A6R526 | 315-0102-00 | 672-1346-00 | 672-1346-01 | RES,FXD,FILM:1K OHM,5%,0.25W | 80009 | 315-0102-00 |
| A6R568 | 307-0677-00 | 672-0283-00 | 672-0283-01 | RES NTWK,FXD,FI:4,56 OHM,2%,0.2W | 80009 | 307-0677-00 |
| A6R568 | 307-0677-00 | 672-1319-00 | 672-1319-03 | RES NTWK,FXD,FI:4,56 OHM,2%,0.2W | 80009 | 307-0677-00 |
| A6R568 | 307-0677-00 | 672-1346-00 | 672-1346-01 | RES NTWK,FXD,FI:4,56 OHM,2%,0.2W | 80009 | 307-0677-00 |
| A6R568 | 307-0717-00 | 671-1910-00 | | RES NTWK,FXD,FI:4,100 OHM,2%,0.3W EACH | 80009 | 307-0717-00 |
| A6R613 | 307-0717-00 | | | RES NTWK,FXD,FI:4,100 OHM,2%,0.3W EACH | 80009 | 307-0717-00 |
| A6R633 | 307-0677-00 | 672-0283-00 | 672-0283-01 | RES NTWK,FXD,FI:4,56 OHM,2%,0.2W | 80009 | 307-0677-00 |
| A6R633 | 307-0677-00 | 672-1319-00 | 672-1319-03 | RES NTWK,FXD,FI:4,56 OHM,2%,0.2W | 80009 | 307-0677-00 |
| A6R633 | 307-0677-00 | 672-1346-00 | 672-1346-01 | RES NTWK,FXD,FI:4,56 OHM,2%,0.2W | 80009 | 307-0677-00 |
| A6R633 | 307-0717-00 | 671-1910-00 | | RES NTWK,FXD,FI:4,100 OHM,2%,0.3W EACH | 80009 | 307-0717-00 |
| A6R635 | 307-0717-00 | 671-1910-00 | | RES NTWK,FXD,FI:4,100 OHM,2%,0.3W EACH | 80009 | 307-0717-00 |
| A6R635 | 307-0677-00 | 672-0283-00 | 672-0283-01 | RES NTWK,FXD,FI:4,56 OHM,2%,0.2W | 80009 | 307-0677-00 |
| A6R635 | 307-0677-00 | 672-1319-00 | 672-1319-03 | RES NTWK,FXD,FI:4,56 OHM,2%,0.2W | 80009 | 307-0677-00 |
| A6R635 | 307-0677-00 | 672-1346-00 | 672-1346-01 | RES NTWK,FXD,FI:4,56 OHM,2%,0.2W | 80009 | 307-0677-00 |
| A6R637 | 307-0677-00 | 672-0283-00 | 672-0283-01 | RES NTWK,FXD,FI:4,56 OHM,2%,0.2W | 80009 | 307-0677-00 |
| A6R637 | 307-0677-00 | 672-1319-00 | 672-1319-03 | RES NTWK,FXD,FI:4,56 OHM,2%,0.2W | 80009 | 307-0677-00 |
| A6R637 | 307-0677-00 | 672-1346-00 | 672-1346-01 | RES NTWK,FXD,FI:4,56 OHM,2%,0.2W | 80009 | 307-0677-00 |
| A6R637 | 307-0717-00 | 671-1910-00 | | RES NTWK,FXD,FI:4,100 OHM,2%,0.3W EACH | 80009 | 307-0717-00 |
| A6R643 | 307-0677-00 | 672-0283-00 | 672-0283-01 | RES NTWK,FXD,FI:4,56 OHM,2%,0.2W | 80009 | 307-0677-00 |
| A6R643 | 307-0677-00 | 672-1319-00 | 672-1319-03 | RES NTWK,FXD,FI:4,56 OHM,2%,0.2W | 80009 | 307-0677-00 |
| A6R643 | 307-0677-00 | 672-1346-00 | 672-1346-01 | RES NTWK,FXD,FI:4,56 OHM,2%,0.2W | 80009 | 307-0677-00 |
| A6R643 | 307-0717-00 | 671-1910-00 | | RES NTWK,FXD,FI:4,100 OHM,2%,0.3W EACH | 80009 | 307-0717-00 |
| A6R645 | 307-0677-00 | 672-0283-00 | 672-0283-01 | RES NTWK,FXD,FI:4,56 OHM,2%,0.2W | 80009 | 307-0677-00 |
| A6R645 | 307-0677-00 | 672-1319-00 | 672-1319-03 | RES NTWK,FXD,FI:4,56 OHM,2%,0.2W | 80009 | 307-0677-00 |
| A6R645 | 307-0677-00 | 672-1346-00 | 672-1346-01 | RES NTWK,FXD,FI:4,56 OHM,2%,0.2W | 80009 | 307-0677-00 |
| A6R645 | 307-0717-00 | 671-1910-00 | | RES NTWK,FXD,FI:4,100 OHM,2%,0.3W EACH | 80009 | 307-0717-00 |
| A6R647 | 307-0677-00 | 672-0283-00 | 672-0283-01 | RES NTWK,FXD,FI:4,56 OHM,2%,0.2W | 80009 | 307-0677-00 |
| A6R647 | 307-0677-00 | 672-1319-00 | 672-1319-03 | RES NTWK,FXD,FI:4,56 OHM,2%,0.2W | 80009 | 307-0677-00 |
| A6R647 | 307-0677-00 | 672-1346-00 | 672-1346-01 | RES NTWK,FXD,FI:4,56 OHM,2%,0.2W | 80009 | 307-0677-00 |
| A6R647 | 307-0717-00 | 671-1910-00 | | RES NTWK,FXD,FI:4,100 OHM,2%,0.3W EACH | 80009 | 307-0717-00 |
| A6R653 | 307-0677-00 | 672-0283-00 | 672-0283-01 | RES NTWK,FXD,FI:4,56 OHM,2%,0.2W | 80009 | 307-0677-00 |
| A6R653 | 307-0677-00 | 672-1319-00 | 672-1319-03 | RES NTWK,FXD,FI:4,56 OHM,2%,0.2W | 80009 | 307-0677-00 |
| A6R653 | 307-0677-00 | 672-1346-00 | 672-1346-01 | RES NTWK,FXD,FI:4,56 OHM,2%,0.2W | 80009 | 307-0677-00 |
| A6R653 | 307-0717-00 | 671-1910-00 | | RES NTWK,FXD,FI:4,100 OHM,2%,0.3W EACH | 80009 | 307-0717-00 |
| A6R655 | 307-0677-00 | 672-0283-00 | 672-0283-01 | RES NTWK,FXD,FI:4,56 OHM,2%,0.2W | 80009 | 307-0677-00 |
| A6R655 | 307-0677-00 | 672-1319-00 | 672-1319-03 | RES NTWK,FXD,FI:4,56 OHM,2%,0.2W | 80009 | 307-0677-00 |
| A6R655 | 307-0677-00 | 672-1346-00 | 672-1346-01 | RES NTWK,FXD,FI:4,56 OHM,2%,0.2W | 80009 | 307-0677-00 |
| A6R655 | 307-0717-00 | 671-1910-00 | | RES NTWK,FXD,FI:4,100 OHM,2%,0.3W EACH | 80009 | 307-0717-00 |
| A6R657 | 307-0677-00 | 672-0283-00 | 672-0283-01 | RES NTWK,FXD,FI:4,56 OHM,2%,0.2W | 80009 | 307-0677-00 |
| A6R657 | 307-0677-00 | 672-1319-00 | 672-1319-03 | RES NTWK,FXD,FI:4,56 OHM,2%,0.2W | 80009 | 307-0677-00 |
| A6R657 | 307-0677-00 | 672-1346-00 | 672-1346-01 | RES NTWK,FXD,FI:4,56 OHM,2%,0.2W | 80009 | 307-0677-00 |
| A6R657 | 307-0717-00 | 671-1910-00 | | RES NTWK,FXD,FI:4,100 OHM,2%,0.3W EACH | 80009 | 307-0717-00 |
| A6R661 | 307-0677-00 | 672-0283-00 | 672-0283-01 | RES NTWK,FXD,FI:4,56 OHM,2%,0.2W | 80009 | 307-0677-00 |

| Component No. | Tektronix Part No. | Serial/Assembly No. Effective | Dscont | Name & Description | Mfr. Code | Mfr. Part No. |
|---|---|---|---|---|---|---|
| A6R661 | 307-0677-00 | 672-1319-00 | 672-1319-03 | RES NTWK,FXD,FI:4,56 OHM,2%,0.2W | 80009 | 307-0677-00 |
| A6R661 | 307-0677-00 | 672-1346-00 | 672-1346-01 | RES NTWK,FXD,FI:4,56 OHM,2%,0.2W | 80009 | 307-0677-00 |
| A6R661 | 307-0717-00 | 671-1910-00 | | RES NTWK,FXD,FI:4,100 OHM,2%,0.3W EACH | 80009 | 307-0717-00 |
| A6R663 | 307-0677-00 | 672-0283-00 | 672-0283-01 | RES NTWK,FXD,FI:4,56 OHM,2%,0.2W | 80009 | 307-0677-00 |
| A6R663 | 307-0677-00 | 672-1319-00 | 672-1319-03 | RES NTWK,FXD,FI:4,56 OHM,2%,0.2W | 80009 | 307-0677-00 |
| A6R663 | 307-0677-00 | 672-1346-00 | 672-1346-01 | RES NTWK,FXD,FI:4,56 OHM,2%,0.2W | 80009 | 307-0677-00 |
| A6R663 | 307-0717-00 | 671-1910-00 | | RES NTWK,FXD,FI:4,100 OHM,2%,0.3W EACH | 80009 | 307-0717-00 |
| A6R665 | 307-0677-00 | 672-0283-00 | 672-0283-01 | RES NTWK,FXD,FI:4,56 OHM,2%,0.2W | 80009 | 307-0677-00 |
| A6R665 | 307-0677-00 | 672-1319-00 | 672-1319-03 | RES NTWK,FXD,FI:4,56 OHM,2%,0.2W | 80009 | 307-0677-00 |
| A6R665 | 307-0677-00 | 672-1346-00 | 672-1346-01 | RES NTWK,FXD,FI:4,56 OHM,2%,0.2W | 80009 | 307-0677-00 |
| A6R665 | 307-0717-00 | 671-1910-00 | | RES NTWK,FXD,FI:4,100 OHM,2%,0.3W EACH | 80009 | 307-0717-00 |
| A6R667 | 307-0677-00 | 672-0283-00 | 672-0283-01 | RES NTWK,FXD,FI:4,56 OHM,2%,0.2W | 80009 | 307-0677-00 |
| A6R667 | 307-0677-00 | 672-1319-00 | 672-1319-03 | RES NTWK,FXD,FI:4,56 OHM,2%,0.2W | 80009 | 307-0677-00 |
| A6R667 | 307-0677-00 | 672-1346-00 | 672-1346-01 | RES NTWK,FXD,FI:4,56 OHM,2%,0.2W | 80009 | 307-0677-00 |
| A6R667 | 307-0717-00 | 671-1910-00 | | RES NTWK,FXD,FI:4,100 OHM,2%,0.3W EACH | 80009 | 307-0717-00 |
| A6R673 | 307-1174-00 | | | RES NTWK,FXD,FI:3.3K OHM,2% | 80009 | 307-1174-00 |
| A6R788 | 307-1174-00 | | | RES NTWK,FXD,FI:3.3K OHM,2% | 80009 | 307-1174-00 |
| A6R888 | 307-1174-00 | | | RES NTWK,FXD,FI:3.3K OHM,2% | 80009 | 307-1174-00 |
| A6R954 | 315-0472-00 | 672-0283-00 | 672-0283-01 | RES,FXD,FILM:4.7K OHM,5%,0.25W | 80009 | 315-0472-00 |
| A6R954 | 315-0472-00 | 672-1319-00 | 672-1319-03 | RES,FXD,FILM:4.7K OHM,5%,0.25W | 80009 | 315-0472-00 |
| A6R954 | 315-0472-00 | 672-1346-00 | 672-1346-01 | RES,FXD,FILM:4.7K OHM,5%,0.25W | 80009 | 315-0472-00 |
| A6R954 | 322-3258-00 | 671-1910-00 | | RES,FXD:METAL FILM;4.75K OHM,1%,0.2W,TC=100 PPM;AXIAL,T&R,SMALL BODY | 80009 | 322-3258-00 |
| A6R964 | 315-0101-00 | 672-0283-00 | 672-0283-01 | RES,FXD,FILM:100 OHM,5%,0.25W | 80009 | 315-0101-00 |
| A6R964 | 315-0101-00 | 672-1319-00 | 672-1319-03 | RES,FXD,FILM:100 OHM,5%,0.25W | 80009 | 315-0101-00 |
| A6R964 | 315-0101-00 | 672-1346-00 | 672-1346-01 | RES,FXD,FILM:100 OHM,5%,0.25W | 80009 | 315-0101-00 |
| A6R964 | 307-0717-00 | 671-1910-00 | | RES NTWK,FXD,FI:4,100 OHM,2%,0.3W EACH | 80009 | 307-0717-00 |
| A6R968 | 322-3193-00 | 671-1910-00 | | RES,FXD:METAL FILM;1K OHM,1%,0.2W,TC=100 PPM;AXIAL,T&R,SMALL BODY | 57668 | CRB20 FXE 1K00 |
| A6R974 | 315-0102-00 | 672-0283-00 | 672-0283-01 | RES,FXD,FILM:1K OHM,5%,0.25W | 80009 | 315-0102-00 |
| A6R974 | 315-0102-00 | 672-1319-00 | 672-1319-03 | RES,FXD,FILM:1K OHM,5%,0.25W | 80009 | 315-0102-00 |
| A6R974 | 315-0102-00 | 672-1346-00 | 672-1346-01 | RES,FXD,FILM:1K OHM,5%,0.25W | 80009 | 315-0102-00 |
| A6R974 | 322-3193-00 | 671-1910-00 | | RES,FXD:METAL FILM;1K OHM,1%,0.2W,TC=100 PPM;AXIAL,T&R,SMALL BODY | 57668 | CRB20 FXE 1K00 |
| A6R975 | 315-0331-00 | 672-0283-00 | 672-0283-01 | RES,FXD,FILM:330 OHM,5%,0.25W | 80009 | 315-0331-00 |
| A6R975 | 315-0331-00 | 672-1319-00 | 672-1319-03 | RES,FXD,FILM:330 OHM,5%,0.25W | 80009 | 315-0331-00 |
| A6R975 | 315-0331-00 | 672-1346-00 | 672-1346-01 | RES,FXD,FILM:330 OHM,5%,0.25W | 80009 | 315-0331-00 |
| A6R975 | 322-3147-00 | 671-1910-00 | | RES,FXD:METAL FILM;332 OHM,1%,0.2W,TC=100 PPM;AXIAL,T&R,SMALL BODY | 80009 | 322-3147-00 |
| A6R976 | 315-0472-00 | 672-0283-00 | 672-0283-01 | RES,FXD,FILM:4.7K OHM,5%,0.25W | 80009 | 315-0472-00 |
| A6R976 | 315-0472-00 | 672-1319-00 | 672-1319-03 | RES,FXD,FILM:4.7K OHM,5%,0.25W | 80009 | 315-0472-00 |
| A6R976 | 315-0472-00 | 672-1346-00 | 672-1346-01 | RES,FXD,FILM:4.7K OHM,5%,0.25W | 80009 | 315-0472-00 |
| A6R976 | 322-3258-00 | 671-1910-00 | | RES,FXD:METAL FILM;4.75K OHM,1%,0.2W,TC=100 PPM;AXIAL,T&R,SMALL BODY | 80009 | 322-3258-00 |
| A6R977 | 315-0472-00 | 672-0283-00 | 672-0283-01 | RES,FXD,FILM:4.7K OHM,5%,0.25W | 80009 | 315-0472-00 |
| A6R977 | 315-0472-00 | 672-1319-00 | 672-1319-03 | RES,FXD,FILM:4.7K OHM,5%,0.25W | 80009 | 315-0472-00 |
| A6R977 | 315-0472-00 | 672-1346-00 | 672-1346-01 | RES,FXD,FILM:4.7K OHM,5%,0.25W | 80009 | 315-0472-00 |
| A6R977 | 322-3258-00 | 671-1910-00 | | RES,FXD:METAL FILM;4.75K OHM,1%,0.2W,TC=100 PPM;AXIAL,T&R,SMALL BODY | 80009 | 322-3258-00 |
| A6R978 | 315-0103-00 | 672-0283-00 | 672-0283-01 | RES,FXD,FILM:10K OHM,5%,0.25W | 80009 | 315-0103-00 |
| A6R978 | 315-0103-00 | 672-1319-00 | 672-1319-03 | RES,FXD,FILM:10K OHM,5%,0.25W | 80009 | 315-0103-00 |
| A6R978 | 315-0103-00 | 672-1346-00 | 672-1346-01 | RES,FXD,FILM:10K OHM,5%,0.25W | 80009 | 315-0103-00 |
| A6R978 | 322-3289-00 | 671-1910-00 | | RES,FXD:METAL FILM;10K OHM,1%,0.2W,TC=100 PPM;AXIAL,T&R,SMALL BODY | 80009 | 322-3289-00 |
| A6R988 | 307-0717-00 | | | RES NTWK,FXD,FI:4,100 OHM,2%,0.3W EACH | 80009 | 307-0717-00 |
| A6R989 | 307-1174-00 | | | RES NTWK,FXD,FI:3.3K OHM,2% | 80009 | 307-1174-00 |
| A6R990 | 307-0717-00 | | | RES NTWK,FXD,FI:4,100 OHM,2%,0.3W EACH | 80009 | 307-0717-00 |
| A6R1203 | 307-0717-00 | 671-1910-00 | | RES NTWK,FXD,FI:4,100 OHM,2%,0.3W EACH | 80009 | 307-0717-00 |
| A6R1207 | 322-3258-00 | 671-1910-00 | | RES,FXD:METAL FILM;4.75K OHM,1%,0.2W,TC=100 PPM;AXIAL,T&R,SMALL BODY | 80009 | 322-3258-00 |
| A6R1539 | 307-0717-00 | 671-1910-00 | | RES NTWK,FXD,FI:4,100 OHM,2%,0.3W EACH | 80009 | 307-0717-00 |

| Component No. | Tektronix Part No. | Serial/Assembly No. Effective | Dscont | Name & Description | Mfr. Code | Mfr. Part No. |
|---|---|---|---|---|---|---|
| A6R2201 | 322-3097-00 | 671-1910-00 | | RES,FXD:METAL FILM;100 OHM,1%,0.2W,TC=100 PPM;AXIAL,T&R,SMALL BODY | 57668 | CRB20 FXE 100E |
| A6R2202 | 322-3193-00 | 671-1910-00 | | RES,FXD:METAL FILM;1K OHM,1%,0.2W,TC=100 PPM;AXIAL,T&R,SMALL BODY | 57668 | CRB20 FXE 1K00 |
| A6R2203 | 322-3097-00 | 671-1910-00 | | RES,FXD:METAL FILM;100 OHM,1%,0.2W,TC=100 PPM;AXIAL,T&R,SMALL BODY | 57668 | CRB20 FXE 100E |
| A6R2204 | 307-0717-00 | 671-1910-00 | | RES NTWK,FXD,FI:4,100 OHM,2%,0.3W EACH | 80009 | 307-0717-00 |
| A6R3201 | 322-3193-00 | 671-1910-00 | | RES,FXD:METAL FILM;1K OHM,1%,0.2W,TC=100 PPM;AXIAL,T&R,SMALL BODY | 57668 | CRB20 FXE 1K00 |
| A6R3202 | 322-3097-00 | 671-1910-00 | | RES,FXD:METAL FILM;100 OHM,1%,0.2W,TC=100 PPM;AXIAL,T&R,SMALL BODY | 57668 | CRB20 FXE 100E |
| A6R3203 | 322-3258-00 | 671-1910-00 | | RES,FXD:METAL FILM;4.75K OHM,1%,0.2W,TC=100 PPM;AXIAL,T&R,SMALL BODY | 80009 | 322-3258-00 |
| A6R3204 | 322-3258-00 | 671-1910-00 | | RES,FXD:METAL FILM;4.75K OHM,1%,0.2W,TC=100 PPM;AXIAL,T&R,SMALL BODY | 80009 | 322-3258-00 |
| A6R3205 | 322-3204-00 | 671-1910-00 | | RES,FXD,FILM:1.3K OHM,1%,0.2W,TC=T0 | 80009 | 322-3204-00 |
| A6R3206 | 322-3250-00 | 671-1910-00 | | RES,FXD:METAL FILM;3.92K OHM,1%,0.2W,TC=100 PPM;AXIAL,T&R,SMALL BODY | 91637 | CCF50-2F39200F |
| A6R3207 | 322-3250-00 | 671-1910-00 | | RES,FXD:METAL FILM;3.92K OHM,1%,0.2W,TC=100 PPM;AXIAL,T&R,SMALL BODY | 91637 | CCF50-2F39200F |
| A6R3208 | 322-3204-00 | 671-1910-00 | | RES,FXD,FILM:1.3K OHM,1%,0.2W,TC=T0 | 80009 | 322-3204-00 |
| A6R3209 | 322-3250-00 | 671-1910-00 | | RES,FXD:METAL FILM;3.92K OHM,1%,0.2W,TC=100 PPM;AXIAL,T&R,SMALL BODY | 91637 | CCF50-2F39200F |
| A6R3210 | 322-3250-00 | 671-1910-00 | | RES,FXD:METAL FILM;3.92K OHM,1%,0.2W,TC=100 PPM;AXIAL,T&R,SMALL BODY | 91637 | CCF50-2F39200F |
| A6R3211 | 322-3246-00 | 671-1910-00 | | RES,FXD,FILM:3.57K OHM,1%,0.2W,TC=T0 | 80009 | 322-3246-00 |
| A6R3212 | 322-3246-00 | 671-1910-00 | | RES,FXD,FILM:3.57K OHM,1%,0.2W,TC=T0 | 80009 | 322-3246-00 |
| A6R3213 | 322-3306-00 | 671-1910-00 | | RES,FXD:METAL FILM;15K OHM,1%,0.2W,TC=100 PPM;AXIAL,T&R,SMALL BODY | 57668 | CRB20 FXE 15K0 |
| A6R3214 | 322-3230-00 | 671-1910-00 | | RES,FXD,FILM:2.43K OHM,1%,0.2W,TC=T0 | 80009 | 322-3230-00 |
| A6R3215 | 322-3258-00 | 671-1910-00 | | RES,FXD:METAL FILM;4.75K OHM,1%,0.2W,TC=100 PPM;AXIAL,T&R,SMALL BODY | 80009 | 322-3258-00 |
| A6R3216 | 322-3193-00 | 671-1910-00 | | RES,FXD:METAL FILM;1K OHM,1%,0.2W,TC=100 PPM;AXIAL,T&R,SMALL BODY | 57668 | CRB20 FXE 1K00 |
| A6R3217 | 322-3193-00 | 671-1910-00 | | RES,FXD:METAL FILM;1K OHM,1%,0.2W,TC=100 PPM;AXIAL,T&R,SMALL BODY | 57668 | CRB20 FXE 1K00 |
| A6R3218 | 322-3114-00 | 671-1910-00 | | RES,FXD:METAL FILM;150 OHM,1%,0.2W,TC=100 PPM;AXIAL,T&R,SMALL BODY | 91637 | CCF50-2-G1500F |
| A6R3219 | 307-1174-00 | 671-1910-00 | | RES NTWK,FXD,FI:3.3K OHM,2% | 80009 | 307-1174-00 |
| A6R3220 | 307-0659-00 | 671-1910-00 | | RES,FXD,FILM:2.2 OHM,5%,0.25W | 19701 | 5043CX2R200J |
| A6R5201 | 322-3162-00 | 671-1910-00 | | RES,FXD:METAL FILM;475 OHM,1%,0.2W,TC=100 PPM;AXIAL,T&R,SMALL BODY | 80009 | 322-3162-00 |
| A6R5274 | 307-0717-00 | 671-1910-00 | | RES NTWK,FXD,FI:4,100 OHM,2%,0.3W EACH | 80009 | 307-0717-00 |
| A6R5275 | 307-0717-00 | 671-1910-00 | | RES NTWK,FXD,FI:4,100 OHM,2%,0.3W EACH | 80009 | 307-0717-00 |
| A6R5589 | 307-0717-00 | 671-1910-00 | | RES NTWK,FXD,FI:4,100 OHM,2%,0.3W EACH | 80009 | 307-0717-00 |
| A6R5590 | 307-0717-00 | 671-1910-00 | | RES NTWK,FXD,FI:4,100 OHM,2%,0.3W EACH | 80009 | 307-0717-00 |
| A6R5794 | 307-0717-00 | 671-1910-00 | | RES NTWK,FXD,FI:4,100 OHM,2%,0.3W EACH | 80009 | 307-0717-00 |
| A6R5795 | 307-0717-00 | 671-1910-00 | | RES NTWK,FXD,FI:4,100 OHM,2%,0.3W EACH | 80009 | 307-0717-00 |
| A6R5894 | 307-0717-00 | 671-1910-00 | | RES NTWK,FXD,FI:4,100 OHM,2%,0.3W EACH | 80009 | 307-0717-00 |
| A6R5895 | 307-0717-00 | 671-1910-00 | | RES NTWK,FXD,FI:4,100 OHM,2%,0.3W EACH | 80009 | 307-0717-00 |
| A6S196 | 260-1589-00 | | | SWITCH,ROCKER:(6)SPST,125MA,30VDC | 81073 | 76SB06S |
| A6S3501 | 260-2549-00 | 671-1910-00 | | SWITCH,PUSH:SPST,MOM,NO,300 GRAM FORCE,SEALED RT ANGLE | 80009 | 260-2549-00 |
| A6TP116 | 214-4085-00 | | | TERM,TEST POINT:0.070 ID,0.220 H,0.063 DIA PCB,0.015 X 0.032 BRASS,W/ RED NYLON COLLAR | 26364 | 104-01-02 |
| A6TP279 | 214-4085-00 | | | TERM,TEST POINT:0.070 ID,0.220 H,0.063 DIA PCB,0.015 X 0.032 BRASS,W/ RED NYLON COLLAR | 26364 | 104-01-02 |
| A6TP916 | 214-4085-00 | | | TERM,TEST POINT:0.070 ID,0.220 H,0.063 DIA PCB,0.015 X 0.032 BRASS,W/ RED NYLON COLLAR | 26364 | 104-01-02 |

| Component No. | Tektronix Part No. | Serial/Assembly No. Effective | Dscont | Name & Description | Mfr. Code | Mfr. Part No. |
|---|---|---|---|---|---|---|
| A6TP994 | 214-4085-00 | | | TERM,TEST POINT:0.070 ID,0.220 H,0.063 DIA PCB,0.015 X 0.032 BRASS,W/ RED NYLON COLLAR | 26364 | 104-01-02 |
| A6U138 | 156-3849-00 | | | IC,MISC: | 80009 | 156-3849-00 |
| A6U142 | 156-2377-00 | | | IC,DIGITAL:ASTTL,MUX;QUAD 2-TO-1 DATA SELECTOR, 3-STATE;74AS257,DIP16.3,TUBE | 80009 | 156-2377-00 |
| A6U148 | 160-6721-00 | 672-0283-00 | 672-0283-01 | MICROCKT,DGTL:OCTAL,16 INPUT AND/OR INVERT, PRGM LOGIC ARRAY,16L8D,DIP20 | 80009 | 160-6721-00 |
| A6U148 | 160-6721-00 | 672-1319-00 | 672-1319-03 | MICROCKT,DGTL:OCTAL,16 INPUT AND/OR INVERT, PRGM LOGIC ARRAY,16L8D,DIP20 | 80009 | 160-6721-00 |
| A6U148 | 160-6721-00 | 672-1346-00 | 672-1346-01 | MICROCKT,DGTL:OCTAL,16 INPUT AND/OR INVERT, PRGM LOGIC ARRAY,16L8D,DIP20 | 80009 | 160-6721-00 |
| A6U148 | 160-8071-00 | 671-1910-00 | | MICROCKT,DGTL:TTL,PRGM LOGIC ARRAY;PAL20L8-10,PRGM,DIP24.3 | 80009 | 160-8071-00 |
| | | | | *MOUNTING PARTS* | | |
| | 136-0752-00 | 672-0283-00 | 672-0283-01 | SKT,PL-IN ELEK:MICROCIRCUIT,20 DIP | 09922 | DILB20P-108 |
| | 136-0752-00 | 672-1319-00 | 672-1319-03 | SKT,PL-IN ELEK:MICROCIRCUIT,20 DIP | 09922 | DILB20P-108 |
| | 136-0752-00 | 672-1346-00 | 672-1346-01 | SKT,PL-IN ELEK:MICROCIRCUIT,20 DIP | 09922 | DILB20P-108 |
| | 136-0925-00 | 671-1910-00 | | SOCKET,DIP:: | 91506 | 224-AG30D |
| | | | | *END MOUNTING PARTS* | | |
| A6U152 | 156-2338-00 | | | IC,DIGITAL:ASTTL,FLIP FLOP;DUAL D-TYPE;74AS74,DIP14.3,TUBE | 80009 | 156-2338-00 |
| A6U162 | 156-2343-00 | 672-0283-00 | 672-0283-01 | IC,DIGITAL:ASTTL,GATE;QUAD 2-INPUT NOR;74AS02,DIP14.3,DUPLICATE OF 156-2327-00 | 80009 | 156-2343-00 |
| A6U162 | 156-2343-00 | 672-1319-00 | 672-1319-03 | IC,DIGITAL:ASTTL,GATE;QUAD 2-INPUT NOR;74AS02,DIP14.3,DUPLICATE OF 156-2327-00 | 80009 | 156-2343-00 |
| A6U162 | 156-2343-00 | 672-1346-00 | 672-1346-01 | IC,DIGITAL:ASTTL,GATE;QUAD 2-INPUT NOR;74AS02,DIP14.3,DUPLICATE OF 156-2327-00 | 80009 | 156-2343-00 |
| A6U168 | 156-2235-00 | 672-0283-00 | 672-0283-01 | IC,DIGITAL:ASTTL,GATE;QUAD 2-INPUT OR BUFFER/DRIVER;74AS1032A,DIP14.3,TUBE | 80009 | 156-2235-00 |
| A6U168 | 156-2235-00 | 672-1319-00 | 672-1319-03 | IC,DIGITAL:ASTTL,GATE;QUAD 2-INPUT OR BUFFER/DRIVER;74AS1032A,DIP14.3,TUBE | 80009 | 156-2235-00 |
| A6U168 | 156-2235-00 | 672-1346-00 | 672-1346-01 | IC,DIGITAL:ASTTL,GATE;QUAD 2-INPUT OR BUFFER/DRIVER;74AS1032A,DIP14.3,TUBE | 80009 | 156-2235-00 |
| A6U172 | 156-0441-00 | | | IC,DIGITAL:FTTL,COMPARATOR;8-BIT IDENTITY, /P=/Q, STANDARD;74F521,DIP20.3,TUBE | 80009 | 156-0441-00 |
| A6U178 | 156-2430-00 | 672-0283-00 | 672-0283-01 | IC,DIGITAL:ASTTL,GATE;QUAD 2-INPUT AND DRIVER;74AS1008,DIP14.3 | 80009 | 156-2430-00 |
| A6U178 | 156-2430-00 | 672-1319-00 | 672-1319-03 | IC,DIGITAL:ASTTL,GATE;QUAD 2-INPUT AND DRIVER;74AS1008,DIP14.3 | 80009 | 156-2430-00 |
| A6U178 | 156-2430-00 | 672-1346-00 | 672-1346-01 | IC,DIGITAL:ASTTL,GATE;QUAD 2-INPUT AND DRIVER;74AS1008,DIP14.3 | 80009 | 156-2430-00 |
| A6U215 | 156-3850-00 | 672-0283-00 | 672-0283-01 | IC,MEMORY:CMOS,SRAM;32K X 8,120NS,3UA,OE;,DIP28.6 | 80009 | 156-3850-00 |
| A6U215 | 156-3850-00 | 672-1319-00 | 672-1319-03 | IC,MEMORY:CMOS,SRAM;32K X 8,120NS,3UA,OE;,DIP28.6 | 80009 | 156-3850-00 |
| A6U215 | 156-3850-00 | 672-1346-00 | 672-1346-01 | IC,MEMORY:CMOS,SRAM;32K X 8,120NS,3UA,OE;,DIP28.6 | 80009 | 156-3850-00 |
| A6U215 | 156-5940-01 | 671-1910-00 | | MICROCKT,DGTL: | 80009 | 156-5940-01 |
| A6U225 | 156-3850-00 | 672-0283-00 | 672-0283-01 | IC,MEMORY:CMOS,SRAM;32K X 8,120NS,3UA,OE;,DIP28.6 | 80009 | 156-3850-00 |
| A6U225 | 156-3850-00 | 672-1319-00 | 672-1319-03 | IC,MEMORY:CMOS,SRAM;32K X 8,120NS,3UA,OE;,DIP28.6 | 80009 | 156-3850-00 |
| A6U225 | 156-3850-00 | 672-1346-00 | 672-1346-01 | IC,MEMORY:CMOS,SRAM;32K X 8,120NS,3UA,OE;,DIP28.6 | 80009 | 156-3850-00 |
| A6U225 | 156-5940-01 | 671-1910-00 | | MICROCKT,DGTL: | 80009 | 156-5940-01 |
| A6U244 | 160-6723-00 | 672-0283-00 | 672-0283-01 | MICROCKT,DGTL:TTL,PRGM EVENT GENERATOR,2971A,DIP24.6 | 80009 | 160-6723-00 |
| A6U244 | 160-6723-00 | 672-1319-00 | 672-1319-03 | MICROCKT,DGTL:TTL,PRGM EVENT GENERATOR,2971A,DIP24.6 | 80009 | 160-6723-00 |
| A6U244 | 160-6723-00 | 672-1346-00 | 672-1346-01 | MICROCKT,DGTL:TTL,PRGM EVENT GENERATOR,2971A,DIP24.6 | 80009 | 160-6723-00 |

| Component No. | Tektronix Part No. | Serial/Assembly No. Effective | Dscont | Name & Description | Mfr. Code | Mfr. Part No. |
|---|---|---|---|---|---|---|
| A6U244 | 160-8073-00 | 671-1910-00 | | MICROCKT,DGTL:TTL,MISC,PROGRAMMABLE EVENT G ENERATOR;2917A,PRGM,DIP24.6 | 80009 | 160-8073-00 |
| | | | | *MOUNTING PARTS* | | |
| | 136-0751-00 | | | SOCKET DIP:: | 09922 | DILB24P108 |
| | | | | *END MOUNTING PARTS* | | |
| A6U265 | 156-1727-00 | | | MICROCKT,DGTL:1 OF 8 DCDR/DEMULTIPLEXER | 04713 | MC74F138 N |
| A6U272 | 160-6722-00 | 672-0283-00 | 672-0283-01 | MICROCKT,DGTL:OCTAL,20 INP AND/OR PRGM,LOGI C ARRAY,20L8A,DIP24 | 80009 | 160-6722-00 |
| A6U272 | 160-6722-00 | 672-1319-00 | 672-1319-03 | MICROCKT,DGTL:OCTAL,20 INP AND/OR PRGM,LOGI C ARRAY,20L8A,DIP24 | 80009 | 160-6722-00 |
| A6U272 | 160-6722-00 | 672-1346-00 | 672-1346-01 | MICROCKT,DGTL:OCTAL,20 INP AND/OR PRGM,LOGI C ARRAY,20L8A,DIP24 | 80009 | 160-6722-00 |
| A6U272 | 160-8074-00 | 671-1910-00 | | IC,DIGITAL:STTL,PLD;PAL, 20L8;20L8A,PRGM | 80009 | 160-8074-00 |
| | | | | *MOUNTING PARTS* | | |
| | 136-0925-00 | | | SOCKET,DIP:: | 91506 | 224-AG30D |
| | | | | *END MOUNTING PARTS* | | |
| A6U274 | 156-2434-00 | 672-0283-00 | 672-0283-01 | IC,DIGITAL:ASTTL,BUFFER/DRIVER;NONINV OCTAL , DRIVER, 3-STATE;74AS244,DIP20.3,TUBE | 80009 | 156-2434-00 |
| A6U274 | 156-2434-00 | 672-1319-00 | 672-1319-03 | IC,DIGITAL:ASTTL,BUFFER/DRIVER;NONINV OCTAL , DRIVER, 3-STATE;74AS244,DIP20.3,TUBE | 80009 | 156-2434-00 |
| A6U274 | 156-2434-00 | 672-1346-00 | 672-1346-01 | IC,DIGITAL:ASTTL,BUFFER/DRIVER;NONINV OCTAL , DRIVER, 3-STATE;74AS244,DIP20.3,TUBE | 80009 | 156-2434-00 |
| A6U274 | 156-2930-00 | 671-1910-00 | | IC,DIGITAL:ASTTL,BUS TRANSCEIVER;OCTAL, NON INV, 3-STATE;74AS245,DIP20.3,TUBE | 01295 | SN74AS245N |
| | | | | *MOUNTING PARTS* | | |
| | 136-0752-00 | | | SKT,PL-IN ELEK:MICROCIRCUIT,20 DIP | 09922 | DILB20P-108 |
| | | | | *END MOUNTING PARTS* | | |
| A6U333 | 156-4071-00 | 671-1910-01 | | IC,MEMORY:CMOS,EPROM,256K X 8,200NS;FLASH,2 8F020,DIP32.6 | 80009 | 156-4071-00 |
| A6U415 | 156-3850-00 | 672-0283-00 | 672-0283-01 | IC,MEMORY:CMOS,SRAM;32K X 8,120NS,3UA,OE;,D IP28.6 | 80009 | 156-3850-00 |
| A6U415 | 156-3850-00 | 672-1319-00 | 672-1319-03 | IC,MEMORY:CMOS,SRAM;32K X 8,120NS,3UA,OE;,D IP28.6 | 80009 | 156-3850-00 |
| A6U415 | 156-3850-00 | 672-1346-00 | 672-1346-01 | IC,MEMORY:CMOS,SRAM;32K X 8,120NS,3UA,OE;,D IP28.6 | 80009 | 156-3850-00 |
| A6U415 | 156-5940-01 | 671-1910-00 | | MICROCKT,DGTL: | 80009 | 156-5940-01 |
| A6U425 | 156-3850-00 | 672-0283-00 | 672-0283-01 | IC,MEMORY:CMOS,SRAM;32K X 8,120NS,3UA,OE;,D IP28.6 | 80009 | 156-3850-00 |
| A6U425 | 156-3850-00 | 672-1319-00 | 672-1319-03 | IC,MEMORY:CMOS,SRAM;32K X 8,120NS,3UA,OE;,D IP28.6 | 80009 | 156-3850-00 |
| A6U425 | 156-3850-00 | 672-1346-00 | 672-1346-01 | IC,MEMORY:CMOS,SRAM;32K X 8,120NS,3UA,OE;,D IP28.6 | 80009 | 156-3850-00 |
| A6U425 | 156-5940-01 | 671-1910-00 | | MICROCKT,DGTL: | 80009 | 156-5940-01 |
| A6U436 | 156-4071-00 | 671-1910-01 | | IC,MEMORY:CMOS,EPROM,256K X 8,200NS;FLASH,2 8F020,DIP32.6 | 80009 | 156-4071-00 |
| A6U539 | 156-2434-00 | | | IC,DIGITAL:ASTTL,BUFFER/DRIVER;NONINV OCTAL , DRIVER, 3-STATE;74AS244,DIP20.3,TUBE | 80009 | 156-2434-00 |
| | | | | *MOUNTING PARTS* | | |
| | 136-0752-00 | | | SKT,PL-IN ELEK:MICROCIRCUIT,20 DIP | 09922 | DILB20P-108 |
| | | | | *END MOUNTING PARTS* | | |
| A6U559 | 156-2434-00 | | | IC,DIGITAL:ASTTL,BUFFER/DRIVER;NONINV OCTAL , DRIVER, 3-STATE;74AS244,DIP20.3,TUBE | 80009 | 156-2434-00 |
| | | | | *MOUNTING PARTS* | | |
| | 136-0752-00 | | | SKT,PL-IN ELEK:MICROCIRCUIT,20 DIP | 09922 | DILB20P-108 |
| | | | | *END MOUNTING PARTS* | | |
| A6U589 | 156-2434-00 | 672-0283-00 | 672-0283-01 | IC,DIGITAL:ASTTL,BUFFER/DRIVER;NONINV OCTAL , DRIVER, 3-STATE;74AS244,DIP20.3,TUBE | 80009 | 156-2434-00 |
| A6U589 | 156-2434-00 | 672-1319-00 | 672-1319-03 | IC,DIGITAL:ASTTL,BUFFER/DRIVER;NONINV OCTAL , DRIVER, 3-STATE;74AS244,DIP20.3,TUBE | 80009 | 156-2434-00 |
| A6U589 | 156-2434-00 | 672-1346-00 | 672-1346-01 | IC,DIGITAL:ASTTL,BUFFER/DRIVER;NONINV OCTAL , DRIVER, 3-STATE;74AS244,DIP20.3,TUBE | 80009 | 156-2434-00 |

| Component No. | Tektronix Part No. | Serial/Assembly No. Effective | Dscont | Name & Description | Mfr. Code | Mfr. Part No. |
|---|---|---|---|---|---|---|
| A6U589 | 156-2930-00 | 671-1910-00 | | IC,DIGITAL:ASTTL,BUS TRANSCEIVER;OCTAL, NON INV, 3-STATE;74AS245,DIP20.3,TUBE *MOUNTING PARTS* | 01295 | SN74AS245N |
| | 136-0752-00 | | | SKT,PL-IN ELEK:MICROCIRCUIT,20 DIP *END MOUNTING PARTS* | 09922 | DILB20P-108 |
| A6U685 | 156-2434-00 | | | IC,DIGITAL:ASTTL,BUFFER/DRIVER;NONINV OCTAL , DRIVER, 3-STATE;74AS244,DIP20.3,TUBE *MOUNTING PARTS* | 80009 | 156-2434-00 |
| | 136-0752-00 | | | SKT,PL-IN ELEK:MICROCIRCUIT,20 DIP *END MOUNTING PARTS* | 09922 | DILB20P-108 |
| A6U713 | 156-3850-00 | 672-0283-00 | 672-0283-01 | IC,MEMORY:CMOS,SRAM;32K X 8,120NS,3UA,OE;,D IP28.6 | 80009 | 156-3850-00 |
| A6U713 | 156-3850-00 | 672-1319-00 | 672-1319-03 | IC,MEMORY:CMOS,SRAM;32K X 8,120NS,3UA,OE;,D IP28.6 | 80009 | 156-3850-00 |
| A6U713 | 156-3850-00 | 672-1346-00 | 672-1346-01 | IC,MEMORY:CMOS,SRAM;32K X 8,120NS,3UA,OE;,D IP28.6 | 80009 | 156-3850-00 |
| A6U713 | 156-5940-01 | 671-1910-00 | | MICROCKT,DGTL: | 80009 | 156-5940-01 |
| A6U723 | 156-3850-00 | 672-0283-00 | 672-0283-01 | IC,MEMORY:CMOS,SRAM;32K X 8,120NS,3UA,OE;,D IP28.6 | 80009 | 156-3850-00 |
| A6U723 | 156-3850-00 | 672-1319-00 | 672-1319-03 | IC,MEMORY:CMOS,SRAM;32K X 8,120NS,3UA,OE;,D IP28.6 | 80009 | 156-3850-00 |
| A6U723 | 156-3850-00 | 672-1346-00 | 672-1346-01 | IC,MEMORY:CMOS,SRAM;32K X 8,120NS,3UA,OE;,D IP28.6 | 80009 | 156-3850-00 |
| A6U723 | 156-5940-01 | 671-1910-00 | | MICROCKT,DGTL: | 80009 | 156-5940-01 |
| A6U730 | 156-4071-00 | 671-1910-01 | | IC,MEMORY:CMOS,EPROM,256K X 8,200NS;FLASH,2 8F020,DIP32.6 | 80009 | 156-4071-00 |
| A6U794 | 156-2434-00 | 672-0283-00 | 672-0283-01 | IC,DIGITAL:ASTTL,BUFFER/DRIVER;NONINV OCTAL , DRIVER, 3-STATE;74AS244,DIP20.3,TUBE | 80009 | 156-2434-00 |
| A6U794 | 156-2434-00 | 672-1319-00 | 672-1319-03 | IC,DIGITAL:ASTTL,BUFFER/DRIVER;NONINV OCTAL , DRIVER, 3-STATE;74AS244,DIP20.3,TUBE | 80009 | 156-2434-00 |
| A6U794 | 156-2434-00 | 672-1346-00 | 672-1346-01 | IC,DIGITAL:ASTTL,BUFFER/DRIVER;NONINV OCTAL , DRIVER, 3-STATE;74AS244,DIP20.3,TUBE | 80009 | 156-2434-00 |
| A6U794 | 156-2930-00 | 671-1910-00 | | IC,DIGITAL:ASTTL,BUS TRANSCEIVER;OCTAL, NON INV, 3-STATE;74AS245,DIP20.3,TUBE *MOUNTING PARTS* | 01295 | SN74AS245N |
| | 136-0752-00 | | | SKT,PL-IN ELEK:MICROCIRCUIT,20 DIP *END MOUNTING PARTS* | 09922 | DILB20P-108 |
| A6U816 | 156-3850-00 | 672-0283-00 | 672-0283-01 | IC,MEMORY:CMOS,SRAM;32K X 8,120NS,3UA,OE;,D IP28.6 | 80009 | 156-3850-00 |
| A6U816 | 156-3850-00 | 672-1319-00 | 672-1319-03 | IC,MEMORY:CMOS,SRAM;32K X 8,120NS,3UA,OE;,D IP28.6 | 80009 | 156-3850-00 |
| A6U816 | 156-3850-00 | 672-1346-00 | 672-1346-01 | IC,MEMORY:CMOS,SRAM;32K X 8,120NS,3UA,OE;,D IP28.6 | 80009 | 156-3850-00 |
| A6U816 | 156-5940-01 | 671-1910-00 | | MICROCKT,DGTL: | 80009 | 156-5940-01 |
| A6U826 | 156-3850-00 | 672-0283-00 | 672-0283-01 | IC,MEMORY:CMOS,SRAM;32K X 8,120NS,3UA,OE;,D IP28.6 | 80009 | 156-3850-00 |
| A6U826 | 156-3850-00 | 672-1319-00 | 672-1319-03 | IC,MEMORY:CMOS,SRAM;32K X 8,120NS,3UA,OE;,D IP28.6 | 80009 | 156-3850-00 |
| A6U826 | 156-3850-00 | 672-1346-00 | 672-1346-01 | IC,MEMORY:CMOS,SRAM;32K X 8,120NS,3UA,OE;,D IP28.6 | 80009 | 156-3850-00 |
| A6U826 | 156-5940-01 | 671-1910-00 | | MICROCKT,DGTL: | 80009 | 156-5940-01 |
| A6U834 | 156-4071-00 | 671-1910-01 | | IC,MEMORY:CMOS,EPROM,256K X 8,200NS;FLASH,2 8F020,DIP32.6 | 80009 | 156-4071-00 |
| A6U894 | 156-2434-00 | 672-0283-00 | 672-0283-01 | IC,DIGITAL:ASTTL,BUFFER/DRIVER;NONINV OCTAL , DRIVER, 3-STATE;74AS244,DIP20.3,TUBE | 80009 | 156-2434-00 |
| A6U894 | 156-2434-00 | 672-1319-00 | 672-1319-03 | IC,DIGITAL:ASTTL,BUFFER/DRIVER;NONINV OCTAL , DRIVER, 3-STATE;74AS244,DIP20.3,TUBE | 80009 | 156-2434-00 |
| A6U894 | 156-2434-00 | 672-1346-00 | 672-1346-01 | IC,DIGITAL:ASTTL,BUFFER/DRIVER;NONINV OCTAL , DRIVER, 3-STATE;74AS244,DIP20.3,TUBE | 80009 | 156-2434-00 |
| A6U894 | 156-2930-00 | 671-1910-00 | | IC,DIGITAL:ASTTL,BUS TRANSCEIVER;OCTAL, NON INV, 3-STATE;74AS245,DIP20.3,TUBE *MOUNTING PARTS* | 01295 | SN74AS245N |

| Component No. | Tektronix Part No. | Serial/Assembly No. Effective | Dscont | Name & Description | Mfr. Code | Mfr. Part No. |
|---|---|---|---|---|---|---|
| | 136-0752-00 | | | SKT,PL-IN ELEK:MICROCIRCUIT,20 DIP<br>*END MOUNTING PARTS* | 09922 | DILB20P-108 |
| A6U958 | 156-3062-00 | | | IC,DIGITAL:HCMOS,GATE;QUAD 2-INPUT NAND,SCH MITT TRIGGER;74HC132, DIP14.3,TUBE | 01295 | SN 74HC132N |
| A6U968 | 156-2463-00 | | | IC,DIGITAL:HCMOS,GATE;QUAD 2-INPUT OR;74HC32,DIP14.3 | 18324 | 74HC32N |
| A6U996 | 156-2930-00 | | | IC,DIGITAL:ASTTL,BUS TRANSCEIVER;OCTAL, NON INV, 3-STATE;74AS245,DIP20.3,TUBE<br>*MOUNTING PARTS* | 01295 | SN74AS245N |
| | 136-0752-00 | | | SKT,PL-IN ELEK:MICROCIRCUIT,20 DIP<br>*END MOUNTING PARTS* | 09922 | DILB20P-108 |
| A6U2001 | 160-8076-00 | 671-1910-00 | | IC,DIGITAL:STTL,PLD;PAL, 16L8;16L8D,PRGM<br>*MOUNTING PARTS* | 80009 | 160-8076-00 |
| | 136-0752-00 | 671-1910-00 | | SKT,PL-IN ELEK:MICROCIRCUIT,20 DIP<br>*END MOUNTING PARTS* | 09922 | DILB20P-108 |
| A6U2002 | 160-8072-00 | 671-1910-00 | | IC,DIGITAL:STTL,PLD;PAL, 20L8;20L8-10,DIP24.3,PRGM<br>*MOUNTING PARTS* | 80009 | 160-8072-00 |
| | 136-0925-00 | 671-1910-00 | | SOCKET,DIP::<br>*END MOUNTING PARTS* | 91506 | 224-AG30D |
| A6U3001 | 160-8075-00 | 671-1910-00 | | IC,DIGITAL:STTL,PLD;PAL, 20L8;20L8A,PRGM<br>*MOUNTING PARTS* | 80009 | 160-8075-00 |
| | 136-0925-00 | 671-1910-00 | | SOCKET,DIP::<br>*END MOUNTING PARTS* | 91506 | 224-AG30D |
| A6U3002 | 156-1748-02 | 671-1910-00 | | IC,DIGITAL:ALSTTL,TRANSCEIVER;OCTAL NONINV, 3-STATE;74ALS245,DIP20.3,TUBE<br>*MOUNTING PARTS* | 01295 | SN74ALS245AN3 |
| | 136-0752-00 | 671-1910-00 | | SKT,PL-IN ELEK:MICROCIRCUIT,20 DIP<br>*END MOUNTING PARTS* | 09922 | DILB20P-108 |
| A6U3003 | 160-8077-00 | 671-1910-00 | | IC,DIGITAL:STTL,PLD;PAL,20RA10,20NS,30MHZ,200MA;20RA10,DIP24.3,PRGM<br>*MOUNTING PARTS* | 80009 | 160-8077-00 |
| | 136-0925-00 | 671-1910-00 | | SOCKET,DIP::<br>*END MOUNTING PARTS* | 91506 | 224-AG30D |
| A6U3004 | 160-8078-00 | 671-1910-00 | | MICROCKT,DGTL:STTL,PLD;PAL,20RA10,20NS,30MHZ,200MA;20RA10,DIP24.3,PRGM<br>*MOUNTING PARTS* | 80009 | 160-8078-00 |
| | 136-0925-00 | 671-1910-00 | | SOCKET,DIP::<br>*END MOUNTING PARTS* | 91506 | 224-AG30D |
| A6U3005 | 156-3580-00 | 671-1910-00 | | IC,DIGITAL:FTTL,COUNTER;8-BIT BIDIRECTIONAL BINARY;74F269,DIP24.3,TUBE | 80009 | 156-3580-00 |
| A6U3006 | 156-1664-00 | 671-1910-00 | | IC,DIGITAL:ALSTTL,FLIP FLOP;OCTAL NONINV D-TYPE, 3-STATE;74ALS574,DIP20.3,TUBE | 80009 | 156-1664-00 |
| A6U3007 | 156-2391-00 | 671-1910-00 | | IC,DIGITAL:ALSTTL,BUFFER/DRIVER;OCTAL NONINV, 3-STATE;74ALS541,DIP20.3,TUBE | 80009 | 156-2391-00 |
| A6U3008 | 156-4073-00 | 671-1910-00 | | IC,MISC: | 80009 | 156-4073-00 |
| A6U3009 | 156-4047-00 | 671-1910-00 | | IC,LINEAR: | 80009 | 156-4047-00 |
| A6U3010 | 156-4072-00 | 671-1910-00 | | IC,MISC: | 80009 | 156-4072-00 |
| A6U3011 | 156-4072-00 | 671-1910-00 | | IC,MISC: | 80009 | 156-4072-00 |
| A6W314 | 131-0566-00 | | | BUS,CONDUCTOR:DUMMY RES,0.094 OD X 0.225 L | 80009 | 131-0566-00 |
| A6W324 | 131-0566-00 | | | BUS,CONDUCTOR:DUMMY RES,0.094 OD X 0.225 L | 80009 | 131-0566-00 |
| A6W419 | 131-0566-00 | | | BUS,CONDUCTOR:DUMMY RES,0.094 OD X 0.225 L | 80009 | 131-0566-00 |
| A6W429 | 131-0566-00 | | | BUS,CONDUCTOR:DUMMY RES,0.094 OD X 0.225 L | 80009 | 131-0566-00 |
| A6W522 | 131-0566-00 | 672-0283-00 | 672-0283-01 | BUS,CONDUCTOR:DUMMY RES,0.094 OD X 0.225 L | 80009 | 131-0566-00 |
| A6W522 | 131-0566-00 | 672-1319-00 | 672-1319-03 | BUS,CONDUCTOR:DUMMY RES,0.094 OD X 0.225 L | 80009 | 131-0566-00 |
| A6W522 | 131-0566-00 | 672-1346-00 | 672-1346-01 | BUS,CONDUCTOR:DUMMY RES,0.094 OD X 0.225 L | 80009 | 131-0566-00 |
| A6W544 | 131-0566-00 | 672-0283-00 | 672-0283-01 | BUS,CONDUCTOR:DUMMY RES,0.094 OD X 0.225 L | 80009 | 131-0566-00 |
| A6W544 | 131-0566-00 | 672-1319-00 | 672-1319-03 | BUS,CONDUCTOR:DUMMY RES,0.094 OD X 0.225 L | 80009 | 131-0566-00 |
| A6W544 | 131-0566-00 | 672-1346-00 | 672-1346-01 | BUS,CONDUCTOR:DUMMY RES,0.094 OD X 0.225 L | 80009 | 131-0566-00 |
| A6W545 | 131-0566-00 | 672-0283-00 | 672-0283-01 | BUS,CONDUCTOR:DUMMY RES,0.094 OD X 0.225 L | 80009 | 131-0566-00 |
| A6W545 | 131-0566-00 | 672-1319-00 | 672-1319-03 | BUS,CONDUCTOR:DUMMY RES,0.094 OD X 0.225 L | 80009 | 131-0566-00 |

| Component No. | Tektronix Part No. | Serial/Assembly No. Effective | Dscont | Name & Description | Mfr. Code | Mfr. Part No. |
|---|---|---|---|---|---|---|
| A6W545 | 131-0566-00 | 672-1346-00 | 672-1346-01 | BUS,CONDUCTOR:DUMMY RES,0.094 OD X 0.225 L | 80009 | 131-0566-00 |
| A6W546 | 131-0566-00 | 672-0283-00 | 672-0283-01 | BUS,CONDUCTOR:DUMMY RES,0.094 OD X 0.225 L | 80009 | 131-0566-00 |
| A6W546 | 131-0566-00 | 672-1319-00 | 672-1319-03 | BUS,CONDUCTOR:DUMMY RES,0.094 OD X 0.225 L | 80009 | 131-0566-00 |
| A6W546 | 131-0566-00 | 672-1346-00 | 672-1346-01 | BUS,CONDUCTOR:DUMMY RES,0.094 OD X 0.225 L | 80009 | 131-0566-00 |
| A6W717 | 131-0566-00 | | | BUS,CONDUCTOR:DUMMY RES,0.094 OD X 0.225 L | 80009 | 131-0566-00 |
| A6W727 | 131-0566-00 | | | BUS,CONDUCTOR:DUMMY RES,0.094 OD X 0.225 L | 80009 | 131-0566-00 |
| A6W913 | 131-0566-00 | | | BUS,CONDUCTOR:DUMMY RES,0.094 OD X 0.225 L | 80009 | 131-0566-00 |
| A6W923 | 131-0566-00 | | | BUS,CONDUCTOR:DUMMY RES,0.094 OD X 0.225 L | 80009 | 131-0566-00 |
| A6XU333 | 136-0963-00 | | | SKT,PL-IN ELEK:MICROCKT,32 PIN (IC REPLACEABLE AT A6 ONLY) | 00779 | 2-644018-3 |
| A6XU339 | 136-0963-00 | | | SKT,PL-IN ELEK:MICROCKT,32 PIN (IC REPLACEABLE AT A6 ONLY) | 00779 | 2-644018-3 |
| A6XU353 | 136-0963-00 | | | SKT,PL-IN ELEK:MICROCKT,32 PIN (IC REPLACEABLE AT A6 ONLY) | 00779 | 2-644018-3 |
| A6XU359 | 136-0963-00 | | | SKT,PL-IN ELEK:MICROCKT,32 PIN (IC REPLACEABLE AT A6 ONLY) | 00779 | 2-644018-3 |
| A6XU373 | 136-0963-00 | | | SKT,PL-IN ELEK:MICROCKT,32 PIN (IC REPLACEABLE AT A6 ONLY) | 00779 | 2-644018-3 |
| A6XU379 | 136-0963-00 | | | SKT,PL-IN ELEK:MICROCKT,32 PIN (IC REPLACEABLE AT A6 ONLY) | 00779 | 2-644018-3 |
| A6XU436 | 136-0963-00 | | | SKT,PL-IN ELEK:MICROCKT,32 PIN (IC REPLACEABLE AT A6 ONLY) | 00779 | 2-644018-3 |
| A6XU456 | 136-0963-00 | | | SKT,PL-IN ELEK:MICROCKT,32 PIN (IC REPLACEABLE AT A6 ONLY) | 00779 | 2-644018-3 |
| A6XU476 | 136-0963-00 | | | SKT,PL-IN ELEK:MICROCKT,32 PIN (IC REPLACEABLE AT A6 ONLY) | 00779 | 2-644018-3 |
| A6XU533 | 136-0963-00 | | | SKT,PL-IN ELEK:MICROCKT,32 PIN (IC REPLACEABLE AT A6 ONLY) | 00779 | 2-644018-3 |
| A6XU553 | 136-0963-00 | | | SKT,PL-IN ELEK:MICROCKT,32 PIN (IC REPLACEABLE AT A6 ONLY) | 00779 | 2-644018-3 |
| A6XU573 | 136-0963-00 | | | SKT,PL-IN ELEK:MICROCKT,32 PIN (IC REPLACEABLE AT A6 ONLY) | 00779 | 2-644018-3 |
| A6XU730 | 136-0963-00 | | | SKT,PL-IN ELEK:MICROCKT,32 PIN (IC REPLACEABLE AT A6 ONLY) | 00779 | 2-644018-3 |
| A6XU737 | 136-0963-00 | | | SKT,PL-IN ELEK:MICROCKT,32 PIN (IC REPLACEABLE AT A6 ONLY) | 00779 | 2-644018-3 |
| A6XU750 | 136-0963-00 | | | SKT,PL-IN ELEK:MICROCKT,32 PIN (IC REPLACEABLE AT A6 ONLY) | 00779 | 2-644018-3 |
| A6XU757 | 136-0963-00 | | | SKT,PL-IN ELEK:MICROCKT,32 PIN (IC REPLACEABLE AT A6 ONLY) | 00779 | 2-644018-3 |
| A6XU770 | 136-0963-00 | | | SKT,PL-IN ELEK:MICROCKT,32 PIN (IC REPLACEABLE AT A6 ONLY) | 00779 | 2-644018-3 |
| A6XU777 | 136-0963-00 | | | SKT,PL-IN ELEK:MICROCKT,32 PIN (IC REPLACEABLE AT A6 ONLY) | 00779 | 2-644018-3 |
| A6XU834 | 136-0963-00 | | | SKT,PL-IN ELEK:MICROCKT,32 PIN (IC REPLACEABLE AT A6 ONLY) | 00779 | 2-644018-3 |
| A6XU854 | 136-0963-00 | | | SKT,PL-IN ELEK:MICROCKT,32 PIN (IC REPLACEABLE AT A6 ONLY) | 00779 | 2-644018-3 |
| A6XU874 | 136-0963-00 | | | SKT,PL-IN ELEK:MICROCKT,32 PIN (IC REPLACEABLE AT A6 ONLY) | 00779 | 2-644018-3 |
| A6XU932 | 136-0963-00 | | | SKT,PL-IN ELEK:MICROCKT,32 PIN (IC REPLACEABLE AT A6 ONLY) | 00779 | 2-644018-3 |
| A6XU952 | 136-0963-00 | | | SKT,PL-IN ELEK:MICROCKT,32 PIN (IC REPLACEABLE AT A6 ONLY) | 00779 | 2-644018-3 |
| A6XU972 | 136-0963-00 | | | SKT,PL-IN ELEK:MICROCKT,32 PIN (IC REPLACEABLE AT A6 ONLY) | 00779 | 2-644018-3 |
| A6Y235 | 119-1413-00 | | | OSC,XTAL CLOCK:20.0MHZ, +/-0.05 %, TTL, 4 P IN 14 PIN DIP COMPATIBLE | 14301 | AE 404-417 |

| Component No. | Tektronix Part No. | Serial/Assembly No. Effective | Dscont | Name & Description | Mfr. Code | Mfr. Part No. |
|---|---|---|---|---|---|---|
| A7 | 671-1306-00 | B022000 | B022470 | CIRCUIT BD ASSY:DATA ACQUISITION 2 | 80009 | 671-1306-00 |
| A7 | 671-1306-01 | B022471 | | CIRCUIT BD ASSY:DATA ACQUISITION 2 | 80009 | 671-1306-01 |
| | | | | *ATTACHED PARTS* | | |
| | 105-0160-00 | | | EJECTOR,CKT BD:WHITE PLASTIC (QUANTITY 2) | 80009 | 105-0160-00 |
| | 214-1337-00 | | | PIN,SPRING:0.25 L X 0.103 OD,STL CD PL (QUANTITY 2) | 000BK | ORDER BY DESCR |
| | | | | *END ATTACHED PARTS* | | |
| A7C104 | 281-0775-01 | | | CAP,FXD,CER DI:0.1UF,20%,50V | 04222 | SA105E104MAA |
| A7C107 | 281-0775-01 | | | CAP,FXD,CER DI:0.1UF,20%,50V | 04222 | SA105E104MAA |
| A7C110 | 281-0775-01 | | | CAP,FXD,CER DI:0.1UF,20%,50V | 04222 | SA105E104MAA |
| A7C113 | 281-0775-01 | | | CAP,FXD,CER DI:0.1UF,20%,50V | 04222 | SA105E104MAA |
| A7C116 | 281-0775-01 | | | CAP,FXD,CER DI:0.1UF,20%,50V | 04222 | SA105E104MAA |
| A7C119 | 281-0775-01 | | | CAP,FXD,CER DI:0.1UF,20%,50V | 04222 | SA105E104MAA |
| A7C122 | 281-0775-01 | | | CAP,FXD,CER DI:0.1UF,20%,50V | 04222 | SA105E104MAA |
| A7C126 | 281-0775-01 | | | CAP,FXD,CER DI:0.1UF,20%,50V | 04222 | SA105E104MAA |
| A7C130 | 281-0775-01 | | | CAP,FXD,CER DI:0.1UF,20%,50V | 04222 | SA105E104MAA |
| A7C134 | 281-0775-01 | | | CAP,FXD,CER DI:0.1UF,20%,50V | 04222 | SA105E104MAA |
| A7C138 | 281-0775-01 | | | CAP,FXD,CER DI:0.1UF,20%,50V | 04222 | SA105E104MAA |
| A7C141 | 281-0775-01 | | | CAP,FXD,CER DI:0.1UF,20%,50V | 04222 | SA105E104MAA |
| A7C150 | 281-0775-01 | | | CAP,FXD,CER DI:0.1UF,20%,50V | 04222 | SA105E104MAA |
| A7C152 | 281-0775-01 | | | CAP,FXD,CER DI:0.1UF,20%,50V | 04222 | SA105E104MAA |
| A7C155 | 281-0775-01 | | | CAP,FXD,CER DI:0.1UF,20%,50V | 04222 | SA105E104MAA |
| A7C158 | 281-0775-01 | | | CAP,FXD,CER DI:0.1UF,20%,50V | 04222 | SA105E104MAA |
| A7C189 | 281-0775-01 | | | CAP,FXD,CER DI:0.1UF,20%,50V | 04222 | SA105E104MAA |
| A7C193 | 281-0775-01 | | | CAP,FXD,CER DI:0.1UF,20%,50V | 04222 | SA105E104MAA |
| A7C201 | 281-0814-00 | | | CAP,FXD,CER DI:100 PF,10%,100V | 80009 | 281-0814-00 |
| A7C222 | 281-0814-00 | | | CAP,FXD,CER DI:100 PF,10%,100V | 80009 | 281-0814-00 |
| A7C234 | 281-0775-01 | | | CAP,FXD,CER DI:0.1UF,20%,50V | 04222 | SA105E104MAA |
| A7C238 | 281-0775-01 | | | CAP,FXD,CER DI:0.1UF,20%,50V | 04222 | SA105E104MAA |
| A7C239 | 281-0814-00 | | | CAP,FXD,CER DI:100 PF,10%,100V | 80009 | 281-0814-00 |
| A7C241 | 281-0775-01 | | | CAP,FXD,CER DI:0.1UF,20%,50V | 04222 | SA105E104MAA |
| A7C244 | 281-0775-01 | | | CAP,FXD,CER DI:0.1UF,20%,50V | 04222 | SA105E104MAA |
| A7C247 | 281-0775-01 | | | CAP,FXD,CER DI:0.1UF,20%,50V | 04222 | SA105E104MAA |
| A7C250 | 281-0775-01 | | | CAP,FXD,CER DI:0.1UF,20%,50V | 04222 | SA105E104MAA |
| A7C252 | 281-0775-01 | | | CAP,FXD,CER DI:0.1UF,20%,50V | 04222 | SA105E104MAA |
| A7C255 | 281-0775-01 | | | CAP,FXD,CER DI:0.1UF,20%,50V | 04222 | SA105E104MAA |
| A7C258 | 281-0775-01 | | | CAP,FXD,CER DI:0.1UF,20%,50V | 04222 | SA105E104MAA |
| A7C283 | 281-0775-01 | | | CAP,FXD,CER DI:0.1UF,20%,50V | 04222 | SA105E104MAA |
| A7C290 | 281-0775-01 | | | CAP,FXD,CER DI:0.1UF,20%,50V | 04222 | SA105E104MAA |
| A7C301 | 281-0775-01 | | | CAP,FXD,CER DI:0.1UF,20%,50V | 04222 | SA105E104MAA |
| A7C304 | 281-0775-01 | | | CAP,FXD,CER DI:0.1UF,20%,50V | 04222 | SA105E104MAA |
| A7C307 | 281-0775-01 | | | CAP,FXD,CER DI:0.1UF,20%,50V | 04222 | SA105E104MAA |
| A7C310 | 281-0775-01 | | | CAP,FXD,CER DI:0.1UF,20%,50V | 04222 | SA105E104MAA |
| A7C313 | 281-0775-01 | | | CAP,FXD,CER DI:0.1UF,20%,50V | 04222 | SA105E104MAA |
| A7C316 | 281-0775-01 | | | CAP,FXD,CER DI:0.1UF,20%,50V | 04222 | SA105E104MAA |
| A7C319 | 281-0775-01 | | | CAP,FXD,CER DI:0.1UF,20%,50V | 04222 | SA105E104MAA |
| A7C322 | 281-0775-01 | | | CAP,FXD,CER DI:0.1UF,20%,50V | 04222 | SA105E104MAA |
| A7C326 | 281-0775-01 | | | CAP,FXD,CER DI:0.1UF,20%,50V | 04222 | SA105E104MAA |
| A7C330 | 281-0775-01 | | | CAP,FXD,CER DI:0.1UF,20%,50V | 04222 | SA105E104MAA |
| A7C334 | 281-0775-01 | | | CAP,FXD,CER DI:0.1UF,20%,50V | 04222 | SA105E104MAA |
| A7C338 | 281-0814-00 | | | CAP,FXD,CER DI:100 PF,10%,100V | 80009 | 281-0814-00 |
| A7C383 | 281-0775-01 | | | CAP,FXD,CER DI:0.1UF,20%,50V | 04222 | SA105E104MAA |
| A7C401 | 281-0814-00 | | | CAP,FXD,CER DI:100 PF,10%,100V | 80009 | 281-0814-00 |
| A7C438 | 281-0775-01 | | | CAP,FXD,CER DI:0.1UF,20%,50V | 04222 | SA105E104MAA |
| A7C441 | 281-0775-01 | | | CAP,FXD,CER DI:0.1UF,20%,50V | 04222 | SA105E104MAA |
| A7C444 | 281-0775-01 | | | CAP,FXD,CER DI:0.1UF,20%,50V | 04222 | SA105E104MAA |
| A7C447 | 281-0775-01 | | | CAP,FXD,CER DI:0.1UF,20%,50V | 04222 | SA105E104MAA |
| A7C450 | 281-0775-01 | | | CAP,FXD,CER DI:0.1UF,20%,50V | 04222 | SA105E104MAA |

| Component No. | Tektronix Part No. | Serial/Assembly No. Effective | Dscont | Name & Description | Mfr. Code | Mfr. Part No. |
|---|---|---|---|---|---|---|
| A7C452 | 281-0775-01 | | | CAP,FXD,CER DI:0.1UF,20%,50V | 04222 | SA105E104MAA |
| A7C455 | 281-0775-01 | | | CAP,FXD,CER DI:0.1UF,20%,50V | 04222 | SA105E104MAA |
| A7C458 | 281-0775-01 | | | CAP,FXD,CER DI:0.1UF,20%,50V | 04222 | SA105E104MAA |
| A7C462 | 281-0775-01 | | | CAP,FXD,CER DI:0.1UF,20%,50V | 04222 | SA105E104MAA |
| A7C467 | 281-0775-01 | | | CAP,FXD,CER DI:0.1UF,20%,50V | 04222 | SA105E104MAA |
| A7C472 | 281-0775-01 | | | CAP,FXD,CER DI:0.1UF,20%,50V | 04222 | SA105E104MAA |
| A7C477 | 281-0775-01 | | | CAP,FXD,CER DI:0.1UF,20%,50V | 04222 | SA105E104MAA |
| A7C501 | 281-0775-01 | | | CAP,FXD,CER DI:0.1UF,20%,50V | 04222 | SA105E104MAA |
| A7C504 | 281-0775-01 | | | CAP,FXD,CER DI:0.1UF,20%,50V | 04222 | SA105E104MAA |
| A7C507 | 281-0775-01 | | | CAP,FXD,CER DI:0.1UF,20%,50V | 04222 | SA105E104MAA |
| A7C510 | 281-0775-01 | | | CAP,FXD,CER DI:0.1UF,20%,50V | 04222 | SA105E104MAA |
| A7C513 | 281-0775-01 | | | CAP,FXD,CER DI:0.1UF,20%,50V | 04222 | SA105E104MAA |
| A7C516 | 281-0775-01 | | | CAP,FXD,CER DI:0.1UF,20%,50V | 04222 | SA105E104MAA |
| A7C519 | 281-0775-01 | | | CAP,FXD,CER DI:0.1UF,20%,50V | 04222 | SA105E104MAA |
| A7C522 | 281-0775-01 | | | CAP,FXD,CER DI:0.1UF,20%,50V | 04222 | SA105E104MAA |
| A7C526 | 281-0775-01 | | | CAP,FXD,CER DI:0.1UF,20%,50V | 04222 | SA105E104MAA |
| A7C530 | 281-0775-01 | | | CAP,FXD,CER DI:0.1UF,20%,50V | 04222 | SA105E104MAA |
| A7C534 | 281-0775-01 | | | CAP,FXD,CER DI:0.1UF,20%,50V | 04222 | SA105E104MAA |
| A7C538 | 281-0814-00 | | | CAP,FXD,CER DI:100 PF,10%,100V | 80009 | 281-0814-00 |
| A7C601 | 281-0814-00 | | | CAP,FXD,CER DI:100 PF,10%,100V | 80009 | 281-0814-00 |
| A7C630 | 281-0775-01 | | | CAP,FXD,CER DI:0.1UF,20%,50V | 04222 | SA105E104MAA |
| A7C634 | 281-0775-01 | | | CAP,FXD,CER DI:0.1UF,20%,50V | 04222 | SA105E104MAA |
| A7C638 | 281-0775-01 | | | CAP,FXD,CER DI:0.1UF,20%,50V | 04222 | SA105E104MAA |
| A7C641 | 281-0775-01 | | | CAP,FXD,CER DI:0.1UF,20%,50V | 04222 | SA105E104MAA |
| A7C644 | 281-0775-01 | | | CAP,FXD,CER DI:0.1UF,20%,50V | 04222 | SA105E104MAA |
| A7C647 | 281-0775-01 | | | CAP,FXD,CER DI:0.1UF,20%,50V | 04222 | SA105E104MAA |
| A7C650 | 281-0775-01 | | | CAP,FXD,CER DI:0.1UF,20%,50V | 04222 | SA105E104MAA |
| A7C652 | 281-0775-01 | | | CAP,FXD,CER DI:0.1UF,20%,50V | 04222 | SA105E104MAA |
| A7C655 | 281-0775-01 | | | CAP,FXD,CER DI:0.1UF,20%,50V | 04222 | SA105E104MAA |
| A7C658 | 281-0775-01 | | | CAP,FXD,CER DI:0.1UF,20%,50V | 04222 | SA105E104MAA |
| A7C701 | 281-0775-01 | | | CAP,FXD,CER DI:0.1UF,20%,50V | 04222 | SA105E104MAA |
| A7C702 | 281-0814-00 | | | CAP,FXD,CER DI:100 PF,10%,100V | 80009 | 281-0814-00 |
| A7C704 | 281-0775-01 | | | CAP,FXD,CER DI:0.1UF,20%,50V | 04222 | SA105E104MAA |
| A7C707 | 281-0775-01 | | | CAP,FXD,CER DI:0.1UF,20%,50V | 04222 | SA105E104MAA |
| A7C710 | 281-0775-01 | | | CAP,FXD,CER DI:0.1UF,20%,50V | 04222 | SA105E104MAA |
| A7C713 | 281-0775-01 | | | CAP,FXD,CER DI:0.1UF,20%,50V | 04222 | SA105E104MAA |
| A7C716 | 281-0775-01 | | | CAP,FXD,CER DI:0.1UF,20%,50V | 04222 | SA105E104MAA |
| A7C719 | 281-0775-01 | | | CAP,FXD,CER DI:0.1UF,20%,50V | 04222 | SA105E104MAA |
| A7C722 | 281-0775-01 | | | CAP,FXD,CER DI:0.1UF,20%,50V | 04222 | SA105E104MAA |
| A7C738 | 281-0814-00 | | | CAP,FXD,CER DI:100 PF,10%,100V | 80009 | 281-0814-00 |
| A7C762 | 281-0775-01 | | | CAP,FXD,CER DI:0.1UF,20%,50V | 04222 | SA105E104MAA |
| A7C766 | 281-0775-01 | | | CAP,FXD,CER DI:0.1UF,20%,50V | 04222 | SA105E104MAA |
| A7C767 | 281-0775-01 | | | CAP,FXD,CER DI:0.1UF,20%,50V | 04222 | SA105E104MAA |
| A7C770 | 281-0775-01 | | | CAP,FXD,CER DI:0.1UF,20%,50V | 04222 | SA105E104MAA |
| A7C772 | 281-0775-01 | | | CAP,FXD,CER DI:0.1UF,20%,50V | 04222 | SA105E104MAA |
| A7C776 | 281-0775-01 | | | CAP,FXD,CER DI:0.1UF,20%,50V | 04222 | SA105E104MAA |
| A7C777 | 281-0775-01 | | | CAP,FXD,CER DI:0.1UF,20%,50V | 04222 | SA105E104MAA |
| A7C782 | 281-0775-01 | | | CAP,FXD,CER DI:0.1UF,20%,50V | 04222 | SA105E104MAA |
| A7C790 | 281-0775-01 | | | CAP,FXD,CER DI:0.1UF,20%,50V | 04222 | SA105E104MAA |
| A7C795 | 281-0775-01 | | | CAP,FXD,CER DI:0.1UF,20%,50V | 04222 | SA105E104MAA |
| A7C841 | 281-0775-01 | | | CAP,FXD,CER DI:0.1UF,20%,50V | 04222 | SA105E104MAA |
| A7C850 | 281-0775-01 | | | CAP,FXD,CER DI:0.1UF,20%,50V | 04222 | SA105E104MAA |
| A7C860 | 281-0775-01 | | | CAP,FXD,CER DI:0.1UF,20%,50V | 04222 | SA105E104MAA |
| A7C866 | 281-0775-01 | | | CAP,FXD,CER DI:0.1UF,20%,50V | 04222 | SA105E104MAA |
| A7C872 | 281-0775-01 | | | CAP,FXD,CER DI:0.1UF,20%,50V | 04222 | SA105E104MAA |
| A7C879 | 281-0775-01 | | | CAP,FXD,CER DI:0.1UF,20%,50V | 04222 | SA105E104MAA |
| A7C890 | 281-0775-01 | | | CAP,FXD,CER DI:0.1UF,20%,50V | 04222 | SA105E104MAA |
| A7C908 | 281-0775-01 | | | CAP,FXD,CER DI:0.1UF,20%,50V | 04222 | SA105E104MAA |
| A7C917 | 281-0775-01 | | | CAP,FXD,CER DI:0.1UF,20%,50V | 04222 | SA105E104MAA |

| Component No. | Tektronix Part No. | Serial/Assembly No. Effective | Dscont | Name & Description | Mfr. Code | Mfr. Part No. |
|---|---|---|---|---|---|---|
| A7C935 | 281-0775-01 | | | CAP,FXD,CER DI:0.1UF,20%,50V | 04222 | SA105E104MAA |
| A7C960 | 281-0775-01 | | | CAP,FXD,CER DI:0.1UF,20%,50V | 04222 | SA105E104MAA |
| A7C966 | 281-0775-01 | | | CAP,FXD,CER DI:0.1UF,20%,50V | 04222 | SA105E104MAA |
| A7C972 | 281-0775-01 | | | CAP,FXD,CER DI:0.1UF,20%,50V | 04222 | SA105E104MAA |
| A7C985 | 281-0775-01 | | | CAP,FXD,CER DI:0.1UF,20%,50V | 04222 | SA105E104MAA |
| A7C992 | 281-0775-01 | | | CAP,FXD,CER DI:0.1UF,20%,50V | 04222 | SA105E104MAA |
| A7DL191 | 119-2705-00 | | | DELAY LINE,DATA:20NS,4 TAPS,5NS EACH,DIP8 T TL | 22519 | DDU-8-5020 |
| A7DL768 | 119-2705-00 | | | DELAY LINE,DATA:20NS,4 TAPS,5NS EACH,DIP8 T TL | 22519 | DDU-8-5020 |
| A7F939 | 159-0193-00 | | | FUSE,WIRE LEAD:10A,125V,5 SEC | 61857 | SP5-10A |
| A7J271 | 131-1465-01 | | | CONN,HDR: | 80009 | 131-1465-01 |
| | | | | *MOUNTING PARTS* | | |
| | 210-0001-00 | | | WASHER,LOCK:#2 INTL,0.013 THK,STL (QUANTITY 2) | 77900 | 1202-00-00-0541C |
| | 210-0405-00 | | | NUT,PLAIN,HEX:2-56 X 0.188,BRS CD PL (QUANTITY 2) | 73743 | 12157-50 |
| | 211-0185-00 | | | SCREW,MACHINE:2-56 X 0.438,PNH,STL (QUANTITY 2) | TK0435 | ORDER BY DESCR |
| | | | | *END MOUNTING PARTS* | | |
| A7J926 | 131-3517-00 | | | CONN,DIN:PCB,;FEMALE,RTANG,3 X 50,0.1 CTR,0 .504 MLG X 0.118 TAIL,30 GOLD;,, | 80009 | 131-3517-00 |
| | | | | *MOUNTING PARTS* | | |
| | 210-0001-00 | | | WASHER,LOCK:#2 INTL,0.013 THK,STL (QUANTITY 2) | 77900 | 1202-00-00-0541C |
| | 210-0405-00 | | | NUT,PLAIN,HEX:2-56 X 0.188,BRS CD PL (QUANTITY 2) | 73743 | 12157-50 |
| | 211-0185-00 | | | SCREW,MACHINE:2-56 X 0.438,PNH,STL (QUANTITY 2) | TK0435 | ORDER BY DESCR |
| | | | | *END MOUNTING PARTS* | | |
| A7R124 | 307-0828-00 | | | RES NTWK,FXD,FI:4,33 OHM,2%,0.30W | 32997 | 4308R-102-330 |
| A7R201 | 322-3097-00 | | | RES,FXD:METAL FILM;100 OHM,1%,0.2W,TC=100 P PM;AXIAL,T&R,SMALL BODY | 57668 | CRB20 FXE 100E |
| A7R222 | 322-3097-00 | | | RES,FXD:METAL FILM;100 OHM,1%,0.2W,TC=100 P PM;AXIAL,T&R,SMALL BODY | 57668 | CRB20 FXE 100E |
| A7R238 | 322-3097-00 | | | RES,FXD:METAL FILM;100 OHM,1%,0.2W,TC=100 P PM;AXIAL,T&R,SMALL BODY | 57668 | CRB20 FXE 100E |
| A7R324 | 307-0828-00 | | | RES NTWK,FXD,FI:4,33 OHM,2%,0.30W | 32997 | 4308R-102-330 |
| A7R338 | 322-3097-00 | | | RES,FXD:METAL FILM;100 OHM,1%,0.2W,TC=100 P PM;AXIAL,T&R,SMALL BODY | 57668 | CRB20 FXE 100E |
| A7R401 | 322-3097-00 | | | RES,FXD:METAL FILM;100 OHM,1%,0.2W,TC=100 P PM;AXIAL,T&R,SMALL BODY | 57668 | CRB20 FXE 100E |
| A7R524 | 307-0828-00 | | | RES NTWK,FXD,FI:4,33 OHM,2%,0.30W | 32997 | 4308R-102-330 |
| A7R538 | 322-3097-00 | | | RES,FXD:METAL FILM;100 OHM,1%,0.2W,TC=100 P PM;AXIAL,T&R,SMALL BODY | 57668 | CRB20 FXE 100E |
| A7R601 | 322-3097-00 | | | RES,FXD:METAL FILM;100 OHM,1%,0.2W,TC=100 P PM;AXIAL,T&R,SMALL BODY | 57668 | CRB20 FXE 100E |
| A7R624 | 307-0828-00 | | | RES NTWK,FXD,FI:4,33 OHM,2%,0.30W | 32997 | 4308R-102-330 |
| A7R701 | 322-3097-00 | | | RES,FXD:METAL FILM;100 OHM,1%,0.2W,TC=100 P PM;AXIAL,T&R,SMALL BODY | 57668 | CRB20 FXE 100E |
| A7R738 | 322-3097-00 | | | RES,FXD:METAL FILM;100 OHM,1%,0.2W,TC=100 P PM;AXIAL,T&R,SMALL BODY | 57668 | CRB20 FXE 100E |
| A7R943 | 307-0445-00 | | | RES,NTWK:THICK FILM;(9) 4.7K OHM,2%,0.2W EA CH,TC=100 PPM;SIP10,PIN 1 COMMON | 91637 | MSP10A01472GD03 |
| A7S941 | 260-1721-00 | | | SWITCH,ROCKER:8,SPST,125MA,30VDC | 81073 | 76SB08S |
| A7U134 | 156-1935-00 | | | IC,DIGITAL:FTTL,COUNTER;SYNCH 4-BIT BINARY; 74F163,DIP16.3,TUBE | 80009 | 156-1935-00 |
| A7U186 | 156-3123-00 | 671-1306-00 | 671-1306-00 | IC,DIGITAL:ASTTL,FLIP FLOP;DUAL J-K, PRESET , CLEAR;74AS109,DIP16.3,TUBE | 80009 | 156-3123-00 |
| A7U186 | 156-3834-00 | 671-1306-01 | | IC,DIGITAL: | 80009 | 156-3834-00 |

| Component No. | Tektronix Part No. | Serial/Assembly No. Effective | Dscont | Name & Description | Mfr. Code | Mfr. Part No. |
|---|---|---|---|---|---|---|
| A7U201 | 156-3231-00 | | | IC,MEMORY:CMOS,SRAM;16K X 4,35NS;,DIP22.3 | 80009 | 156-3231-00 |
| A7U204 | 156-3231-00 | | | IC,MEMORY:CMOS,SRAM;16K X 4,35NS;,DIP22.3 | 80009 | 156-3231-00 |
| A7U207 | 156-3231-00 | | | IC,MEMORY:CMOS,SRAM;16K X 4,35NS;,DIP22.3 | 80009 | 156-3231-00 |
| A7U210 | 156-3231-00 | | | IC,MEMORY:CMOS,SRAM;16K X 4,35NS;,DIP22.3 | 80009 | 156-3231-00 |
| A7U213 | 156-3231-00 | | | IC,MEMORY:CMOS,SRAM;16K X 4,35NS;,DIP22.3 | 80009 | 156-3231-00 |
| A7U216 | 156-3231-00 | | | IC,MEMORY:CMOS,SRAM;16K X 4,35NS;,DIP22.3 | 80009 | 156-3231-00 |
| A7U219 | 156-3231-00 | | | IC,MEMORY:CMOS,SRAM;16K X 4,35NS;,DIP22.3 | 80009 | 156-3231-00 |
| A7U222 | 156-3231-00 | | | IC,MEMORY:CMOS,SRAM;16K X 4,35NS;,DIP22.3 | 80009 | 156-3231-00 |
| A7U226 | 156-3851-00 | | | IC,DIGITAL:FCTCMOS,BUFFER;10-BIT;74FCT827B, DIP24.3,TUBE | 80009 | 156-3851-00 |
| A7U230 | 156-3851-00 | | | IC,DIGITAL:FCTCMOS,BUFFER;10-BIT;74FCT827B, DIP24.3,TUBE | 80009 | 156-3851-00 |
| A7U238 | 156-3231-00 | | | IC,MEMORY:CMOS,SRAM;16K X 4,35NS;,DIP22.3 | 80009 | 156-3231-00 |
| A7U241 | 156-3231-00 | | | IC,MEMORY:CMOS,SRAM;16K X 4,35NS;,DIP22.3 | 80009 | 156-3231-00 |
| A7U244 | 156-3231-00 | | | IC,MEMORY:CMOS,SRAM;16K X 4,35NS;,DIP22.3 | 80009 | 156-3231-00 |
| A7U247 | 156-3231-00 | | | IC,MEMORY:CMOS,SRAM;16K X 4,35NS;,DIP22.3 | 80009 | 156-3231-00 |
| A7U250 | 156-3231-00 | | | IC,MEMORY:CMOS,SRAM;16K X 4,35NS;,DIP22.3 | 80009 | 156-3231-00 |
| A7U252 | 156-3231-00 | | | IC,MEMORY:CMOS,SRAM;16K X 4,35NS;,DIP22.3 | 80009 | 156-3231-00 |
| A7U255 | 156-3231-00 | | | IC,MEMORY:CMOS,SRAM;16K X 4,35NS;,DIP22.3 | 80009 | 156-3231-00 |
| A7U258 | 156-3231-00 | | | IC,MEMORY:CMOS,SRAM;16K X 4,35NS;,DIP22.3 | 80009 | 156-3231-00 |
| A7U334 | 156-1935-00 | | | IC,DIGITAL:FTTL,COUNTER;SYNCH 4-BIT BINARY; 74F163,DIP16.3,TUBE | 80009 | 156-1935-00 |
| A7U338 | 156-3231-00 | | | IC,MEMORY:CMOS,SRAM;16K X 4,35NS;,DIP22.3 | 80009 | 156-3231-00 |
| A7U341 | 156-3231-00 | | | IC,MEMORY:CMOS,SRAM;16K X 4,35NS;,DIP22.3 | 80009 | 156-3231-00 |
| A7U344 | 156-3231-00 | | | IC,MEMORY:CMOS,SRAM;16K X 4,35NS;,DIP22.3 | 80009 | 156-3231-00 |
| A7U347 | 156-3231-00 | | | IC,MEMORY:CMOS,SRAM;16K X 4,35NS;,DIP22.3 | 80009 | 156-3231-00 |
| A7U350 | 156-3231-00 | | | IC,MEMORY:CMOS,SRAM;16K X 4,35NS;,DIP22.3 | 80009 | 156-3231-00 |
| A7U352 | 156-3231-00 | | | IC,MEMORY:CMOS,SRAM;16K X 4,35NS;,DIP22.3 | 80009 | 156-3231-00 |
| A7U355 | 156-3231-00 | | | IC,MEMORY:CMOS,SRAM;16K X 4,35NS;,DIP22.3 | 80009 | 156-3231-00 |
| A7U358 | 156-3231-00 | | | IC,MEMORY:CMOS,SRAM;16K X 4,35NS;,DIP22.3 | 80009 | 156-3231-00 |
| A7U363 | 156-3375-00 | | | IC,MEMORY:CMOS,SRAM;16 X 4,,DUAL PORT;,DIP2 8.6 | 80009 | 156-3375-00 |
| A7U368 | 156-3375-00 | | | IC,MEMORY:CMOS,SRAM;16 X 4,,DUAL PORT;,DIP2 8.6 | 80009 | 156-3375-00 |
| A7U373 | 156-3375-00 | | | IC,MEMORY:CMOS,SRAM;16 X 4,,DUAL PORT;,DIP2 8.6 | 80009 | 156-3375-00 |
| A7U378 | 156-3375-00 | | | IC,MEMORY:CMOS,SRAM;16 X 4,,DUAL PORT;,DIP2 8.6 | 80009 | 156-3375-00 |
| A7U383 | 156-3741-00 | | | MICROCKT,DGTL:SYNCHRONIUS COMMULATIVE 10 BI T MIN-MAX STORE | 80009 | 156-3741-00 |
| | | | | *MOUNTING PARTS* | | |
| | 136-0757-00 | | | SOCKET,DIP: | 09922 | DILB40P-108 |
| | | | | *END MOUNTING PARTS* | | |
| A7U390 | 160-5113-00 | 671-1306-00 | 671-1306-00 | IC,DIGITAL:CMOS,PLD;EEPLD,16V8,25NS,90MA,PR GM 156-2983-00;16V8-25,DIP20.3 | 80009 | 160-5113-00 |
| A7U390 | 160-5113-01 | 671-1306-01 | | MICROCKT,DGTL:CMOS,PLD,16 IN,8 OUT,REGESTER ED,GAL,10NS,16V8A-10,DIP20.3 | 80009 | 160-5113-01 |
| | | | | *MOUNTING PARTS* | | |
| | 136-0752-00 | | | SKT,PL-IN ELEK:MICROCIRCUIT,20 DIP | 09922 | DILB20P-108 |
| | | | | *END MOUNTING PARTS* | | |
| A7U401 | 156-3231-00 | | | IC,MEMORY:CMOS,SRAM;16K X 4,35NS;,DIP22.3 | 80009 | 156-3231-00 |
| A7U404 | 156-3231-00 | | | IC,MEMORY:CMOS,SRAM;16K X 4,35NS;,DIP22.3 | 80009 | 156-3231-00 |
| A7U407 | 156-3231-00 | | | IC,MEMORY:CMOS,SRAM;16K X 4,35NS;,DIP22.3 | 80009 | 156-3231-00 |
| A7U410 | 156-3231-00 | | | IC,MEMORY:CMOS,SRAM;16K X 4,35NS;,DIP22.3 | 80009 | 156-3231-00 |
| A7U413 | 156-3231-00 | | | IC,MEMORY:CMOS,SRAM;16K X 4,35NS;,DIP22.3 | 80009 | 156-3231-00 |
| A7U416 | 156-3231-00 | | | IC,MEMORY:CMOS,SRAM;16K X 4,35NS;,DIP22.3 | 80009 | 156-3231-00 |
| A7U419 | 156-3231-00 | | | IC,MEMORY:CMOS,SRAM;16K X 4,35NS;,DIP22.3 | 80009 | 156-3231-00 |
| A7U422 | 156-3231-00 | | | IC,MEMORY:CMOS,SRAM;16K X 4,35NS;,DIP22.3 | 80009 | 156-3231-00 |
| A7U426 | 156-3851-00 | | | IC,DIGITAL:FCTCMOS,BUFFER;10-BIT;74FCT827B, DIP24.3,TUBE | 80009 | 156-3851-00 |

| Component No. | Tektronix Part No. | Serial/Assembly No. Effective | Dscont | Name & Description | Mfr. Code | Mfr. Part No. |
|---|---|---|---|---|---|---|
| A7U430 | 156-3851-00 | | | IC,DIGITAL:FCTCMOS,BUFFER;10-BIT;74FCT827B, DIP24.3,TUBE | 80009 | 156-3851-00 |
| A7U434 | 156-1935-00 | | | IC,DIGITAL:FTTL,COUNTER;SYNCH 4-BIT BINARY; 74F163,DIP16.3,TUBE | 80009 | 156-1935-00 |
| A7U538 | 156-3231-00 | | | IC,MEMORY:CMOS,SRAM;16K X 4,35NS;,DIP22.3 | 80009 | 156-3231-00 |
| A7U541 | 156-3231-00 | | | IC,MEMORY:CMOS,SRAM;16K X 4,35NS;,DIP22.3 | 80009 | 156-3231-00 |
| A7U544 | 156-3231-00 | | | IC,MEMORY:CMOS,SRAM;16K X 4,35NS;,DIP22.3 | 80009 | 156-3231-00 |
| A7U547 | 156-3231-00 | | | IC,MEMORY:CMOS,SRAM;16K X 4,35NS;,DIP22.3 | 80009 | 156-3231-00 |
| A7U550 | 156-3231-00 | | | IC,MEMORY:CMOS,SRAM;16K X 4,35NS;,DIP22.3 | 80009 | 156-3231-00 |
| A7U552 | 156-3231-00 | | | IC,MEMORY:CMOS,SRAM;16K X 4,35NS;,DIP22.3 | 80009 | 156-3231-00 |
| A7U555 | 156-3231-00 | | | IC,MEMORY:CMOS,SRAM;16K X 4,35NS;,DIP22.3 | 80009 | 156-3231-00 |
| A7U558 | 156-3231-00 | | | IC,MEMORY:CMOS,SRAM;16K X 4,35NS;,DIP22.3 | 80009 | 156-3231-00 |
| A7U601 | 156-3231-00 | | | IC,MEMORY:CMOS,SRAM;16K X 4,35NS;,DIP22.3 | 80009 | 156-3231-00 |
| A7U604 | 156-3231-00 | | | IC,MEMORY:CMOS,SRAM;16K X 4,35NS;,DIP22.3 | 80009 | 156-3231-00 |
| A7U607 | 156-3231-00 | | | IC,MEMORY:CMOS,SRAM;16K X 4,35NS;,DIP22.3 | 80009 | 156-3231-00 |
| A7U610 | 156-3231-00 | | | IC,MEMORY:CMOS,SRAM;16K X 4,35NS;,DIP22.3 | 80009 | 156-3231-00 |
| A7U613 | 156-3231-00 | | | IC,MEMORY:CMOS,SRAM;16K X 4,35NS;,DIP22.3 | 80009 | 156-3231-00 |
| A7U616 | 156-3231-00 | | | IC,MEMORY:CMOS,SRAM;16K X 4,35NS;,DIP22.3 | 80009 | 156-3231-00 |
| A7U619 | 156-3231-00 | | | IC,MEMORY:CMOS,SRAM;16K X 4,35NS;,DIP22.3 | 80009 | 156-3231-00 |
| A7U622 | 156-3231-00 | | | IC,MEMORY:CMOS,SRAM;16K X 4,35NS;,DIP22.3 | 80009 | 156-3231-00 |
| A7U626 | 156-3121-00 | | | IC,DIGITAL:FCTCMOS,FLIP FLOP;10-BIT D-TYPE, 3-STATE;74FCT821B,DIP24.3,TUBE | 80009 | 156-3121-00 |
| A7U630 | 156-3121-00 | | | IC,DIGITAL:FCTCMOS,FLIP FLOP;10-BIT D-TYPE, 3-STATE;74FCT821B,DIP24.3,TUBE | 80009 | 156-3121-00 |
| A7U634 | 156-1935-00 | | | IC,DIGITAL:FTTL,COUNTER;SYNCH 4-BIT BINARY; 74F163,DIP16.3,TUBE | 80009 | 156-1935-00 |
| A7U663 | 156-3375-00 | | | IC,MEMORY:CMOS,SRAM;16 X 4,,DUAL PORT;,DIP28.6 | 80009 | 156-3375-00 |
| A7U668 | 156-3375-00 | | | IC,MEMORY:CMOS,SRAM;16 X 4,,DUAL PORT;,DIP28.6 | 80009 | 156-3375-00 |
| A7U673 | 156-3375-00 | | | IC,MEMORY:CMOS,SRAM;16 X 4,,DUAL PORT;,DIP28.6 | 80009 | 156-3375-00 |
| A7U678 | 156-3375-00 | | | IC,MEMORY:CMOS,SRAM;16 X 4,,DUAL PORT;,DIP28.6 | 80009 | 156-3375-00 |
| A7U701 | 156-3231-00 | | | IC,MEMORY:CMOS,SRAM;16K X 4,35NS;,DIP22.3 | 80009 | 156-3231-00 |
| A7U704 | 156-3231-00 | | | IC,MEMORY:CMOS,SRAM;16K X 4,35NS;,DIP22.3 | 80009 | 156-3231-00 |
| A7U707 | 156-3231-00 | | | IC,MEMORY:CMOS,SRAM;16K X 4,35NS;,DIP22.3 | 80009 | 156-3231-00 |
| A7U710 | 156-3231-00 | | | IC,MEMORY:CMOS,SRAM;16K X 4,35NS;,DIP22.3 | 80009 | 156-3231-00 |
| A7U713 | 156-3231-00 | | | IC,MEMORY:CMOS,SRAM;16K X 4,35NS;,DIP22.3 | 80009 | 156-3231-00 |
| A7U716 | 156-3231-00 | | | IC,MEMORY:CMOS,SRAM;16K X 4,35NS;,DIP22.3 | 80009 | 156-3231-00 |
| A7U719 | 156-3231-00 | | | IC,MEMORY:CMOS,SRAM;16K X 4,35NS;,DIP22.3 | 80009 | 156-3231-00 |
| A7U722 | 156-3231-00 | | | IC,MEMORY:CMOS,SRAM;16K X 4,35NS;,DIP22.3 | 80009 | 156-3231-00 |
| A7U726 | 156-3121-00 | | | IC,DIGITAL:FCTCMOS,FLIP FLOP;10-BIT D-TYPE, 3-STATE;74FCT821B,DIP24.3,TUBE | 80009 | 156-3121-00 |
| A7U730 | 156-3121-00 | | | IC,DIGITAL:FCTCMOS,FLIP FLOP;10-BIT D-TYPE, 3-STATE;74FCT821B,DIP24.3,TUBE | 80009 | 156-3121-00 |
| A7U734 | 156-1935-00 | | | IC,DIGITAL:FTTL,COUNTER;SYNCH 4-BIT BINARY; 74F163,DIP16.3,TUBE | 80009 | 156-1935-00 |
| A7U738 | 156-3231-00 | | | IC,MEMORY:CMOS,SRAM;16K X 4,35NS;,DIP22.3 | 80009 | 156-3231-00 |
| A7U741 | 156-3231-00 | | | IC,MEMORY:CMOS,SRAM;16K X 4,35NS;,DIP22.3 | 80009 | 156-3231-00 |
| A7U744 | 156-3231-00 | | | IC,MEMORY:CMOS,SRAM;16K X 4,35NS;,DIP22.3 | 80009 | 156-3231-00 |
| A7U747 | 156-3231-00 | | | IC,MEMORY:CMOS,SRAM;16K X 4,35NS;,DIP22.3 | 80009 | 156-3231-00 |
| A7U750 | 156-3231-00 | | | IC,MEMORY:CMOS,SRAM;16K X 4,35NS;,DIP22.3 | 80009 | 156-3231-00 |
| A7U752 | 156-3231-00 | | | IC,MEMORY:CMOS,SRAM;16K X 4,35NS;,DIP22.3 | 80009 | 156-3231-00 |
| A7U755 | 156-3231-00 | | | IC,MEMORY:CMOS,SRAM;16K X 4,35NS;,DIP22.3 | 80009 | 156-3231-00 |
| A7U758 | 156-3231-00 | | | IC,MEMORY:CMOS,SRAM;16K X 4,35NS;,DIP22.3 | 80009 | 156-3231-00 |
| A7U763 | 156-3123-00 | | | IC,DIGITAL:ASTTL,FLIP FLOP;DUAL J-K, PRESET , CLEAR;74AS109,DIP16.3,TUBE | 80009 | 156-3123-00 |

| Component No. | Tektronix Part No. | Serial/Assembly No. Effective | Dscont | Name & Description | Mfr. Code | Mfr. Part No. |
|---|---|---|---|---|---|---|
| A7U773 | 156-3154-00 | | | IC,DIGITAL:ACTCMOS,GATE;TRIPLE 3-INPUT NAND ;74ACT11010,DIP16.3,TUBE | 80009 | 156-3154-00 |
| A7U779 | 156-1997-00 | | | IC,DIGITAL:FTTL,MUX;QUAD 2-TO-1 DATA SELECT OR, INV;74F158,DIP16.3,TUBE | 04713 | MC74F158 ND/JD |
| A7U785 | 160-5112-00 | | | MICROCKT,DGTL:CMOS,1K X 8 RGTR PROM,PRGM | 80009 | 160-5112-00 |
| | | | | *MOUNTING PARTS* | | |
| | 136-0925-00 | | | SOCKET,DIP:: | 91506 | 224-AG30D |
| | | | | *END MOUNTING PARTS* | | |
| A7U786 | 156-3120-00 | | | IC,DIGITAL:FCTCMOS,FLIP FLOP;OCTAL D-TYPE, 3-STATE;74FCT374A,DIP20.3,TUBE | 80009 | 156-3120-00 |
| A7U795 | 156-2339-00 | | | IC,DIGITAL:ASTTL,GATE;QUAD 2-INPUT OR;74AS32,DIP14.3,TUBE | 80009 | 156-2339-00 |
| A7U847 | 156-1727-00 | | | MICROCKT,DGTL:1 OF 8 DCDR/DEMULTIPLEXER | 04713 | MC74F138 N |
| A7U856 | 156-3120-00 | | | IC,DIGITAL:FCTCMOS,FLIP FLOP;OCTAL D-TYPE, 3-STATE;74FCT374A,DIP20.3,TUBE | 80009 | 156-3120-00 |
| A7U863 | 156-3123-00 | | | IC,DIGITAL:ASTTL,FLIP FLOP;DUAL J-K, PRESET , CLEAR;74AS109,DIP16.3,TUBE | 80009 | 156-3123-00 |
| A7U876 | 156-2339-00 | | | IC,DIGITAL:ASTTL,GATE;QUAD 2-INPUT OR;74AS32,DIP14.3,TUBE | 80009 | 156-2339-00 |
| A7U886 | 156-3121-00 | | | IC,DIGITAL:FCTCMOS,FLIP FLOP;10-BIT D-TYPE, 3-STATE;74FCT821B,DIP24.3,TUBE | 80009 | 156-3121-00 |
| A7U895 | 156-3121-00 | | | IC,DIGITAL:FCTCMOS,FLIP FLOP;10-BIT D-TYPE, 3-STATE;74FCT821B,DIP24.3,TUBE | 80009 | 156-3121-00 |
| A7U904 | 156-2236-00 | | | IC,DIGITAL:ASTTL,TRANSCEIVER;OCTAL, WITH REGISTER, NONINV, 3-STATE;74AS652,DIP24.3,TUBE | 80009 | 156-2236-00 |
| A7U913 | 156-2236-00 | | | IC,DIGITAL:ASTTL,TRANSCEIVER;OCTAL, WITH REGISTER, NONINV, 3-STATE;74AS652,DIP24.3,TUBE | 80009 | 156-2236-00 |
| A7U922 | 156-2236-00 | | | IC,DIGITAL:ASTTL,TRANSCEIVER;OCTAL, WITH REGISTER, NONINV, 3-STATE;74AS652,DIP24.3,TUBE | 80009 | 156-2236-00 |
| A7U931 | 156-2236-00 | | | IC,DIGITAL:ASTTL,TRANSCEIVER;OCTAL, WITH REGISTER, NONINV, 3-STATE;74AS652,DIP24.3,TUBE | 80009 | 156-2236-00 |
| A7U938 | 156-0441-00 | | | IC,DIGITAL:FTTL,COMPARATOR;8-BIT IDENTITY, /P=/Q, STANDARD;74F521,DIP20.3,TUBE | 80009 | 156-0441-00 |
| A7U956 | 160-5115-00 | | | IC,DIGITAL:CMOS,PLD;EEPLD,16V8,25NS,90MA,PRGM 156-2983-00;16V8-25,DIP20.3 | 80009 | 160-5115-00 |
| | | | | *MOUNTING PARTS* | | |
| | 136-0752-00 | | | SKT,PL-IN ELEK:MICROCIRCUIT,20 DIP | 09922 | DILB20P-108 |
| | | | | *END MOUNTING PARTS* | | |
| A7U963 | 156-3123-00 | | | IC,DIGITAL:ASTTL,FLIP FLOP;DUAL J-K, PRESET , CLEAR;74AS109,DIP16.3,TUBE | 80009 | 156-3123-00 |
| A7U969 | 156-1722-00 | | | IC,DIGITAL:FTTL,GATE;HEX INV;74F04,DIP14.3, TUBE | 04713 | MC74F04ND |
| A7U981 | 160-5116-00 | | | IC,DIGITAL:CMOS,PLD;EEPLD,16V8,25NS,90MA,PRGM 156-2983-00;16V8-25,DIP20.3 | 80009 | 160-5116-00 |
| | | | | *MOUNTING PARTS* | | |
| | 136-0752-00 | | | SKT.PL-IN ELEK:MICROCIRCUIT,20 DIP | 09922 | DILB20P-108 |
| | | | | *END MOUNTING PARTS* | | |
| A7U989 | 160-5117-00 | | | IC,DIGITAL:CMOS,PLD;EEPLD,16V8,25NS,90MA,PRGM 156-2983-00;16V8-25,DIP20.3 | 80009 | 160-5117-00 |
| | | | | *MOUNTING PARTS* | | |
| | 136-0752-00 | | | SKT,PL-IN ELEK:MICROCIRCUIT,20 DIP | 09922 | DILB20P-108 |
| | | | | *END MOUNTING PARTS* | | |
| A7U996 | 160-5118-00 | | | IC,DIGITAL:CMOS,PLD;EEPLD,16V8,25NS,90MA,PRGM 156-2983-00;16V8-25,DIP20.3 | 80009 | 160-5118-00 |
| | | | | *MOUNTING PARTS* | | |
| | 136-0752-00 | | | SKT,PL-IN ELEK:MICROCIRCUIT,20 DIP | 09922 | DILB20P-108 |
| | | | | *END MOUNTING PARTS* | | |

| Component No. | Tektronix Part No. | Serial/Assembly No. Effective | Dscont | Name & Description | Mfr. Code | Mfr. Part No. |
|---|---|---|---|---|---|---|
| A7Y869 | 119-2625-00 | | | OSCILLATOR,RF:11.0 MHZ, +/- 0.005 %, TTL, 4 PIN 14 PIN DIP COMPATIBL | 14301 | 012-405-02182 |

| Component No. | Tektronix Part No. | Serial/Assembly No. Effective | Dscont | Name & Description | Mfr. Code | Mfr. Part No. |
|---|---|---|---|---|---|---|
| A8 | 671-0534-03 | B022000 | B022149 | CIRCUIT BD ASSY:CONTROLLER | 80009 | 671-0534-03 |
| A8 | 671-0534-04 | B022150 | B022312 | CIRCUIT BD ASSY:CONTROLLER | 80009 | 671-0534-04 |
| A8 | 671-0534-05 | B022313 | B022765 | CIRCUIT BD ASSY:CONTROLLER | 80009 | 671-0534-05 |
| A8 | 671-0534-06 | B022766 | B030100 | CIRCUIT BD ASSY:CONTROLLER | 80009 | 671-0534-06 |
| | | | | *ATTACHED PARTS* | | |
| | 105-0160-00 | | | EJECTOR,CKT BD:WHITE PLASTIC (QUANTITY 2) | 80009 | 105-0160-00 |
| | 214-1337-00 | | | PIN,SPRING:0.25 L X 0.103 OD,STL CD PL (QUANTITY 2) | 000BK | ORDER BY DESCR |
| | | | | *END ATTACHED PARTS* | | |
| A8C110 | 281-0775-01 | | | CAP,FXD,CER DI:0.1UF,20%,50V | 04222 | SA105E104MAA |
| A8C115 | 281-0775-01 | | | CAP,FXD,CER DI:0.1UF,20%,50V | 04222 | SA105E104MAA |
| A8C140 | 281-0775-01 | | | CAP,FXD,CER DI:0.1UF,20%,50V | 04222 | SA105E104MAA |
| A8C145 | 281-0775-01 | | | CAP,FXD,CER DI:0.1UF,20%,50V | 04222 | SA105E104MAA |
| A8C150 | 281-0775-01 | | | CAP,FXD,CER DI:0.1UF,20%,50V | 04222 | SA105E104MAA |
| A8C152 | 281-0775-01 | | | CAP,FXD,CER DI:0.1UF,20%,50V | 04222 | SA105E104MAA |
| A8C154 | 281-0775-01 | | | CAP,FXD,CER DI:0.1UF,20%,50V | 04222 | SA105E104MAA |
| A8C155 | 290-1107-00 | | | CAP,FXD,ELCTLT:10UF,20%,50V | 80009 | 290-1107-00 |
| A8C164 | 290-0966-00 | | | CAP,FXD,ELCTLT:220UF,+50-20%,25V | 55680 | TLBIE221MAA |
| A8C166 | 281-0775-01 | | | CAP,FXD,CER DI:0.1UF,20%,50V | 04222 | SA105E104MAA |
| A8C170 | 281-0775-01 | | | CAP,FXD,CER DI:0.1UF,20%,50V | 04222 | SA105E104MAA |
| A8C180 | 281-0775-01 | | | CAP,FXD,CER DI:0.1UF,20%,50V | 04222 | SA105E104MAA |
| A8C230 | 281-0775-01 | | | CAP,FXD,CER DI:0.1UF,20%,50V | 04222 | SA105E104MAA |
| A8C235 | 281-0775-01 | | | CAP,FXD,CER DI:0.1UF,20%,50V | 04222 | SA105E104MAA |
| A8C240 | 281-0775-01 | | | CAP,FXD,CER DI:0.1UF,20%,50V | 04222 | SA105E104MAA |
| A8C250 | 281-0775-01 | | | CAP,FXD,CER DI:0.1UF,20%,50V | 04222 | SA105E104MAA |
| A8C254 | 283-0108-00 | | | CAP,FXD,CER DI:220PF,10%,200V | 04222 | SR152A221KAA |
| A8C256 | 283-0108-00 | | | CAP,FXD,CER DI:220PF,10%,200V | 04222 | SR152A221KAA |
| A8C258 | 283-0108-00 | | | CAP,FXD,CER DI:220PF,10%,200V | 04222 | SR152A221KAA |
| A8C259 | 281-0775-01 | | | CAP,FXD,CER DI:0.1UF,20%,50V | 04222 | SA105E104MAA |
| A8C260 | 281-0775-01 | | | CAP,FXD,CER DI:0.1UF,20%,50V | 04222 | SA105E104MAA |
| A8C262 | 281-0775-01 | | | CAP,FXD,CER DI:0.1UF,20%,50V | 04222 | SA105E104MAA |
| A8C280 | 281-0775-01 | | | CAP,FXD,CER DI:0.1UF,20%,50V | 04222 | SA105E104MAA |
| A8C285 | 281-0775-01 | | | CAP,FXD,CER DI:0.1UF,20%,50V | 04222 | SA105E104MAA |
| A8C330 | 281-0775-01 | | | CAP,FXD,CER DI:0.1UF,20%,50V | 04222 | SA105E104MAA |
| A8C340 | 281-0775-01 | | | CAP,FXD,CER DI:0.1UF,20%,50V | 04222 | SA105E104MAA |
| A8C356 | 281-0775-01 | | | CAP,FXD,CER DI:0.1UF,20%,50V | 04222 | SA105E104MAA |
| A8C360 | 281-0775-01 | | | CAP,FXD,CER DI:0.1UF,20%,50V | 04222 | SA105E104MAA |
| A8C364 | 281-0775-01 | | | CAP,FXD,CER DI:0.1UF,20%,50V | 04222 | SA105E104MAA |
| A8C380 | 281-0775-01 | | | CAP,FXD,CER DI:0.1UF,20%,50V | 04222 | SA105E104MAA |
| A8C385 | 281-0775-01 | | | CAP,FXD,CER DI:0.1UF,20%,50V | 04222 | SA105E104MAA |
| A8C430 | 281-0775-01 | | | CAP,FXD,CER DI:0.1UF,20%,50V | 04222 | SA105E104MAA |
| A8C440 | 281-0775-01 | | | CAP,FXD,CER DI:0.1UF,20%,50V | 04222 | SA105E104MAA |
| A8C450 | 281-0775-01 | | | CAP,FXD,CER DI:0.1UF,20%,50V | 04222 | SA105E104MAA |
| A8C452 | 281-0775-01 | | | CAP,FXD,CER DI:0.1UF,20%,50V | 04222 | SA105E104MAA |
| A8C460 | 281-0775-01 | | | CAP,FXD,CER DI:0.1UF,20%,50V | 04222 | SA105E104MAA |
| A8C470 | 281-0775-01 | | | CAP,FXD,CER DI:0.1UF,20%,50V | 04222 | SA105E104MAA |
| A8C530 | 281-0775-01 | | | CAP,FXD,CER DI:0.1UF,20%,50V | 04222 | SA105E104MAA |
| A8C535 | 281-0775-01 | | | CAP,FXD,CER DI:0.1UF,20%,50V | 04222 | SA105E104MAA |
| A8C540 | 281-0775-01 | | | CAP,FXD,CER DI:0.1UF,20%,50V | 04222 | SA105E104MAA |
| A8C542 | 281-0775-01 | | | CAP,FXD,CER DI:0.1UF,20%,50V | 04222 | SA105E104MAA |
| A8C550 | 281-0775-01 | | | CAP,FXD,CER DI:0.1UF,20%,50V | 04222 | SA105E104MAA |
| A8C552 | 281-0775-01 | | | CAP,FXD,CER DI:0.1UF,20%,50V | 04222 | SA105E104MAA |
| A8C554 | 281-0775-01 | | | CAP,FXD,CER DI:0.1UF,20%,50V | 04222 | SA105E104MAA |
| A8C556 | 281-0775-01 | | | CAP,FXD,CER DI:0.1UF,20%,50V | 04222 | SA105E104MAA |
| A8C560 | 281-0775-01 | | | CAP,FXD,CER DI:0.1UF,20%,50V | 04222 | SA105E104MAA |
| A8C562 | 281-0775-01 | | | CAP,FXD,CER DI:0.1UF,20%,50V | 04222 | SA105E104MAA |
| A8C570 | 281-0775-01 | | | CAP,FXD,CER DI:0.1UF,20%,50V | 04222 | SA105E104MAA |
| A8C572 | 281-0775-01 | | | CAP,FXD,CER DI:0.1UF,20%,50V | 04222 | SA105E104MAA |

| Component No. | Tektronix Part No. | Serial/Assembly No. Effective | Dscont | Name & Description | Mfr. Code | Mfr. Part No. |
|---|---|---|---|---|---|---|
| A8C580 | 281-0775-01 | | | CAP,FXD,CER DI:0.1UF,20%,50V | 04222 | SA105E104MAA |
| A8C582 | 281-0775-01 | | | CAP,FXD,CER DI:0.1UF,20%,50V | 04222 | SA105E104MAA |
| A8C586 | 281-0775-01 | | | CAP,FXD,CER DI:0.1UF,20%,50V | 04222 | SA105E104MAA |
| A8C630 | 281-0775-01 | | | CAP,FXD,CER DI:0.1UF,20%,50V | 04222 | SA105E104MAA |
| A8C640 | 281-0775-01 | | | CAP,FXD,CER DI:0.1UF,20%,50V | 04222 | SA105E104MAA |
| A8C650 | 281-0775-01 | | | CAP,FXD,CER DI:0.1UF,20%,50V | 04222 | SA105E104MAA |
| A8C652 | 281-0775-01 | | | CAP,FXD,CER DI:0.1UF,20%,50V | 04222 | SA105E104MAA |
| A8C660 | 281-0775-01 | | | CAP,FXD,CER DI:0.1UF,20%,50V | 04222 | SA105E104MAA |
| A8C670 | 281-0775-01 | | | CAP,FXD,CER DI:0.1UF,20%,50V | 04222 | SA105E104MAA |
| A8C680 | 281-0775-01 | | | CAP,FXD,CER DI:0.1UF,20%,50V | 04222 | SA105E104MAA |
| A8C688 | 281-0775-01 | | | CAP,FXD,CER DI:0.1UF,20%,50V | 04222 | SA105E104MAA |
| A8C730 | 281-0775-01 | | | CAP,FXD,CER DI:0.1UF,20%,50V | 04222 | SA105E104MAA |
| A8C735 | 281-0775-01 | | | CAP,FXD,CER DI:0.1UF,20%,50V | 04222 | SA105E104MAA |
| A8C740 | 281-0775-01 | | | CAP,FXD,CER DI:0.1UF,20%,50V | 04222 | SA105E104MAA |
| A8C745 | 281-0775-01 | | | CAP,FXD,CER DI:0.1UF,20%,50V | 04222 | SA105E104MAA |
| A8C750 | 281-0775-01 | | | CAP,FXD,CER DI:0.1UF,20%,50V | 04222 | SA105E104MAA |
| A8C752 | 281-0775-01 | | | CAP,FXD,CER DI:0.1UF,20%,50V | 04222 | SA105E104MAA |
| A8C755 | 281-0775-01 | | | CAP,FXD,CER DI:0.1UF,20%,50V | 04222 | SA105E104MAA |
| A8C758 | 281-0775-01 | | | CAP,FXD,CER DI:0.1UF,20%,50V | 04222 | SA105E104MAA |
| A8C760 | 281-0775-01 | | | CAP,FXD,CER DI:0.1UF,20%,50V | 04222 | SA105E104MAA |
| A8C765 | 281-0775-01 | | | CAP,FXD,CER DI:0.1UF,20%,50V | 04222 | SA105E104MAA |
| A8C770 | 281-0775-01 | | | CAP,FXD,CER DI:0.1UF,20%,50V | 04222 | SA105E104MAA |
| A8C775 | 281-0775-01 | | | CAP,FXD,CER DI:0.1UF,20%,50V | 04222 | SA105E104MAA |
| A8C780 | 281-0775-01 | | | CAP,FXD,CER DI:0.1UF,20%,50V | 04222 | SA105E104MAA |
| A8C785 | 281-0775-01 | | | CAP,FXD,CER DI:0.1UF,20%,50V | 04222 | SA105E104MAA |
| A8C786 | 290-0966-00 | | | CAP,FXD,ELCTLT:220UF,+50-20%,25V | 55680 | TLBIE221MAA |
| A8C788 | 281-0775-01 | | | CAP,FXD,CER DI:0.1UF,20%,50V | 04222 | SA105E104MAA |
| A8C789 | 281-0775-01 | | | CAP,FXD,CER DI:0.1UF,20%,50V | 04222 | SA105E104MAA |
| A8C830 | 281-0775-01 | | | CAP,FXD,CER DI:0.1UF,20%,50V | 04222 | SA105E104MAA |
| A8C840 | 281-0775-01 | | | CAP,FXD,CER DI:0.1UF,20%,50V | 04222 | SA105E104MAA |
| A8C842 | 281-0775-01 | | | CAP,FXD,CER DI:0.1UF,20%,50V | 04222 | SA105E104MAA |
| A8C844 | 281-0775-01 | | | CAP,FXD,CER DI:0.1UF,20%,50V | 04222 | SA105E104MAA |
| A8C850 | 281-0775-01 | | | CAP,FXD,CER DI:0.1UF,20%,50V | 04222 | SA105E104MAA |
| A8C855 | 281-0775-01 | | | CAP,FXD,CER DI:0.1UF,20%,50V | 04222 | SA105E104MAA |
| A8C860 | 281-0775-01 | | | CAP,FXD,CER DI:0.1UF,20%,50V | 04222 | SA105E104MAA |
| A8C864 | 281-0775-01 | | | CAP,FXD,CER DI:0.1UF,20%,50V | 04222 | SA105E104MAA |
| A8C868 | 281-0775-01 | | | CAP,FXD,CER DI:0.1UF,20%,50V | 04222 | SA105E104MAA |
| A8C870 | 281-0775-01 | | | CAP,FXD,CER DI:0.1UF,20%,50V | 04222 | SA105E104MAA |
| A8C885 | 281-0775-01 | | | CAP,FXD,CER DI:0.1UF,20%,50V | 04222 | SA105E104MAA |
| A8C888 | 281-0775-01 | | | CAP,FXD,CER DI:0.1UF,20%,50V | 04222 | SA105E104MAA |
| A8C940 | 281-0775-01 | | | CAP,FXD,CER DI:0.1UF,20%,50V | 04222 | SA105E104MAA |
| A8C942 | 281-0765-00 | | | CAP,FXD,CER DI:100PF,5%,100V | 04222 | SA102A101JAA |
| A8C944 | 281-0775-01 | | | CAP,FXD,CER DI:0.1UF,20%,50V | 04222 | SA105E104MAA |
| A8C946 | 281-0775-01 | | | CAP,FXD,CER DI:0.1UF,20%,50V | 04222 | SA105E104MAA |
| A8C955 | 281-0775-01 | | | CAP,FXD,CER DI:0.1UF,20%,50V | 04222 | SA105E104MAA |
| A8C958 | 281-0775-01 | | | CAP,FXD,CER DI:0.1UF,20%,50V | 04222 | SA105E104MAA |
| A8C960 | 281-0775-01 | | | CAP,FXD,CER DI:0.1UF,20%,50V | 04222 | SA105E104MAA |
| A8C964 | 290-1107-00 | | | CAP,FXD,ELCTLT:10UF,20%,50V | 80009 | 290-1107-00 |
| A8C965 | 281-0775-01 | | | CAP,FXD,CER DI:0.1UF,20%,50V | 04222 | SA105E104MAA |
| A8C980 | 281-0775-01 | | | CAP,FXD,CER DI:0.1UF,20%,50V | 04222 | SA105E104MAA |
| A8C982 | 281-0775-01 | | | CAP,FXD,CER DI:0.1UF,20%,50V | 04222 | SA105E104MAA |
| A8C984 | 290-1107-00 | | | CAP,FXD,ELCTLT:10UF,20%,50V | 80009 | 290-1107-00 |
| A8C985 | 281-0775-01 | | | CAP,FXD,CER DI:0.1UF,20%,50V | 04222 | SA105E104MAA |
| A8C986 | 290-0966-00 | | | CAP,FXD,ELCTLT:220UF,+50-20%,25V | 55680 | TLBIE221MAA |
| A8F490 | 159-0193-00 | | | FUSE,WIRE LEAD:10A,125V,5 SEC | 61857 | SP5-10A |
| A8J221 | 131-4048-00 | | | CONN,HDR: | 80009 | 131-4048-00 |
| A8J325 | 131-4049-00 | | | CONN,HDR:: | 80009 | 131-4049-00 |
| A8J390 | 131-3517-00 | | | CONN,DIN:PCB,;FEMALE,RTANG,3 X 50,0.1 CTR,0 .504 MLG X 0.118 TAIL,30 GOLD;,, | 80009 | 131-3517-00 |

| Component No. | Tektronix Part No. | Serial/Assembly No. Effective | Dscont | Name & Description | Mfr. Code | Mfr. Part No. |
|---|---|---|---|---|---|---|
| | | | | *MOUNTING PARTS* | | |
| | 210-0001-00 | | | WASHER,LOCK:#2 INTL,0.013 THK,STL (QUANTITY 2) | 77900 | 1202-00-00-0541C |
| | 210-0405-00 | | | NUT,PLAIN,HEX:2-56 X 0.188,BRS CD PL (QUANTITY 2) | 73743 | 12157-50 |
| | 211-0185-00 | | | SCREW,MACHINE:2-56 X 0.438,PNH,STL (QUANTITY 2) | TK0435 | ORDER BY DESCR |
| | | | | *END MOUNTING PARTS* | | |
| A8J620 | 131-4048-00 | | | CONN,HDR: | 80009 | 131-4048-00 |
| A8J725 | 131-1465-01 | | | CONN,HDR: | 80009 | 131-1465-01 |
| A8J828 | 131-4048-00 | | | CONN,HDR: | 80009 | 131-4048-00 |
| A8R146 | 315-0101-00 | 671-0534-03 | 671-0534-05 | RES,FXD,FILM:100 OHM,5%,0.25W | 80009 | 315-0101-00 |
| A8R146 | 322-3097-00 | 671-0534-06 | | RES,FXD:METAL FILM;100 OHM,1%,0.2W,TC=100 P PM;AXIAL,T&R,SMALL BODY | 57668 | CRB20 FXE 100E |
| A8R148 | 315-0101-00 | 671-0534-03 | 671-0534-05 | RES,FXD,FILM:100 OHM,5%,0.25W | 80009 | 315-0101-00 |
| A8R148 | 322-3097-00 | 671-0534-06 | | RES,FXD:METAL FILM;100 OHM,1%,0.2W,TC=100 P PM;AXIAL,T&R,SMALL BODY | 57668 | CRB20 FXE 100E |
| A8R160 | 315-0102-00 | 671-0534-03 | 671-0534-05 | RES,FXD,FILM:1K OHM,5%,0.25W | 80009 | 315-0102-00 |
| A8R160 | 322-3193-00 | 671-0534-06 | | RES,FXD:METAL FILM;1K OHM,1%,0.2W,TC=100 PP M;AXIAL,T&R,SMALL BODY | 57668 | CRB20 FXE 1K00 |
| A8R165 | 315-0102-00 | 671-0534-03 | 671-0534-05 | RES,FXD,FILM:1K OHM,5%,0.25W | 80009 | 315-0102-00 |
| A8R165 | 322-3193-00 | 671-0534-06 | | RES,FXD:METAL FILM;1K OHM,1%,0.2W,TC=100 PP M;AXIAL,T&R,SMALL BODY | 57668 | CRB20 FXE 1K00 |
| A8R180 | 307-0650-00 | | | RES NTWK,FXD,FI:9,2.7K OHM,5%,0.150W | 11236 | 750-101-R2.7K |
| A8R230 | 307-0675-00 | | | RES NTWK,FXD,FI:(9),1K OHM,2%,1.25W | 11236 | 750-101-R1K OHM |
| A8R240 | 315-0101-00 | 671-0534-03 | 671-0534-05 | RES,FXD,FILM:100 OHM,5%,0.25W | 80009 | 315-0101-00 |
| A8R240 | 322-3097-00 | 671-0534-06 | | RES,FXD:METAL FILM;100 OHM,1%,0.2W,TC=100 P PM;AXIAL,T&R,SMALL BODY | 57668 | CRB20 FXE 100E |
| A8R280 | 307-0650-00 | | | RES NTWK,FXD,FI:9,2.7K OHM,5%,0.150W | 11236 | 750-101-R2.7K |
| A8R285 | 307-0650-00 | | | RES NTWK,FXD,FI:9,2.7K OHM,5%,0.150W | 11236 | 750-101-R2.7K |
| A8R340 | 315-0680-00 | | | RES,FXD,FILM:68 OHM,5%,0.25W | 80009 | 315-0680-00 |
| A8R350 | 315-0680-00 | | | RES,FXD,FILM:68 OHM,5%,0.25W | 80009 | 315-0680-00 |
| A8R352 | 315-0680-00 | | | RES,FXD,FILM:68 OHM,5%,0.25W | 80009 | 315-0680-00 |
| A8R380 | 307-0650-00 | | | RES NTWK,FXD,FI:9,2.7K OHM,5%,0.150W | 11236 | 750-101-R2.7K |
| A8R435 | 307-0675-00 | | | RES NTWK,FXD,FI:(9),1K OHM,2%,1.25W | 11236 | 750-101-R1K OHM |
| A8R530 | 307-0650-00 | | | RES NTWK,FXD,FI:9,2.7K OHM,5%,0.150W | 11236 | 750-101-R2.7K |
| A8R540 | 307-0650-00 | | | RES NTWK,FXD,FI:9,2.7K OHM,5%,0.150W | 11236 | 750-101-R2.7K |
| A8R550 | 307-0650-00 | | | RES NTWK,FXD,FI:9,2.7K OHM,5%,0.150W | 11236 | 750-101-R2.7K |
| A8R552 | 307-0650-00 | | | RES NTWK,FXD,FI:9,2.7K OHM,5%,0.150W | 11236 | 750-101-R2.7K |
| A8R570 | 307-1187-00 | | | RES NTWK,FXD,FI:33 OHM,2%,1.25W | 80009 | 307-1187-00 |
| A8R580 | 315-0330-00 | | | RES,FXD,FILM:33 OHM,5%,0.25W | 80009 | 315-0330-00 |
| A8R582 | 315-0330-00 | | | RES,FXD,FILM:33 OHM,5%,0.25W | 80009 | 315-0330-00 |
| A8R620 | 307-0650-00 | | | RES NTWK,FXD,FI:9,2.7K OHM,5%,0.150W | 11236 | 750-101-R2.7K |
| A8R630 | 307-0650-00 | | | RES NTWK,FXD,FI:9,2.7K OHM,5%,0.150W | 11236 | 750-101-R2.7K |
| A8R640 | 307-0650-00 | | | RES NTWK,FXD,FI:9,2.7K OHM,5%,0.150W | 11236 | 750-101-R2.7K |
| A8R650 | 307-0650-00 | | | RES NTWK,FXD,FI:9,2.7K OHM,5%,0.150W | 11236 | 750-101-R2.7K |
| A8R652 | 307-0650-00 | | | RES NTWK,FXD,FI:9,2.7K OHM,5%,0.150W | 11236 | 750-101-R2.7K |
| A8R670 | 307-1187-00 | | | RES NTWK,FXD,FI:33 OHM,2%,1.25W | 80009 | 307-1187-00 |
| A8R675 | 307-1187-00 | | | RES NTWK,FXD,FI:33 OHM,2%,1.25W | 80009 | 307-1187-00 |
| A8R760 | 307-1187-00 | | | RES NTWK,FXD,FI:33 OHM,2%,1.25W | 80009 | 307-1187-00 |
| A8R765 | 307-1187-00 | | | RES NTWK,FXD,FI:33 OHM,2%,1.25W | 80009 | 307-1187-00 |
| A8R770 | 307-1187-00 | | | RES NTWK,FXD,FI:33 OHM,2%,1.25W | 80009 | 307-1187-00 |
| A8R775 | 307-1187-00 | | | RES NTWK,FXD,FI:33 OHM,2%,1.25W | 80009 | 307-1187-00 |
| A8R820 | 315-0561-00 | | | RES,FXD,FILM:560 OHM,5%,0.25W | 80009 | 315-0561-00 |
| A8R830 | 315-0101-00 | 671-0534-03 | 671-0534-05 | RES,FXD,FILM:100 OHM,5%,0.25W | 80009 | 315-0101-00 |
| A8R830 | 322-3097-00 | 671-0534-06 | | RES,FXD:METAL FILM;100 OHM,1%,0.2W,TC=100 P PM;AXIAL,T&R,SMALL BODY | 57668 | CRB20 FXE 100E |
| A8R835 | 307-0717-00 | | | RES NTWK,FXD,FI:4,100 OHM,2%,0.3W EACH | 80009 | 307-0717-00 |
| A8R840 | 315-0561-00 | | | RES,FXD,FILM:560 OHM,5%,0.25W | 80009 | 315-0561-00 |

| Component No. | Tektronix Part No. | Serial/Assembly No. Effective | Dscont | Name & Description | Mfr. Code | Mfr. Part No. |
|---|---|---|---|---|---|---|
| A8R850 | 315-0561-00 | | | RES,FXD,FILM:560 OHM,5%,0.25W | 80009 | 315-0561-00 |
| A8R860 | 307-1187-00 | | | RES NTWK,FXD,FI:33 OHM,2%,1.25W | 80009 | 307-1187-00 |
| A8R865 | 307-1187-00 | | | RES NTWK,FXD,FI:33 OHM,2%,1.25W | 80009 | 307-1187-00 |
| A8R885 | 307-1187-00 | | | RES NTWK,FXD,FI:33 OHM,2%,1.25W | 80009 | 307-1187-00 |
| A8R930 | 307-0717-00 | | | RES NTWK,FXD,FI:4,100 OHM,2%,0.3W EACH | 80009 | 307-0717-00 |
| A8R935 | 307-0717-00 | | | RES NTWK,FXD,FI:4,100 OHM,2%,0.3W EACH | 80009 | 307-0717-00 |
| A8R950 | 315-0561-00 | | | RES,FXD,FILM:560 OHM,5%,0.25W | 80009 | 315-0561-00 |
| A8R952 | 315-0561-00 | | | RES,FXD,FILM:560 OHM,5%,0.25W | 80009 | 315-0561-00 |
| A8R954 | 315-0103-00 | 671-0534-03 | 671-0534-05 | RES,FXD,FILM:10K OHM,5%,0.25W | 80009 | 315-0103-00 |
| A8R954 | 322-3289-00 | 671-0534-06 | | RES,FXD:METAL FILM;10K OHM,1%,0.2W,TC=100 P PM;AXIAL,T&R,SMALL BODY | 80009 | 322-3289-00 |
| A8R956 | 315-0101-00 | 671-0534-03 | 671-0534-05 | RES,FXD,FILM:100 OHM,5%,0.25W | 80009 | 315-0101-00 |
| A8R956 | 322-3097-00 | 671-0534-06 | | RES,FXD:METAL FILM;100 OHM,1%,0.2W,TC=100 P PM;AXIAL,T&R,SMALL BODY | 57668 | CRB20 FXE 100E |
| A8R958 | 315-0101-00 | 671-0534-03 | 671-0534-05 | RES,FXD,FILM:100 OHM,5%,0.25W | 80009 | 315-0101-00 |
| A8R958 | 322-3097-00 | 671-0534-06 | | RES,FXD:METAL FILM;100 OHM,1%,0.2W,TC=100 P PM;AXIAL,T&R,SMALL BODY | 57668 | CRB20 FXE 100E |
| A8R960 | 315-0330-00 | 671-0534-06 | | RES,FXD,FILM:33 OHM,5%,0.25W | 80009 | 315-0330-00 |
| A8TP130 | 214-4085-00 | | | TERM,TEST POINT:0.070 ID,0.220 H,0.063 DIA PCB,0.015 X 0.032 BRASS,W/ RED NYLON COLLAR | 26364 | 104-01-02 |
| A8TP280 | 214-4085-00 | | | TERM,TEST POINT:0.070 ID,0.220 H,0.063 DIA PCB,0.015 X 0.032 BRASS,W/ RED NYLON COLLAR | 26364 | 104-01-02 |
| A8TP530 | 214-4085-00 | | | TERM,TEST POINT:0.070 ID,0.220 H,0.063 DIA PCB,0.015 X 0.032 BRASS,W/ RED NYLON COLLAR | 26364 | 104-01-02 |
| A8TP580 | 214-4085-00 | | | TERM,TEST POINT:0.070 ID,0.220 H,0.063 DIA PCB,0.015 X 0.032 BRASS,W/ RED NYLON COLLAR | 26364 | 104-01-02 |
| A8TP940 | 214-4085-00 | | | TERM,TEST POINT:0.070 ID,0.220 H,0.063 DIA PCB,0.015 X 0.032 BRASS,W/ RED NYLON COLLAR | 26364 | 104-01-02 |
| A8TP980 | 214-4085-00 | | | TERM,TEST POINT:0.070 ID,0.220 H,0.063 DIA PCB,0.015 X 0.032 BRASS,W/ RED NYLON COLLAR | 26364 | 104-01-02 |
| A8U120 | 160-5570-00 | | | MICROCKT,DGTL:10 LOW OUT ARRAY LOGIC,PRGM *MOUNTING PARTS* | 80009 | 160-5570-00 |
| | 136-0925-00 | | | SOCKET,DIP:: *END MOUNTING PARTS* | 91506 | 224-AG30D |
| A8U125 | 156-1756-00 | | | IC,DIGITAL:ALSTTL,FLIP FLOP;DUAL D-TYPE W/C LEAR;74ALS74,DIP14.3 | 01295 | SN74ALS74NP3/JP4 |
| A8U135 | 156-1756-00 | | | IC,DIGITAL:ALSTTL,FLIP FLOP;DUAL D-TYPE W/C LEAR;74ALS74,DIP14.3 | 01295 | SN74ALS74NP3/JP4 |
| A8U140 | 156-2391-00 | | | IC,DIGITAL:ALSTTL,BUFFER/DRIVER;OCTAL NONIN V, 3-STATE;74ALS541,DIP20.3,TUBE | 80009 | 156-2391-00 |
| A8U145 | 156-1910-00 | | | IC,DIGITAL:ALSTTL,GATE;8-INPUT NAND;74ALS30 ,DIP14.3 | 01295 | SN74ALS30AN3 |
| A8U150 | 156-1756-00 | | | IC,DIGITAL:ALSTTL,FLIP FLOP;DUAL D-TYPE W/C LEAR;74ALS74,DIP14.3 | 01295 | SN74ALS74NP3/JP4 |
| A8U160 | 156-2601-00 | | | IC,DIGITAL:HCMOS,COUNTER;12-STAGE BINARY RI PPLE;74HC4040,DIP16.3,TUBE | 80009 | 156-2601-00 |
| A8U170 | 160-5111-02 | | | MICROCKT,DGTL:NMOS,65536 X 8 EPROM,PRGM *MOUNTING PARTS* | 80009 | 160-5111-02 |
| | 136-0755-00 | | | SOCKET,DIP: *END MOUNTING PARTS* | 09922 | DILB28P-108 |
| A8U175 | 156-2331-00 | | | IC,DIGITAL:LSTTL,COUNTER;8-BIT, WITH STORAG E REGISTER, 3-STATE;74LS590,DIP16.3,TUBE | 01295 | SN74LS590N3 |
| A8U180 | 156-1748-02 | | | IC,DIGITAL:ALSTTL,TRANSCEIVER;OCTAL NONINV, 3-STATE;74ALS245,DIP20.3,TUBE *MOUNTING PARTS* | 01295 | SN74ALS245AN3 |
| | 136-0752-00 | | | SKT,PL-IN ELEK:MICROCIRCUIT,20 DIP *END MOUNTING PARTS* | 09922 | DILB20P-108 |
| A8U230 | 156-1748-02 | | | IC,DIGITAL:ALSTTL,TRANSCEIVER;OCTAL NONINV, 3-STATE;74ALS245,DIP20.3,TUBE *MOUNTING PARTS* | 01295 | SN74ALS245AN3 |

| Component No. | Tektronix Part No. | Serial/Assembly No. Effective | Dscont | Name & Description | Mfr. Code | Mfr. Part No. |
|---|---|---|---|---|---|---|
| | 136-0752-00 | | | SKT,PL-IN ELEK:MICROCIRCUIT,20 DIP<br>*END MOUNTING PARTS* | 09922 | DILB20P-108 |
| A8U240 | 156-3237-00 | | | IC,PROCESSOR:CMOS,PERIPHERAL;PROGRAMMABLE I NTERVAL TIMER;82C54-2,DIP24.6 | 80009 | 156-3237-00 |
| A8U250 | 156-2484-00 | | | IC,DIGITAL:ASTTL,GATE;QUAD 2-INPUT NAND;74A S00,DIP14.3,DUPLICATE OF 156-2319-00 | 01295 | SN74AS00(NORJ) |
| A8U260 | 160-5105-01 | 671-0534-03 | 671-0534-04 | IC,DIGITAL:STTL,PLD;PAL,16R4,25NS,28.5MHZ,1 80MA,PRGM 156-2123-00;16R4A,DIP20.3 | 80009 | 160-5105-01 |
| A8U260 | 160-5105-02 | 671-0534-05 | | IC,DIGITAL:STTL,PLD;PAL,16R4,25NS,28.5MHZ,1 80MA,PRGM 156-2123-00;16R4A,DIP20.3<br>*MOUNTING PARTS* | 80009 | 160-5105-02 |
| | 136-0752-00 | | | SKT,PL-IN ELEK:MICROCIRCUIT,20 DIP<br>*END MOUNTING PARTS* | 09922 | DILB20P-108 |
| A8U265 | 160-5110-00 | | | IC,DIGITAL:STTL,PLD;PAL,20RA10,30NS,20MHZ,2 00MA,PRGM 156-2647-00;20RA10,DIP24.3<br>*MOUNTING PARTS* | 80009 | 160-5110-00 |
| | 136-0925-00 | | | SOCKET,DIP::<br>*END MOUNTING PARTS* | 91506 | 224-AG30D |
| A8U270 | 156-2331-00 | | | IC,DIGITAL:LSTTL,COUNTER;8-BIT, WITH STORAG E REGISTER, 3-STATE;74LS590,DIP16.3,TUBE | 01295 | SN74LS590N3 |
| A8U280 | 156-1748-02 | | | IC,DIGITAL:ALSTTL,TRANSCEIVER;OCTAL NONINV, 3-STATE;74ALS245,DIP20.3,TUBE<br>*MOUNTING PARTS* | 01295 | SN74ALS245AN3 |
| | 136-0752-00 | | | SKT,PL-IN ELEK:MICROCIRCUIT,20 DIP<br>*END MOUNTING PARTS* | 09922 | DILB20P-108 |
| A8U285 | 156-1748-02 | | | IC,DIGITAL:ALSTTL,TRANSCEIVER;OCTAL NONINV, 3-STATE;74ALS245,DIP20.3,TUBE<br>*MOUNTING PARTS* | 01295 | SN74ALS245AN3 |
| | 136-0752-00 | | | SKT,PL-IN ELEK:MICROCIRCUIT,20 DIP<br>*END MOUNTING PARTS* | 09922 | DILB20P-108 |
| A8U330 | 160-5571-03 | 671-0534-03 | 671-0534-04 | MICROCKT,DGTL:ARRAY LOGIC,MIVRO DEVICE,PRGM | 80009 | 160-5571-03 |
| A8U330 | 160-5571-04 | 671-0534-05 | | MICROCKT,DGTL:ARRAY LOGIC,MIVRO DEVICE,PRGM ,AMPAL22V10,DIP24<br>*MOUNTING PARTS* | 80009 | 160-5571-04 |
| | 136-0925-00 | | | SOCKET,DIP::<br>*END MOUNTING PARTS* | 91506 | 224-AG30D |
| A8U340 | 156-2292-00 | | | IC,DIGITAL:ALSTTL,TRANSCEIVER;OCTAL NONINV, 3-STATE;74ALS652,DIP24.3,TUBE | 80009 | 156-2292-00 |
| A8U350 | 156-2773-00 | | | IC,PROCESSOR:CMOS,PERIPHERAL;PROGRAMMABLE I NTERVAL TIMER,8MHZ;82C54,DIP24.6 | 80009 | 156-2773-00 |
| A8U365 | 156-2391-00 | | | IC,DIGITAL:ALSTTL,BUFFER/DRIVER;OCTAL NONIN V, 3-STATE;74ALS541,DIP20.3,TUBE<br>*MOUNTING PARTS* | 80009 | 156-2391-00 |
| | 136-0752-00 | | | SKT,PL-IN ELEK:MICROCIRCUIT,20 DIP<br>*END MOUNTING PARTS* | 09922 | DILB20P-108 |
| A8U368 | 160-5103-00 | | | MICROCKT,DGTL:LOW PWR PRGM ARRAY LOGIC,PRGM<br>*MOUNTING PARTS* | 80009 | 160-5103-00 |
| | 136-0752-00 | | | SKT,PL-IN ELEK:MICROCIRCUIT,20 DIP<br>*END MOUNTING PARTS* | 09922 | DILB20P-108 |
| A8U380 | 156-1748-02 | | | IC,DIGITAL:ALSTTL,TRANSCEIVER;OCTAL NONINV, 3-STATE;74ALS245,DIP20.3,TUBE<br>*MOUNTING PARTS* | 01295 | SN74ALS245AN3 |
| | 136-0752-00 | | | SKT,PL-IN ELEK:MICROCIRCUIT,20 DIP<br>*END MOUNTING PARTS* | 09922 | DILB20P-108 |
| A8U385 | 156-2391-00 | | | IC,DIGITAL:ALSTTL,BUFFER/DRIVER;OCTAL NONIN V, 3-STATE;74ALS541,DIP20.3,TUBE<br>*MOUNTING PARTS* | 80009 | 156-2391-00 |
| | 136-0752-00 | | | SKT,PL-IN ELEK:MICROCIRCUIT,20 DIP<br>*END MOUNTING PARTS* | 09922 | DILB20P-108 |
| A8U430 | 156-2612-00 | | | IC,DIGITAL:ASTTL,FLIP FLOP;OCTAL D-TYPE, IN V, 3-STATE, CLEAR;74AS574,DIP20.3<br>*MOUNTING PARTS* | 01295 | SN74AS574N |
| | 136-0752-00 | | | SKT,PL-IN ELEK:MICROCIRCUIT,20 DIP | 09922 | DILB20P-108 |

| Component No. | Tektronix Part No. | Serial/Assembly No. Effective | Dscont | Name & Description | Mfr. Code | Mfr. Part No. |
|---|---|---|---|---|---|---|
| | | | | *END MOUNTING PARTS* | | |
| A8U435 | 156-2391-00 | | | IC,DIGITAL:ALSTTL,BUFFER/DRIVER;OCTAL NONIN V, 3-STATE;74ALS541,DIP20.3,TUBE | 80009 | 156-2391-00 |
| | | | | *MOUNTING PARTS* | | |
| | 136-0752-00 | | | SKT,PL-IN ELEK:MICROCIRCUIT,20 DIP | 09922 | DILB20P-108 |
| | | | | *END MOUNTING PARTS* | | |
| A8U440 | 160-5109-00 | | | MICROCKT,DGTL:HEX 16 INP RGTR AND/OR,PRGM | 80009 | 160-5109-00 |
| | | | | *MOUNTING PARTS* | | |
| | 136-0752-00 | | | SKT,PL-IN ELEK:MICROCIRCUIT,20 DIP | 09922 | DILB20P-108 |
| | | | | *END MOUNTING PARTS* | | |
| A8U445 | 156-2992-00 | | | IC,MEMORY:CMOS,SRAM;2K X 8,35NS,OE;,DIP24.3 | 80009 | 156-2992-00 |
| | | | | *MOUNTING PARTS* | | |
| | 136-0925-00 | | | SOCKET,DIP:: | 91506 | 224-AG30D |
| | | | | *END MOUNTING PARTS* | | |
| A8U450 | 156-2612-00 | | | IC,DIGITAL:ASTTL,FLIP FLOP;OCTAL D-TYPE, IN V, 3-STATE, CLEAR;74AS574,DIP20.3 | 01295 | SN74AS574N |
| A8U452 | 156-2612-00 | | | IC,DIGITAL:ASTTL,FLIP FLOP;OCTAL D-TYPE, IN V, 3-STATE, CLEAR;74AS574,DIP20.3 | 01295 | SN74AS574N |
| | | | | *MOUNTING PARTS* | | |
| | 136-0752-00 | | | SKT,PL-IN ELEK:MICROCIRCUIT,20 DIP | 09922 | DILB20P-108 |
| | | | | *END MOUNTING PARTS* | | |
| A8U455 | 156-2992-00 | | | IC,MEMORY:CMOS,SRAM;2K X 8,35NS,OE;,DIP24.3 | 80009 | 156-2992-00 |
| | | | | *MOUNTING PARTS* | | |
| | 136-0925-00 | | | SOCKET,DIP:: | 91506 | 224-AG30D |
| | | | | *END MOUNTING PARTS* | | |
| A8U458 | 156-2992-00 | | | IC,MEMORY:CMOS,SRAM;2K X 8,35NS,OE;,DIP24.3 | 80009 | 156-2992-00 |
| | | | | *MOUNTING PARTS* | | |
| | 136-0925-00 | | | SOCKET,DIP:: | 91506 | 224-AG30D |
| | | | | *END MOUNTING PARTS* | | |
| A8U460 | 156-2612-00 | | | IC,DIGITAL:ASTTL,FLIP FLOP;OCTAL D-TYPE, IN V, 3-STATE, CLEAR;74AS574,DIP20.3 | 01295 | SN74AS574N |
| | | | | *MOUNTING PARTS* | | |
| | 136-0752-00 | | | SKT,PL-IN ELEK:MICROCIRCUIT,20 DIP | 09922 | DILB20P-108 |
| | | | | *END MOUNTING PARTS* | | |
| A8U465 | 156-2992-00 | | | IC,MEMORY:CMOS,SRAM;2K X 8,35NS,OE;,DIP24.3 | 80009 | 156-2992-00 |
| | | | | *MOUNTING PARTS* | | |
| | 136-0925-00 | | | SOCKET,DIP:: | 91506 | 224-AG30D |
| | | | | *END MOUNTING PARTS* | | |
| A8U475 | 160-5106-00 | | | MICROCKT,DGTL:OCTAL 16 INP,PRGM | 80009 | 160-5106-00 |
| | | | | *MOUNTING PARTS* | | |
| | 136-0752-00 | | | SKT,PL-IN ELEK:MICROCIRCUIT,20 DIP | 09922 | DILB20P-108 |
| | | | | *END MOUNTING PARTS* | | |
| A8U480 | 160-5100-00 | 671-0534-03 | 671-0534-03 | MICROCKT,DGTL:OCTAL 20 INP AND/OR,PRGM | 80009 | 160-5100-00 |
| A8U480 | 160-5100-01 | 671-0534-04 | | MICROCKT,DGTL:OCTAL 20 INP AND/OR,PRGM LOGI C ARRAY,20L8A,DIP24 | 80009 | 160-5100-01 |
| | | | | *MOUNTING PARTS* | | |
| | 136-0925-00 | | | SOCKET,DIP:: | 91506 | 224-AG30D |
| | | | | *END MOUNTING PARTS* | | |
| A8U485 | 156-2391-00 | | | IC,DIGITAL:ALSTTL,BUFFER/DRIVER;OCTAL NONIN V, 3-STATE;74ALS541,DIP20.3,TUBE | 80009 | 156-2391-00 |
| | | | | *MOUNTING PARTS* | | |
| | 136-0752-00 | | | SKT,PL-IN ELEK:MICROCIRCUIT,20 DIP | 09922 | DILB20P-108 |
| | | | | *END MOUNTING PARTS* | | |
| A8U488 | 156-2391-00 | | | IC,DIGITAL:ALSTTL,BUFFER/DRIVER;OCTAL NONIN V, 3-STATE;74ALS541,DIP20.3,TUBE | 80009 | 156-2391-00 |
| | | | | *MOUNTING PARTS* | | |
| | 136-0752-00 | | | SKT,PL-IN ELEK:MICROCIRCUIT,20 DIP | 09922 | DILB20P-108 |
| | | | | *END MOUNTING PARTS* | | |
| A8U530 | 156-2612-00 | | | IC,DIGITAL:ASTTL,FLIP FLOP;OCTAL D-TYPE, IN V, 3-STATE, CLEAR;74AS574,DIP20.3 | 01295 | SN74AS574N |
| A8U540 | 156-1748-02 | | | IC,DIGITAL:ALSTTL,TRANSCEIVER;OCTAL NONINV, 3-STATE;74ALS245,DIP20.3,TUBE | 01295 | SN74ALS245AN3 |

| Component No. | Tektronix Part No. | Serial/Assembly No. Effective | Dscont | Name & Description | Mfr. Code | Mfr. Part No. |
|---|---|---|---|---|---|---|
| A8U550 | 156-1748-02 | | | IC,DIGITAL:ALSTTL,TRANSCEIVER;OCTAL NONINV, 3-STATE;74ALS245,DIP20.3,TUBE | 01295 | SN74ALS245AN3 |
| A8U552 | 156-1748-02 | | | IC,DIGITAL:ALSTTL,TRANSCEIVER;OCTAL NONINV, 3-STATE;74ALS245,DIP20.3,TUBE | 01295 | SN74ALS245AN3 |
| A8U560 | 156-1748-02 | | | IC,DIGITAL:ALSTTL,TRANSCEIVER;OCTAL NONINV, 3-STATE;74ALS245,DIP20.3,TUBE | 01295 | SN74ALS245AN3 |
| A8U570 | 160-5107-00 | | | MICROCKT,DGTL:OCTAL 16 INP,PRGM | 80009 | 160-5107-00 |
| | | | | *MOUNTING PARTS* | | |
| | 136-0752-00 | | | SKT,PL-IN ELEK:MICROCIRCUIT,20 DIP | 09922 | DILB20P-108 |
| | | | | *END MOUNTING PARTS* | | |
| A8U580 | 160-5564-00 | | | MICROCKT,DGTL:OCTAL 16 INP AND/OR INV,PRGM | 80009 | 160-5564-00 |
| | | | | *MOUNTING PARTS* | | |
| | 136-0752-00 | | | SKT,PL-IN ELEK:MICROCIRCUIT,20 DIP | 09922 | DILB20P-108 |
| | | | | *END MOUNTING PARTS* | | |
| A8U630 | 156-1748-02 | | | IC,DIGITAL:ALSTTL,TRANSCEIVER;OCTAL NONINV, 3-STATE;74ALS245,DIP20.3,TUBE | 01295 | SN74ALS245AN3 |
| A8U640 | 156-1748-02 | | | IC,DIGITAL:ALSTTL,TRANSCEIVER;OCTAL NONINV, 3-STATE;74ALS245,DIP20.3,TUBE | 01295 | SN74ALS245AN3 |
| A8U650 | 156-1748-02 | | | IC,DIGITAL:ALSTTL,TRANSCEIVER;OCTAL NONINV, 3-STATE;74ALS245,DIP20.3,TUBE | 01295 | SN74ALS245AN3 |
| A8U652 | 156-1748-02 | | | IC,DIGITAL:ALSTTL,TRANSCEIVER;OCTAL NONINV, 3-STATE;74ALS245,DIP20.3,TUBE | 01295 | SN74ALS245AN3 |
| A8U660 | 156-1748-02 | | | IC,DIGITAL:ALSTTL,TRANSCEIVER;OCTAL NONINV, 3-STATE;74ALS245,DIP20.3,TUBE | 01295 | SN74ALS245AN3 |
| A8U670 | 156-2612-00 | | | IC,DIGITAL:ASTTL,FLIP FLOP;OCTAL D-TYPE, INV, 3-STATE, CLEAR;74AS574,DIP20.3 | 01295 | SN74AS574N |
| A8U680 | 156-2612-00 | | | IC,DIGITAL:ASTTL,FLIP FLOP;OCTAL D-TYPE, INV, 3-STATE, CLEAR;74AS574,DIP20.3 | 01295 | SN74AS574N |
| A8U688 | 156-2391-00 | | | IC,DIGITAL:ALSTTL,BUFFER/DRIVER;OCTAL NONINV, 3-STATE;74ALS541,DIP20.3,TUBE | 80009 | 156-2391-00 |
| A8U730 | 156-2864-00 | | | IC,DIGITAL:FTTL,BUFFER;OCTAL, BUFFER/DRIVER, 3-STATE;74F541,DIP20.3,TUBE | 80009 | 156-2864-00 |
| | | | | *MOUNTING PARTS* | | |
| | 136-0752-00 | | | SKT,PL-IN ELEK:MICROCIRCUIT,20 DIP | 09922 | DILB20P-108 |
| | | | | *END MOUNTING PARTS* | | |
| A8U735 | 156-2864-00 | | | IC,DIGITAL:FTTL,BUFFER;OCTAL, BUFFER/DRIVER, 3-STATE;74F541,DIP20.3,TUBE | 80009 | 156-2864-00 |
| | | | | *MOUNTING PARTS* | | |
| | 136-0752-00 | | | SKT,PL-IN ELEK:MICROCIRCUIT,20 DIP | 09922 | DILB20P-108 |
| | | | | *END MOUNTING PARTS* | | |
| A8U740 | 156-3461-00 | | | IC,MEMORY:CMOS,SRAM;16K X 4,25NS;,DIP22.3 | 80009 | 156-3461-00 |
| | | | | *MOUNTING PARTS* | | |
| | 136-0727-00 | | | SKT,PL-IN ELEK:MICROCKT,8 CONTACT | 09922 | DILB8P-108 |
| | 136-0728-00 | | | SKT,PL-IN ELEK:MICROCKT,14 CONTACT | 09922 | DILB14P-108 |
| | | | | *END MOUNTING PARTS* | | |
| A8U745 | 156-3461-00 | | | IC,MEMORY:CMOS,SRAM;16K X 4,25NS;,DIP22.3 | 80009 | 156-3461-00 |
| | | | | *MOUNTING PARTS* | | |
| | 136-0727-00 | | | SKT,PL-IN ELEK:MICROCKT,8 CONTACT | 09922 | DILB8P-108 |
| | 136-0728-00 | | | SKT,PL-IN ELEK:MICROCKT,14 CONTACT | 09922 | DILB14P-108 |
| | | | | *END MOUNTING PARTS* | | |
| A8U750 | 156-3461-00 | | | IC,MEMORY:CMOS,SRAM;16K X 4,25NS;,DIP22.3 | 80009 | 156-3461-00 |
| | | | | *MOUNTING PARTS* | | |
| | 136-0727-00 | | | SKT,PL-IN ELEK:MICROCKT,8 CONTACT | 09922 | DILB8P-108 |
| | 136-0728-00 | | | SKT,PL-IN ELEK:MICROCKT,14 CONTACT | 09922 | DILB14P-108 |
| | | | | *END MOUNTING PARTS* | | |
| A8U752 | 156-3461-00 | | | IC,MEMORY:CMOS,SRAM;16K X 4,25NS;,DIP22.3 | 80009 | 156-3461-00 |
| | | | | *MOUNTING PARTS* | | |
| | 136-0727-00 | | | SKT,PL-IN ELEK:MICROCKT,8 CONTACT | 09922 | DILB8P-108 |
| | 136-0728-00 | | | SKT,PL-IN ELEK:MICROCKT,14 CONTACT | 09922 | DILB14P-108 |
| | | | | *END MOUNTING PARTS* | | |

| Component No. | Tektronix Part No. | Serial/Assembly No. Effective | Dscont | Name & Description | Mfr. Code | Mfr. Part No. |
|---|---|---|---|---|---|---|
| A8U755 | 156-3461-00 | | | IC,MEMORY:CMOS,SRAM;16K X 4,25NS;,DIP22.3 | 80009 | 156-3461-00 |
| | | | | *MOUNTING PARTS* | | |
| | 136-0727-00 | | | SKT,PL-IN ELEK:MICROCKT,8 CONTACT | 09922 | DILB8P-108 |
| | 136-0728-00 | | | SKT,PL-IN ELEK:MICROCKT,14 CONTACT | 09922 | DILB14P-108 |
| | | | | *END MOUNTING PARTS* | | |
| A8U758 | 156-3461-00 | | | IC,MEMORY:CMOS,SRAM;16K X 4,25NS;,DIP22.3 | 80009 | 156-3461-00 |
| | | | | *MOUNTING PARTS* | | |
| | 136-0727-00 | | | SKT,PL-IN ELEK:MICROCKT,8 CONTACT | 09922 | DILB8P-108 |
| | 136-0728-00 | | | SKT,PL-IN ELEK:MICROCKT,14 CONTACT | 09922 | DILB14P-108 |
| | | | | *END MOUNTING PARTS* | | |
| A8U760 | 156-3461-00 | | | IC,MEMORY:CMOS,SRAM;16K X 4,25NS;,DIP22.3 | 80009 | 156-3461-00 |
| | | | | *MOUNTING PARTS* | | |
| | 136-0727-00 | | | SKT,PL-IN ELEK:MICROCKT,8 CONTACT | 09922 | DILB8P-108 |
| | 136-0728-00 | | | SKT,PL-IN ELEK:MICROCKT,14 CONTACT | 09922 | DILB14P-108 |
| | | | | *END MOUNTING PARTS* | | |
| A8U765 | 156-3461-00 | | | IC,MEMORY:CMOS,SRAM;16K X 4,25NS;,DIP22.3 | 80009 | 156-3461-00 |
| | | | | *MOUNTING PARTS* | | |
| | 136-0727-00 | | | SKT,PL-IN ELEK:MICROCKT,8 CONTACT | 09922 | DILB8P-108 |
| | 136-0728-00 | | | SKT,PL-IN ELEK:MICROCKT,14 CONTACT | 09922 | DILB14P-108 |
| | | | | *END MOUNTING PARTS* | | |
| A8U770 | 156-3508-00 | | | IC,DIGITAL:ASTTL,FLIP FLOP;OCTAL D-TYPE, NO NINV, CLEAR, 3-STATE;74AS575,DIP24.3 | 80009 | 156-3508-00 |
| A8U775 | 156-3508-00 | | | IC,DIGITAL:ASTTL,FLIP FLOP;OCTAL D-TYPE, NO NINV, CLEAR, 3-STATE;74AS575,DIP24.3 | 80009 | 156-3508-00 |
| A8U780 | 156-2391-00 | | | IC,DIGITAL:ALSTTL,BUFFER/DRIVER;OCTAL NONINV, 3-STATE;74ALS541,DIP20.3,TUBE | 80009 | 156-2391-00 |
| A8U785 | 156-2391-00 | | | IC,DIGITAL:ALSTTL,BUFFER/DRIVER;OCTAL NONINV, 3-STATE;74ALS541,DIP20.3,TUBE | 80009 | 156-2391-00 |
| A8U788 | 156-2391-00 | | | IC,DIGITAL:ALSTTL,BUFFER/DRIVER;OCTAL NONINV, 3-STATE;74ALS541,DIP20.3,TUBE | 80009 | 156-2391-00 |
| A8U830 | 156-2114-00 | | | IC,DIGITAL:ECL,RECEIVER;QUAD LINE;10H115,DIP16.3,TUBE | 80009 | 156-2114-00 |
| | | | | *MOUNTING PARTS* | | |
| | 136-0729-00 | | | SOCKET,DIP:PCB,;FEMALE,STR,2 X 8,16 POS,0.1 X 0.3 CTR,0.175 H X 0.130 TAIL,BECU,TIN | 09922 | DILB16P-108T |
| | | | | *END MOUNTING PARTS* | | |
| A8U835 | 156-2290-00 | | | IC,DIGITAL:ECL,TRANSLATOR;QUAD ECL-TO-TTL;10H125,DIP16.3,TUBE | 80009 | 156-2290-00 |
| | | | | *MOUNTING PARTS* | | |
| | 136-0729-00 | | | SOCKET,DIP:PCB,;FEMALE,STR,2 X 8,16 POS,0.1 X 0.3 CTR,0.175 H X 0.130 TAIL,BECU,TIN | 09922 | DILB16P-108T |
| | | | | *END MOUNTING PARTS* | | |
| A8U840 | 156-3509-00 | | | IC,DIGITAL:FTTL,COUNTER;SYNCH 8-BIT UP/DOWN BINARY, 3-STATE;74F1779,DIP16.3,TUBE | 80009 | 156-3509-00 |
| A8U850 | 156-3509-00 | | | IC,DIGITAL:FTTL,COUNTER;SYNCH 8-BIT UP/DOWN BINARY, 3-STATE;74F1779,DIP16.3,TUBE | 80009 | 156-3509-00 |
| A8U852 | 156-2289-00 | | | IC,DIGITAL:ECL,TRANSLATOR;QUAD TTL-TO-ECL;10H124,DIP16.3,TUBE | 04713 | MC10H124P |
| | | | | *MOUNTING PARTS* | | |
| | 136-0729-00 | | | SOCKET,DIP:PCB,;FEMALE,STR,2 X 8,16 POS,0.1 X 0.3 CTR,0.175 H X 0.130 TAIL,BECU,TIN | 09922 | DILB16P-108T |
| | | | | *END MOUNTING PARTS* | | |
| A8U860 | 156-1664-00 | | | IC,DIGITAL:ALSTTL,FLIP FLOP;OCTAL NONINV D-TYPE, 3-STATE;74ALS574,DIP20.3,TUBE | 80009 | 156-1664-00 |
| A8U865 | 156-2612-00 | | | IC,DIGITAL:ASTTL,FLIP FLOP;OCTAL D-TYPE, INV, 3-STATE, CLEAR;74AS574,DIP20.3 | 01295 | SN74AS574N |
| A8U868 | 156-2323-00 | | | IC,DIGITAL:ASTTL,GATE;HEX INVERTER;74AS04,DIP14.3,TUBE | 01295 | SN74AS04N |
| A8U880 | 156-3461-00 | | | IC,MEMORY:CMOS,SRAM;16K X 4,25NS;,DIP22.3 | 80009 | 156-3461-00 |
| | | | | *MOUNTING PARTS* | | |
| | 136-0727-00 | | | SKT,PL-IN ELEK:MICROCKT,8 CONTACT | 09922 | DILB8P-108 |

| Component No. | Tektronix Part No. | Serial/Assembly No. Effective | Dscont | Name & Description | Mfr. Code | Mfr. Part No. |
|---|---|---|---|---|---|---|
| | 136-0728-00 | | | SKT,PL-IN ELEK:MICROCKT,14 CONTACT<br>*END MOUNTING PARTS* | 09922 | DILB14P-108 |
| A8U885 | 156-1664-00 | | | IC,DIGITAL:ALSTTL,FLIP FLOP;OCTAL NONINV D-TYPE, 3-STATE;74ALS574,DIP20.3,TUBE | 80009 | 156-1664-00 |
| A8U888 | 156-2612-00 | | | IC,DIGITAL:ASTTL,FLIP FLOP;OCTAL D-TYPE, INV, 3-STATE, CLEAR;74AS574,DIP20.3 | 01295 | SN74AS574N |
| A8U930 | 156-2290-00 | | | IC,DIGITAL:ECL,TRANSLATOR;QUAD ECL-TO-TTL;10H125,DIP16.3,TUBE<br>*MOUNTING PARTS* | 80009 | 156-2290-00 |
| | 136-0729-00 | | | SOCKET,DIP:PCB,;FEMALE,STR,2 X 8,16 POS,0.1 X 0.3 CTR,0.175 H X 0.130 TAIL,BECU,TIN<br>*END MOUNTING PARTS* | 09922 | DILB16P-108T |
| A8U935 | 156-2290-00 | | | IC,DIGITAL:ECL,TRANSLATOR;QUAD ECL-TO-TTL;10H125,DIP16.3,TUBE<br>*MOUNTING PARTS* | 80009 | 156-2290-00 |
| | 136-0729-00 | | | SOCKET,DIP:PCB,;FEMALE,STR,2 X 8,16 POS,0.1 X 0.3 CTR,0.175 H X 0.130 TAIL,BECU,TIN<br>*END MOUNTING PARTS* | 09922 | DILB16P-108T |
| A8U950 | 156-1713-00 | | | IC,DIGITAL:ECL,MULTIVIBRATOR;RETRIG MONOSTABLE;10198,DIP16.3,TUBE | 80009 | 156-1713-00 |
| A8U955 | 156-2290-00 | | | IC,DIGITAL:ECL,TRANSLATOR;QUAD ECL-TO-TTL;10H125,DIP16.3,TUBE<br>*MOUNTING PARTS* | 80009 | 156-2290-00 |
| | 136-0729-00 | | | SOCKET,DIP:PCB,;FEMALE,STR,2 X 8,16 POS,0.1 X 0.3 CTR,0.175 H X 0.130 TAIL,BECU,TIN<br>*END MOUNTING PARTS* | 09922 | DILB16P-108T |
| A8U960 | 156-1756-00 | 671-0534-03 | 671-0534-03 | IC,DIGITAL:ALSTTL,FLIP FLOP;DUAL D-TYPE W/CLEAR;74ALS74,DIP14.3 | 01295 | SN74ALS74NP3/JP4 |
| A8U960 | 155-0397-00 | 671-0534-04 | 671-0534-05 | MICROCIRCUIT:74ALS74 & 74F74 ASSEMBLY | 80009 | 155-0397-00 |
| A8U960 | 156-1611-00 | 671-0534-06 | | IC,DIGITAL:FTTL,FLIP FLOP;DUAL D-TYPE;74F74,DIP14.3,TUBE | 80009 | 156-1611-00 |
| A8U963 | ----- ----- | 671-0534-04 | 671-0534-05 | (PART OF U960 COMBO ONLY) | | |
| A8U963 | 156-1756-00 | 671-0534-06 | | IC,DIGITAL:ALSTTL,FLIP FLOP;DUAL D-TYPE W/CLEAR;74ALS74,DIP14.3 | 01295 | SN74ALS74NP3/JP4 |
| A8U965 | 156-2159-00 | | | IC,DIGITAL:ASTTL,MUX;QUAD 2-TO-1 DATA SELECTOR, NONINV;74AS157,DIP16.3,TUBE | 80009 | 156-2159-00 |
| A8U980 | 156-1756-00 | | | IC,DIGITAL:ALSTTL,FLIP FLOP;DUAL D-TYPE W/CLEAR;74ALS74,DIP14.3 | 01295 | SN74ALS74NP3/JP4 |
| A8U985 | 156-2339-00 | | | IC,DIGITAL:ASTTL,GATE;QUAD 2-INPUT OR;74AS32,DIP14.3,TUBE | 80009 | 156-2339-00 |
| A8W925 | 131-0566-00 | | | BUS,CONDUCTOR:DUMMY RES,0.094 OD X 0.225 L | 80009 | 131-0566-00 |
| A8Y250 | 119-1413-00 | | | OSC,XTAL CLOCK:20.0MHZ, +/-0.05 %, TTL, 4 PIN 14 PIN DIP COMPATIBLE | 14301 | AE 404-417 |

| Component No. | Tektronix Part No. | Serial/Assembly No. Effective | Dscont | Name & Description | Mfr. Code | Mfr. Part No. |
|---|---|---|---|---|---|---|
| A9 | 671-0533-02 | B022000 | B022352 | CIRCUIT BD ASSY:DISPLAY MEMORY II | 80009 | 671-0533-02 |
| A9 | 671-0533-05 | B022353 | | CIRCUIT BD ASSY:DISPLAY MEMORY II | 80009 | 671-0533-05 |
| | | | | *ATTACHED PARTS* | | |
| | 105-0160-00 | | | EJECTOR,CKT BD:WHITE PLASTIC (QUANTITY 2) | 80009 | 105-0160-00 |
| | 131-0157-00 | | | TERMINAL,PIN:0.25 L X 0.04 OD,BRS,SLDR PL (QUANTITY 2 ON BACK) | 80009 | 131-0157-00 |
| | 214-1337-00 | | | PIN,SPRING:0.25 L X 0.103 OD,STL CD PL (QUANTITY 2) | 000BK | ORDER BY DESCR |
| | | | | *END ATTACHED PARTS* | | |
| A9C116 | 281-0775-01 | | | CAP,FXD,CER DI:0.1UF,20%,50V | 04222 | SA105E104MAA |
| A9C118 | 290-0974-00 | | | CAP,FXD,ELCTLT:10UF,20%,50VDC | 55680 | UVX1H100MAA |
| A9C119 | 290-0944-00 | | | CAP,FXD,ELCTLT:220UF,+50-20%,10V | 55680 | UVX1C221MPA |
| A9C123 | 283-0479-00 | | | CAP,FXD,CER DI:0.47UF,+80-20%,25V | 80009 | 283-0479-00 |
| A9C125 | 283-0479-00 | | | CAP,FXD,CER DI:0.47UF,+80-20%,25V | 80009 | 283-0479-00 |
| A9C127 | 283-0479-00 | | | CAP,FXD,CER DI:0.47UF,+80-20%,25V | 80009 | 283-0479-00 |
| A9C143 | 283-0479-00 | | | CAP,FXD,CER DI:0.47UF,+80-20%,25V | 80009 | 283-0479-00 |
| A9C145 | 283-0479-00 | | | CAP,FXD,CER DI:0.47UF,+80-20%,25V | 80009 | 283-0479-00 |
| A9C147 | 283-0479-00 | | | CAP,FXD,CER DI:0.47UF,+80-20%,25V | 80009 | 283-0479-00 |
| A9C155 | 283-0479-00 | | | CAP,FXD,CER DI:0.47UF,+80-20%,25V | 80009 | 283-0479-00 |
| A9C157 | 283-0479-00 | | | CAP,FXD,CER DI:0.47UF,+80-20%,25V | 80009 | 283-0479-00 |
| A9C163 | 283-0479-00 | | | CAP,FXD,CER DI:0.47UF,+80-20%,25V | 80009 | 283-0479-00 |
| A9C173 | 283-0479-00 | | | CAP,FXD,CER DI:0.47UF,+80-20%,25V | 80009 | 283-0479-00 |
| A9C175 | 283-0479-00 | | | CAP,FXD,CER DI:0.47UF,+80-20%,25V | 80009 | 283-0479-00 |
| A9C177 | 283-0479-00 | | | CAP,FXD,CER DI:0.47UF,+80-20%,25V | 80009 | 283-0479-00 |
| A9C190 | 281-0775-01 | | | CAP,FXD,CER DI:0.1UF,20%,50V | 04222 | SA105E104MAA |
| A9C196 | 281-0775-01 | | | CAP,FXD,CER DI:0.1UF,20%,50V | 04222 | SA105E104MAA |
| A9C218 | 281-0775-01 | | | CAP,FXD,CER DI:0.1UF,20%,50V | 04222 | SA105E104MAA |
| A9C221 | 283-0479-00 | | | CAP,FXD,CER DI:0.47UF,+80-20%,25V | 80009 | 283-0479-00 |
| A9C223 | 283-0479-00 | | | CAP,FXD,CER DI:0.47UF,+80-20%,25V | 80009 | 283-0479-00 |
| A9C225 | 283-0479-00 | | | CAP,FXD,CER DI:0.47UF,+80-20%,25V | 80009 | 283-0479-00 |
| A9C228 | 283-0479-00 | | | CAP,FXD,CER DI:0.47UF,+80-20%,25V | 80009 | 283-0479-00 |
| A9C231 | 283-0479-00 | | | CAP,FXD,CER DI:0.47UF,+80-20%,25V | 80009 | 283-0479-00 |
| A9C243 | 283-0479-00 | | | CAP,FXD,CER DI:0.47UF,+80-20%,25V | 80009 | 283-0479-00 |
| A9C245 | 283-0479-00 | | | CAP,FXD,CER DI:0.47UF,+80-20%,25V | 80009 | 283-0479-00 |
| A9C248 | 283-0479-00 | | | CAP,FXD,CER DI:0.47UF,+80-20%,25V | 80009 | 283-0479-00 |
| A9C251 | 283-0479-00 | | | CAP,FXD,CER DI:0.47UF,+80-20%,25V | 80009 | 283-0479-00 |
| A9C253 | 283-0479-00 | | | CAP,FXD,CER DI:0.47UF,+80-20%,25V | 80009 | 283-0479-00 |
| A9C255 | 283-0479-00 | | | CAP,FXD,CER DI:0.47UF,+80-20%,25V | 80009 | 283-0479-00 |
| A9C258 | 283-0479-00 | | | CAP,FXD,CER DI:0.47UF,+80-20%,25V | 80009 | 283-0479-00 |
| A9C271 | 283-0479-00 | | | CAP,FXD,CER DI:0.47UF,+80-20%,25V | 80009 | 283-0479-00 |
| A9C273 | 283-0479-00 | | | CAP,FXD,CER DI:0.47UF,+80-20%,25V | 80009 | 283-0479-00 |
| A9C275 | 283-0479-00 | | | CAP,FXD,CER DI:0.47UF,+80-20%,25V | 80009 | 283-0479-00 |
| A9C278 | 283-0479-00 | | | CAP,FXD,CER DI:0.47UF,+80-20%,25V | 80009 | 283-0479-00 |
| A9C290 | 281-0775-01 | | | CAP,FXD,CER DI:0.1UF,20%,50V | 04222 | SA105E104MAA |
| A9C296 | 281-0775-01 | | | CAP,FXD,CER DI:0.1UF,20%,50V | 04222 | SA105E104MAA |
| A9C314 | 281-0775-01 | | | CAP,FXD,CER DI:0.1UF,20%,50V | 04222 | SA105E104MAA |
| A9C316 | 283-0479-00 | | | CAP,FXD,CER DI:0.47UF,+80-20%,25V | 80009 | 283-0479-00 |
| A9C321 | 283-0479-00 | | | CAP,FXD,CER DI:0.47UF,+80-20%,25V | 80009 | 283-0479-00 |
| A9C326 | 283-0479-00 | | | CAP,FXD,CER DI:0.47UF,+80-20%,25V | 80009 | 283-0479-00 |
| A9C328 | 283-0479-00 | | | CAP,FXD,CER DI:0.47UF,+80-20%,25V | 80009 | 283-0479-00 |
| A9C336 | 283-0479-00 | | | CAP,FXD,CER DI:0.47UF,+80-20%,25V | 80009 | 283-0479-00 |
| A9C341 | 283-0479-00 | | | CAP,FXD,CER DI:0.47UF,+80-20%,25V | 80009 | 283-0479-00 |
| A9C346 | 283-0479-00 | | | CAP,FXD,CER DI:0.47UF,+80-20%,25V | 80009 | 283-0479-00 |
| A9C351 | 283-0479-00 | | | CAP,FXD,CER DI:0.47UF,+80-20%,25V | 80009 | 283-0479-00 |
| A9C352 | 283-0479-00 | | | CAP,FXD,CER DI:0.47UF,+80-20%,25V | 80009 | 283-0479-00 |
| A9C354 | 283-0479-00 | | | CAP,FXD,CER DI:0.47UF,+80-20%,25V | 80009 | 283-0479-00 |
| A9C364 | 283-0479-00 | | | CAP,FXD,CER DI:0.47UF,+80-20%,25V | 80009 | 283-0479-00 |
| A9C371 | 283-0479-00 | | | CAP,FXD,CER DI:0.47UF,+80-20%,25V | 80009 | 283-0479-00 |

| Component No. | Tektronix Part No. | Serial/Assembly No. Effective | Dscont | Name & Description | Mfr. Code | Mfr. Part No. |
|---|---|---|---|---|---|---|
| A9C375 | 281-0775-01 | | | CAP,FXD,CER DI:0.1UF,20%,50V | 04222 | SA105E104MAA |
| A9C377 | 281-0775-01 | | | CAP,FXD,CER DI:0.1UF,20%,50V | 04222 | SA105E104MAA |
| A9C380 | 281-0775-01 | | | CAP,FXD,CER DI:0.1UF,20%,50V | 04222 | SA105E104MAA |
| A9C384 | 281-0775-01 | | | CAP,FXD,CER DI:0.1UF,20%,50V | 04222 | SA105E104MAA |
| A9C413 | 283-0479-00 | | | CAP,FXD,CER DI:0.47UF,+80-20%,25V | 80009 | 283-0479-00 |
| A9C423 | 283-0479-00 | | | CAP,FXD,CER DI:0.47UF,+80-20%,25V | 80009 | 283-0479-00 |
| A9C425 | 283-0479-00 | | | CAP,FXD,CER DI:0.47UF,+80-20%,25V | 80009 | 283-0479-00 |
| A9C433 | 283-0479-00 | | | CAP,FXD,CER DI:0.47UF,+80-20%,25V | 80009 | 283-0479-00 |
| A9C443 | 283-0479-00 | | | CAP,FXD,CER DI:0.47UF,+80-20%,25V | 80009 | 283-0479-00 |
| A9C453 | 283-0479-00 | | | CAP,FXD,CER DI:0.47UF,+80-20%,25V | 80009 | 283-0479-00 |
| A9C455 | 283-0479-00 | | | CAP,FXD,CER DI:0.47UF,+80-20%,25V | 80009 | 283-0479-00 |
| A9C463 | 283-0479-00 | | | CAP,FXD,CER DI:0.47UF,+80-20%,25V | 80009 | 283-0479-00 |
| A9C472 | 281-0775-01 | | | CAP,FXD,CER DI:0.1UF,20%,50V | 04222 | SA105E104MAA |
| A9C475 | 281-0775-01 | | | CAP,FXD,CER DI:0.1UF,20%,50V | 04222 | SA105E104MAA |
| A9C477 | 281-0775-01 | | | CAP,FXD,CER DI:0.1UF,20%,50V | 04222 | SA105E104MAA |
| A9C486 | 283-0479-00 | | | CAP,FXD,CER DI:0.47UF,+80-20%,25V | 80009 | 283-0479-00 |
| A9C488 | 283-0479-00 | | | CAP,FXD,CER DI:0.47UF,+80-20%,25V | 80009 | 283-0479-00 |
| A9C525 | 281-0775-01 | | | CAP,FXD,CER DI:0.1UF,20%,50V | 04222 | SA105E104MAA |
| A9C532 | 281-0775-01 | | | CAP,FXD,CER DI:0.1UF,20%,50V | 04222 | SA105E104MAA |
| A9C534 | 281-0775-01 | | | CAP,FXD,CER DI:0.1UF,20%,50V | 04222 | SA105E104MAA |
| A9C537 | 281-0775-01 | | | CAP,FXD,CER DI:0.1UF,20%,50V | 04222 | SA105E104MAA |
| A9C543 | 283-0625-00 | | | CAP,FXD,MICA DI:220PF,1%,500V | 80009 | 283-0625-00 |
| A9C545 | 281-0775-01 | | | CAP,FXD,CER DI:0.1UF,20%,50V | 04222 | SA105E104MAA |
| A9C549 | 281-0775-01 | | | CAP,FXD,CER DI:0.1UF,20%,50V | 04222 | SA105E104MAA |
| A9C554 | 281-0775-01 | | | CAP,FXD,CER DI:0.1UF,20%,50V | 04222 | SA105E104MAA |
| A9C565 | 281-0775-01 | | | CAP,FXD,CER DI:0.1UF,20%,50V | 04222 | SA105E104MAA |
| A9C569 | 281-0775-01 | | | CAP,FXD,CER DI:0.1UF,20%,50V | 04222 | SA105E104MAA |
| A9C572 | 281-0775-01 | | | CAP,FXD,CER DI:0.1UF,20%,50V | 04222 | SA105E104MAA |
| A9C592 | 281-0775-01 | | | CAP,FXD,CER DI:0.1UF,20%,50V | 04222 | SA105E104MAA |
| A9C614 | 281-0775-01 | | | CAP,FXD,CER DI:0.1UF,20%,50V | 04222 | SA105E104MAA |
| A9C616 | 281-0775-01 | | | CAP,FXD,CER DI:0.1UF,20%,50V | 04222 | SA105E104MAA |
| A9C628 | 281-0775-01 | | | CAP,FXD,CER DI:0.1UF,20%,50V | 04222 | SA105E104MAA |
| A9C634 | 281-0775-01 | | | CAP,FXD,CER DI:0.1UF,20%,50V | 04222 | SA105E104MAA |
| A9C636 | 281-0775-01 | | | CAP,FXD,CER DI:0.1UF,20%,50V | 04222 | SA105E104MAA |
| A9C639 | 285-1305-00 | | | CAP,FXD,PLASTIC:0.1UF,1%,50V | 80009 | 285-1305-00 |
| A9C644 | 281-0775-01 | | | CAP,FXD,CER DI:0.1UF,20%,50V | 04222 | SA105E104MAA |
| A9C646 | 281-0775-01 | | | CAP,FXD,CER DI:0.1UF,20%,50V | 04222 | SA105E104MAA |
| A9C656 | 281-0775-01 | | | CAP,FXD,CER DI:0.1UF,20%,50V | 04222 | SA105E104MAA |
| A9C664 | 281-0775-01 | | | CAP,FXD,CER DI:0.1UF,20%,50V | 04222 | SA105E104MAA |
| A9C666 | 281-0775-01 | | | CAP,FXD,CER DI:0.1UF,20%,50V | 04222 | SA105E104MAA |
| A9C674 | 281-0775-01 | | | CAP,FXD,CER DI:0.1UF,20%,50V | 04222 | SA105E104MAA |
| A9C678 | 281-0775-01 | | | CAP,FXD,CER DI:0.1UF,20%,50V | 04222 | SA105E104MAA |
| A9C684 | 281-0775-01 | | | CAP,FXD,CER DI:0.1UF,20%,50V | 04222 | SA105E104MAA |
| A9C722 | 281-0775-01 | | | CAP,FXD,CER DI:0.1UF,20%,50V | 04222 | SA105E104MAA |
| A9C723 | 283-0594-00 | | | CAP,FXD,MICA DI:0.001UF,1%,100V | 80009 | 283-0594-00 |
| A9C724 | 281-0775-01 | | | CAP,FXD,CER DI:0.1UF,20%,50V | 04222 | SA105E104MAA |
| A9C733 | 283-0620-00 | | | CAP,FXD,MICA DI:470PF,1%,500V | 80009 | 283-0620-00 |
| A9C742 | 281-0775-01 | | | CAP,FXD,CER DI:0.1UF,20%,50V | 04222 | SA105E104MAA |
| A9C743 | 283-0811-00 | | | CAP,FXD,CER DI:0.01UF,20%,100V | 80009 | 283-0811-00 |
| A9C745 | 283-0811-00 | | | CAP,FXD,CER DI:0.01UF,20%,100V | 80009 | 283-0811-00 |
| A9C752 | 281-0775-01 | | | CAP,FXD,CER DI:0.1UF,20%,50V | 04222 | SA105E104MAA |
| A9C753 | 281-0814-00 | | | CAP,FXD,CER DI:100 PF,10%,100V | 80009 | 281-0814-00 |
| A9C756 | 281-0775-01 | | | CAP,FXD,CER DI:0.1UF,20%,50V | 04222 | SA105E104MAA |
| A9C763 | 281-0775-01 | | | CAP,FXD,CER DI:0.1UF,20%,50V | 04222 | SA105E104MAA |
| A9C764 | 281-0775-01 | | | CAP,FXD,CER DI:0.1UF,20%,50V | 04222 | SA105E104MAA |
| A9C766 | 281-0775-01 | | | CAP,FXD,CER DI:0.1UF,20%,50V | 04222 | SA105E104MAA |
| A9C768 | 283-0204-00 | | | CAP,FXD,CER DI:0.01UF,20%,50V | 51406 | RPE110Z5U103M50V |
| A9C772 | 281-0775-01 | | | CAP,FXD,CER DI:0.1UF,20%,50V | 04222 | SA105E104MAA |
| A9C774 | 281-0775-01 | | | CAP,FXD,CER DI:0.1UF,20%,50V | 04222 | SA105E104MAA |

| Component No. | Tektronix Part No. | Serial/Assembly No. Effective | Dscont | Name & Description | Mfr. Code | Mfr. Part No. |
|---|---|---|---|---|---|---|
| A9C776 | 281-0775-01 | | | CAP,FXD,CER DI:0.1UF,20%,50V | 04222 | SA105E104MAA |
| A9C778 | 283-0811-00 | | | CAP,FXD,CER DI:0.01UF,20%,100V | 80009 | 283-0811-00 |
| A9C788 | 283-0479-00 | | | CAP,FXD,CER DI:0.47UF,+80-20%,25V | 80009 | 283-0479-00 |
| A9C827 | 281-0775-01 | | | CAP,FXD,CER DI:0.1UF,20%,50V | 04222 | SA105E104MAA |
| A9C829 | 281-0775-01 | | | CAP,FXD,CER DI:0.1UF,20%,50V | 04222 | SA105E104MAA |
| A9C836 | 281-0775-01 | | | CAP,FXD,CER DI:0.1UF,20%,50V | 04222 | SA105E104MAA |
| A9C838 | 281-0775-01 | | | CAP,FXD,CER DI:0.1UF,20%,50V | 04222 | SA105E104MAA |
| A9C846 | 281-0775-01 | | | CAP,FXD,CER DI:0.1UF,20%,50V | 04222 | SA105E104MAA |
| A9C856 | 281-0775-01 | | | CAP,FXD,CER DI:0.1UF,20%,50V | 04222 | SA105E104MAA |
| A9C858 | 281-0775-01 | | | CAP,FXD,CER DI:0.1UF,20%,50V | 04222 | SA105E104MAA |
| A9C864 | 281-0775-01 | | | CAP,FXD,CER DI:0.1UF,20%,50V | 04222 | SA105E104MAA |
| A9C872 | 290-1107-00 | | | CAP,FXD,ELCTLT:10UF,20%,50V | 80009 | 290-1107-00 |
| A9C875 | 281-0775-01 | | | CAP,FXD,CER DI:0.1UF,20%,50V | 04222 | SA105E104MAA |
| A9C882 | 290-0747-00 | | | CAP,FXD,ELCTLT:100UF,+50-20%,25WVDC | 24165 | 516D107M025LM7B |
| A9C885 | 290-0747-00 | | | CAP,FXD,ELCTLT:100UF,+50-20%,25WVDC | 24165 | 516D107M025LM7B |
| A9C888 | 290-0966-00 | | | CAP,FXD,ELCTLT:220UF,+50-20%,25V | 55680 | TLB1E221MAA |
| A9C912 | 283-0811-00 | | | CAP,FXD,CER DI:0.01UF,20%,100V | 80009 | 283-0811-00 |
| A9C913 | 283-0479-00 | | | CAP,FXD,CER DI:0.47UF,+80-20%,25V | 80009 | 283-0479-00 |
| A9C914 | 283-0811-00 | | | CAP,FXD,CER DI:0.01UF,20%,100V | 80009 | 283-0811-00 |
| A9C918 | 290-0986-00 | | | CAP,FXD,ELCTLT:47UF,20%,50V | 55680 | TLB1H470MAA |
| A9C922 | 283-0479-00 | | | CAP,FXD,CER DI:0.47UF,+80-20%,25V | 80009 | 283-0479-00 |
| A9C926 | 281-0775-01 | | | CAP,FXD,CER DI:0.1UF,20%,50V | 04222 | SA105E104MAA |
| A9C928 | 290-0986-00 | | | CAP,FXD,ELCTLT:47UF,20%,50V | 55680 | TLB1H470MAA |
| A9C936 | 281-0775-01 | | | CAP,FXD,CER DI:0.1UF,20%,50V | 04222 | SA105E104MAA |
| A9C952 | 281-0775-01 | | | CAP,FXD,CER DI:0.1UF,20%,50V | 04222 | SA105E104MAA |
| A9C966 | 281-0775-01 | | | CAP,FXD,CER DI:0.1UF,20%,50V | 04222 | SA105E104MAA |
| A9C974 | 281-0775-01 | | | CAP,FXD,CER DI:0.1UF,20%,50V | 04222 | SA105E104MAA |
| A9CR738 | 152-0141-02 | | | DIODE,SIG:,ULTRA FAST;40V,150MA,4NS,2PF;1N4152,DO-35,T&R | 80009 | 152-0141-02 |
| A9CR746 | 152-0141-02 | | | DIODE,SIG:,ULTRA FAST;40V,150MA,4NS,2PF;1N4152,DO-35,T&R | 80009 | 152-0141-02 |
| A9F494 | 159-0193-00 | | | FUSE,WIRE LEAD:10A,125V,5 SEC | 61857 | SP5-10A |
| A9J712 | 131-1425-00 | | | CONN,HDR:PCB,;MALE,RTANG,1 X 36,0.1 CTR,0.230 MLG X 0.090 TAIL,30 GOLD,STACKABLE;,, | 22526 | 65521-136 |
| A9J712 | 131-1426-00 | | | CONN,HDR:PCB,;MALE,RTANG,1 X 36,0.1 CTR,0.23 MLG X 0.195 TAIL,GOLD,STACKABLE;,, | 22526 | 65524-136 |
| A9J822 | 131-4048-00 | | | CONN,HDR: | 80009 | 131-4048-00 |
| | | | | *MOUNTING PARTS* | | |
| | 210-0001-00 | | | WASHER,LOCK:#2 INTL,0.013 THK,STL (QUANTITY 2) | 77900 | 1202-00-00-0541C |
| | 210-0405-00 | | | NUT,PLAIN,HEX:2-56 X 0.188,BRS CD PL (QUANTITY 2) | 73743 | 12157-50 |
| | 211-0185-00 | | | SCREW,MACHINE:2-56 X 0.438,PNH,STL (QUANTITY 2) | TK0435 | ORDER BY DESCR |
| | | | | *END MOUNTING PARTS* | | |
| A9P395 | 131-3517-00 | | | CONN,DIN:PCB,;FEMALE,RTANG,3 X 50,0.1 CTR,0.504 MLG X 0.118 TAIL,30 GOLD;,, | 80009 | 131-3517-00 |
| A9Q714 | 151-0188-00 | | | TRANSISTOR,SIG:BIPOLAR,PNP;40V,200MA,250MHZ,AMPLIFIER;2N3906,TO-92 EBC | 80009 | 151-0188-00 |
| A9Q716 | 151-0188-00 | | | TRANSISTOR,SIG:BIPOLAR,PNP;40V,200MA,250MHZ,AMPLIFIER;2N3906,TO-92 EBC | 80009 | 151-0188-00 |
| A9Q724 | 151-0188-00 | | | TRANSISTOR,SIG:BIPOLAR,PNP;40V,200MA,250MHZ,AMPLIFIER;2N3906,TO-92 EBC | 80009 | 151-0188-00 |
| A9Q726 | 151-0188-00 | | | TRANSISTOR,SIG:BIPOLAR,PNP;40V,200MA,250MHZ,AMPLIFIER;2N3906,TO-92 EBC | 80009 | 151-0188-00 |
| A9Q736 | 151-0188-00 | | | TRANSISTOR,SIG:BIPOLAR,PNP;40V,200MA,250MHZ,AMPLIFIER;2N3906,TO-92 EBC | 80009 | 151-0188-00 |
| A9Q737 | 151-0188-00 | | | TRANSISTOR,SIG:BIPOLAR,PNP;40V,200MA,250MHZ,AMPLIFIER;2N3906,TO-92 EBC | 80009 | 151-0188-00 |

| Component No. | Tektronix Part No. | Serial/Assembly No. Effective | Dscont | Name & Description | Mfr. Code | Mfr. Part No. |
|---|---|---|---|---|---|---|
| A9Q745 | 151-0188-00 | | | TRANSISTOR,SIG:BIPOLAR,PNP;40V,200MA,250MHZ ,AMPLIFIER;2N3906,TO-92 EBC | 80009 | 151-0188-00 |
| A9Q874 | 151-0190-00 | | | TRANSISTOR,SIG:BIPOLAR,NPN;40V,200MA,300MHZ ,AMPLIFIER;2N3904,TO-92 EBC | 80009 | 151-0190-00 |
| A9Q875 | 151-0190-00 | | | TRANSISTOR,SIG:BIPOLAR,NPN;40V,200MA,300MHZ ,AMPLIFIER;2N3904,TO-92 EBC | 80009 | 151-0190-00 |
| A9R181 | 307-0650-00 | | | RES NTWK,FXD,FI:9,2.7K OHM,5%,0.150W | 11236 | 750-101-R2.7K |
| A9R191 | 307-0650-00 | | | RES NTWK,FXD,FI:9,2.7K OHM,5%,0.150W | 11236 | 750-101-R2.7K |
| A9R281 | 307-0650-00 | | | RES NTWK,FXD,FI:9,2.7K OHM,5%,0.150W | 11236 | 750-101-R2.7K |
| A9R291 | 307-0650-00 | | | RES NTWK,FXD,FI:9,2.7K OHM,5%,0.150W | 11236 | 750-101-R2.7K |
| A9R398 | 307-0828-00 | | | RES NTWK,FXD,FI:4,33 OHM,2%,0.30W | 32997 | 4308R-102-330 |
| A9R514 | 307-0598-00 | | | RES NTWK,FXD,FI:7,330 OHM,2%,1.0W | 80009 | 307-0598-00 |
| A9R524 | 307-1187-00 | | | RES NTWK,FXD,FI:33 OHM,2%,1.25W | 80009 | 307-1187-00 |
| A9R526 | 307-1187-00 | | | RES NTWK,FXD,FI:33 OHM,2%,1.25W | 80009 | 307-1187-00 |
| A9R542 | 315-0101-00 | | | RES,FXD,FILM:100 OHM,5%,0.25W | 80009 | 315-0101-00 |
| A9R562 | 307-0528-00 | | | RES NTWK,FXD,FI:(7)39 OHM,20%,0.125W | 80009 | 307-0528-00 |
| A9R564 | 307-0528-00 | | | RES NTWK,FXD,FI:(7)39 OHM,20%,0.125W | 80009 | 307-0528-00 |
| A9R572 | 307-0649-00 | | | RES NTWK,FXD,FI:8,33 OHM,2%,0.125W | 80009 | 307-0649-00 |
| A9R612 | 311-1283-00 | | | RES,VAR,NONWW:TRMR,10K OHM,0.5W | 32997 | 3329S-L58-103 |
| A9R614 | 315-0222-00 | | | RES,FXD,FILM:2.2K OHM,5%,0.25W | 80009 | 315-0222-00 |
| A9R615 | 311-1283-00 | | | RES,VAR,NONWW:TRMR,10K OHM,0.5W | 32997 | 3329S-L58-103 |
| A9R636 | 315-0102-00 | | | RES,FXD,FILM:1K OHM,5%,0.25W | 80009 | 315-0102-00 |
| A9R637 | 315-0102-00 | | | RES,FXD,FILM:1K OHM,5%,0.25W | 80009 | 315-0102-00 |
| A9R723 | 315-0102-00 | | | RES,FXD,FILM:1K OHM,5%,0.25W | 80009 | 315-0102-00 |
| A9R724 | 315-0102-00 | | | RES,FXD,FILM:1K OHM,5%,0.25W | 80009 | 315-0102-00 |
| A9R725 | 315-0102-00 | | | RES,FXD,FILM:1K OHM,5%,0.25W | 80009 | 315-0102-00 |
| A9R726 | 315-0102-00 | | | RES,FXD,FILM:1K OHM,5%,0.25W | 80009 | 315-0102-00 |
| A9R727 | 315-0102-00 | | | RES,FXD,FILM:1K OHM,5%,0.25W | 80009 | 315-0102-00 |
| A9R728 | 307-0598-00 | | | RES NTWK,FXD,FI:7,330 OHM,2%,1.0W | 80009 | 307-0598-00 |
| A9R732 | 321-1712-06 | | | RES,FXD,FILM:4.4K OHM,0.25%,0.125W,TC=T9 | 07716 | CEAE440000C |
| A9R737 | 322-3114-00 | | | RES,FXD:METAL FILM;150 OHM,1%,0.2W,TC=100 P PM;AXIAL,T&R,SMALL BODY | 91637 | CCF50-2-G1500F |
| A9R742 | 322-3289-00 | | | RES,FXD:METAL FILM;10K OHM,1%,0.2W,TC=100 P PM;AXIAL,T&R,SMALL BODY | 80009 | 322-3289-00 |
| A9R745 | 322-3222-00 | | | RES,FXD:METAL FILM;2K OHM,1%,0.2W,TC=100 PP M;AXIAL,T&R,SMALL BODY | 57668 | CRB20 FXE 2K00 |
| A9R746 | 322-3222-00 | | | RES,FXD:METAL FILM;2K OHM,1%,0.2W,TC=100 PP M;AXIAL,T&R,SMALL BODY | 57668 | CRB20 FXE 2K00 |
| A9R747 | 322-3181-00 | | | RES,FXD,FILM:750 OHM,1%,0.2W,TC=T0 | 80009 | 322-3181-00 |
| A9R748 | 323-0126-00 | | | RES,FXD,FILM:200 OHM,1%,0.5W,TC=T0 | 75042 | CECT0-2000F |
| A9R749 | 323-0126-00 | | | RES,FXD,FILM:200 OHM,1%,0.5W,TC=T0 | 75042 | CECT0-2000F |
| A9R753 | 322-3289-00 | | | RES,FXD:METAL FILM;10K OHM,1%,0.2W,TC=100 P PM;AXIAL,T&R,SMALL BODY | 80009 | 322-3289-00 |
| A9R754 | 322-3289-00 | | | RES,FXD:METAL FILM;10K OHM,1%,0.2W,TC=100 P PM;AXIAL,T&R,SMALL BODY | 80009 | 322-3289-00 |
| A9R755 | 322-3289-00 | | | RES,FXD:METAL FILM;10K OHM,1%,0.2W,TC=100 P PM;AXIAL,T&R,SMALL BODY | 80009 | 322-3289-00 |
| A9R756 | 322-3222-00 | | | RES,FXD:METAL FILM;2K OHM,1%,0.2W,TC=100 PP M;AXIAL,T&R,SMALL BODY | 57668 | CRB20 FXE 2K00 |
| A9R757 | 322-3222-00 | | | RES,FXD:METAL FILM;2K OHM,1%,0.2W,TC=100 PP M;AXIAL,T&R,SMALL BODY | 57668 | CRB20 FXE 2K00 |
| A9R758 | 315-0152-00 | | | RES,FXD,FILM:1.5K OHM,5%,0.25W | 80009 | 315-0152-00 |
| A9R762 | 315-0472-00 | | | RES,FXD,FILM:4.7K OHM,5%,0.25W | 80009 | 315-0472-00 |
| A9R766 | 315-0102-00 | | | RES,FXD,FILM:1K OHM,5%,0.25W | 80009 | 315-0102-00 |
| A9R778 | 315-0330-00 | | | RES,FXD,FILM:33 OHM,5%,0.25W | 80009 | 315-0330-00 |
| A9R798 | 315-0330-00 | | | RES,FXD,FILM:33 OHM,5%,0.25W | 80009 | 315-0330-00 |
| A9R822 | 307-1187-00 | | | RES NTWK,FXD,FI:33 OHM,2%,1.25W | 80009 | 307-1187-00 |
| A9R824 | 307-1187-00 | | | RES NTWK,FXD,FI:33 OHM,2%,1.25W | 80009 | 307-1187-00 |
| A9R826 | 307-1187-00 | | | RES NTWK,FXD,FI:33 OHM,2%,1.25W | 80009 | 307-1187-00 |

| Component No. | Tektronix Part No. | Serial/Assembly No. Effective | Dscont | Name & Description | Mfr. Code | Mfr. Part No. |
|---|---|---|---|---|---|---|
| A9R832 | 323-0085-00 | | | RES,FXD,FILM:75.0 OHM,1%,0.5W,TC=T0 | 80009 | 323-0085-00 |
| A9R842 | 307-0650-00 | | | RES NTWK,FXD,FI:9,2.7K OHM,5%,0.150W | 11236 | 750-101-R2.7K |
| A9R855 | 307-0824-00 | | | RES NTWK,FXD,FI:4,150 OHM,2%,0.3W EACH | 91637 | CSC08A-03-151G |
| A9R856 | 307-0824-00 | | | RES NTWK,FXD,FI:4,150 OHM,2%,0.3W EACH | 91637 | CSC08A-03-151G |
| A9R874 | 307-0540-00 | | | RES NTWK,FXD,FI:(5)1K OHM,2%,0.7W | 91637 | CSC06A-01-102G |
| A9R875 | 307-0540-00 | | | RES NTWK,FXD,FI:(5)1K OHM,2%,0.7W | 91637 | CSC06A-01-102G |
| A9R878 | 307-0650-00 | | | RES NTWK,FXD,FI:9,2.7K OHM,5%,0.150W' | 11236 | 750-101-R2.7K |
| A9R932 | 315-0102-00 | | | RES,FXD,FILM:1K OHM,5%,0.25W | 80009 | 315-0102-00 |
| A9R933 | 315-0330-00 | | | RES,FXD,FILM:33 OHM,5%,0.25W | 80009 | 315-0330-00 |
| A9R944 | 307-0650-00 | | | RES NTWK,FXD,FI:9,2.7K OHM,5%,0.150W | 11236 | 750-101-R2.7K |
| A9R945 | 315-0330-00 | | | RES,FXD,FILM:33 OHM,5%,0.25W | 80009 | 315-0330-00 |
| A9R946 | 315-0330-00 | | | RES,FXD,FILM:33 OHM,5%,0.25W | 80009 | 315-0330-00 |
| A9R951 | 315-0332-00 | | | RES,FXD,FILM:3.3K OHM,5%,0.25W | 80009 | 315-0332-00 |
| A9R954 | 307-0650-00 | | | RES NTWK,FXD,FI:9,2.7K OHM,5%,0.150W | 11236 | 750-101-R2.7K |
| A9R964 | 307-0445-00 | | | RES,NTWK:THICK FILM;(9) 4.7K OHM,2%,0.2W EACH,TC=100 PPM;SIP10,PIN 1 COMMON | 91637 | MSP10A01472GD03 |
| A9R964 | 315-0330-00 | | | RES,FXD,FILM:33 OHM,5%,0.25W | 80009 | 315-0330-00 |
| A9TP114 | 214-4085-00 | | | TERM,TEST POINT:0.070 ID,0.220 H,0.063 DIA PCB,0.015 X 0.032 BRASS,W/ RED NYLON COLLAR | 26364 | 104-01-02 |
| A9TP382 | 214-4085-00 | | | TERM,TEST POINT:0.070 ID,0.220 H,0.063 DIA PCB,0.015 X 0.032 BRASS,W/ RED NYLON COLLAR | 26364 | 104-01-02 |
| A9TP515 | 214-4085-00 | | | TERM,TEST POINT:0.070 ID,0.220 H,0.063 DIA PCB,0.015 X 0.032 BRASS,W/ RED NYLON COLLAR | 26364 | 104-01-02 |
| A9TP819 | 214-4085-00 | | | TERM,TEST POINT:0.070 ID,0.220 H,0.063 DIA PCB,0.015 X 0.032 BRASS,W/ RED NYLON COLLAR | 26364 | 104-01-02 |
| A9TP969 | 214-4085-00 | | | TERM,TEST POINT:0.070 ID,0.220 H,0.063 DIA PCB,0.015 X 0.032 BRASS,W/ RED NYLON COLLAR | 26364 | 104-01-02 |
| A9U124 | 156-3011-00 | | | IC,MEMORY:CMOS,DRAM;256K X 4, 120NS;514256, DIP20.3, | 80009 | 156-3011-00 |
| | | | | *MOUNTING PARTS* | | |
| | 136-0752-00 | | | SKT,PL-IN ELEK:MICROCIRCUIT,20 DIP | 09922 | DILB20P-108 |
| | | | | *END MOUNTING PARTS* | | |
| A9U126 | 156-3011-00 | | | IC,MEMORY:CMOS,DRAM;256K X 4, 120NS;514256, DIP20.3, | 80009 | 156-3011-00 |
| | | | | *MOUNTING PARTS* | | |
| | 136-0752-00 | | | SKT,PL-IN ELEK:MICROCIRCUIT',20 DIP | 09922 | DILB20P-108 |
| | | | | *END MOUNTING PARTS* | | |
| A9U128 | 156-3011-00 | | | IC,MEMORY:CMOS,DRAM;256K X 4, 120NS;514256, DIP20.3, | 80009 | 156-3011-00 |
| | | | | *MOUNTING PARTS* | | |
| | 136-0752-00 | | | SKT,PL-IN ELEK:MICROCIRCUIT,20 DIP | 09922 | DILB20P-108 |
| | | | | *END MOUNTING PARTS* | | |
| A9U134 | 156-3011-00 | | | IC,MEMORY:CMOS,DRAM;256K X 4, 120NS;514256, DIP20.3, | 80009 | 156-3011-00 |
| | | | | *MOUNTING PARTS* | | |
| | 136-0752-00 | | | SKT,PL-IN ELEK:MICROCIRCUIT,20 DIP | 09922 | DILB20P-108 |
| | | | | *END MOUNTING PARTS* | | |
| A9U136 | 156-3011-00 | | | IC,MEMORY:CMOS,DRAM;256K X 4, 120NS;514256, DIP20.3, | 80009 | 156-3011-00 |
| | | | | *MOUNTING PARTS* | | |
| | 136-0752-00 | | | SKT,PL-IN ELEK:MICROCIRCUIT,20 DIP | 09922 | DILB20P-108 |
| | | | | *END MOUNTING PARTS* | | |
| A9U138 | 156-3011-00 | | | IC,MEMORY:CMOS,DRAM;256K X 4, 120NS;514256, DIP20.3, | 80009 | 156-3011-00 |
| | | | | *MOUNTING PARTS* | | |
| | 136-0752-00 | | | SKT,PL-IN ELEK:MICROCIRCUIT,20 DIP | 09922 | DILB20P-108 |
| | | | | *END MOUNTING PARTS* | | |
| A9U154 | 156-3011-00 | | | IC,MEMORY:CMOS,DRAM;256K X 4, 120NS;514256, DIP20.3, | 80009 | 156-3011-00 |
| | | | | *MOUNTING PARTS* | | |
| | 136-0752-00 | | | SKT,PL-IN ELEK:MICROCIRCUIT,20 DIP | 09922 | DILB20P-108 |

| Component No. | Tektronix Part No. | Serial/Assembly No. Effective | Dscont | Name & Description | Mfr. Code | Mfr. Part No. |
|---|---|---|---|---|---|---|
| | | | | *END MOUNTING PARTS* | | |
| A9U156 | 156-3011-00 | | | IC,MEMORY:CMOS,DRAM;256K X 4, 120NS;514256, DIP20.3, | 80009 | 156-3011-00 |
| | | | | *MOUNTING PARTS* | | |
| | 136-0752-00 | | | SKT,PL-IN ELEK:MICROCIRCUIT,20 DIP | 09922 | DILB20P-108 |
| | | | | *END MOUNTING PARTS* | | |
| A9U158 | 156-3011-00 | | | IC,MEMORY:CMOS,DRAM;256K X 4, 120NS;514256, DIP20.3, | 80009 | 156-3011-00 |
| | | | | *MOUNTING PARTS* | | |
| | 136-0752-00 | | | SKT,PL-IN ELEK:MICROCIRCUIT,20 DIP | 09922 | DILB20P-108 |
| | | | | *END MOUNTING PARTS* | | |
| A9U164 | 156-3011-00 | | | IC,MEMORY:CMOS,DRAM;256K X 4, 120NS;514256, DIP20.3, | 80009 | 156-3011-00 |
| | | | | *MOUNTING PARTS* | | |
| | 136-0752-00 | | | SKT,PL-IN ELEK:MICROCIRCUIT,20 DIP | 09922 | DILB20P-108 |
| | | | | *END MOUNTING PARTS* | | |
| A9U166 | 156-3011-00 | | | IC,MEMORY:CMOS,DRAM;256K X 4, 120NS;514256, DIP20.3, | 80009 | 156-3011-00 |
| | | | | *MOUNTING PARTS* | | |
| | 136-0752-00 | | | SKT,PL-IN ELEK:MICROCIRCUIT,20 DIP | 09922 | DILB20P-108 |
| | | | | *END MOUNTING PARTS* | | |
| A9U168 | 156-3011-00 | | | IC,MEMORY:CMOS,DRAM;256K X 4, 120NS;514256, DIP20.3, | 80009 | 156-3011-00 |
| | | | | *MOUNTING PARTS* | | |
| | 136-0752-00 | | | SKT,PL-IN ELEK:MICROCIRCUIT,20 DIP | 09922 | DILB20P-108 |
| | | | | *END MOUNTING PARTS* | | |
| A9U184 | 156-1748-02 | | | IC,DIGITAL:ALSTTL,TRANSCEIVER;OCTAL NONINV, 3-STATE;74ALS245,DIP20.3,TUBE | 01295 | SN74ALS245AN3 |
| | | | | *MOUNTING PARTS* | | |
| | 136-0752-00 | | | SKT,PL-IN ELEK:MICROCIRCUIT,20 DIP | 09922 | DILB20P-108 |
| | | | | *END MOUNTING PARTS* | | |
| A9U194 | 156-1748-02 | | | IC,DIGITAL:ALSTTL,TRANSCEIVER;OCTAL NONINV, 3-STATE;74ALS245,DIP20.3,TUBE | 01295 | SN74ALS245AN3 |
| | | | | *MOUNTING PARTS* | | |
| | 136-0752-00 | | | SKT,PL-IN ELEK:MICROCIRCUIT,20 DIP | 09922 | DILB20P-108 |
| | | | | *END MOUNTING PARTS* | | |
| A9U216 | 156-2073-00 | | | IC,DIGITAL:ASTTL,MUX;8-TO-1 DATA SELECTOR;74AS151,DIP16.3,TUBE | 01295 | SN74AS151N3 |
| A9U222 | 156-3011-00 | | | IC,MEMORY:CMOS,DRAM;256K X 4, 120NS;514256, DIP20.3, | 80009 | 156-3011-00 |
| | | | | *MOUNTING PARTS* | | |
| | 136-0752-00 | | | SKT,PL-IN ELEK:MICROCIRCUIT,20 DIP | 09922 | DILB20P-108 |
| | | | | *END MOUNTING PARTS* | | |
| A9U224 | 156-3011-00 | | | IC,MEMORY:CMOS,DRAM;256K X 4, 120NS;514256, DIP20.3, | 80009 | 156-3011-00 |
| | | | | *MOUNTING PARTS* | | |
| | 136-0752-00 | | | SKT,PL-IN ELEK:MICROCIRCUIT,20 DIP | 09922 | DILB20P-108 |
| | | | | *END MOUNTING PARTS* | | |
| A9U226 | 156-3011-00 | | | IC,MEMORY:CMOS,DRAM;256K X 4, 120NS;514256, DIP20.3, | 80009 | 156-3011-00 |
| | | | | *MOUNTING PARTS* | | |
| | 136-0752-00 | | | SKT,PL-IN ELEK:MICROCIRCUIT,20 DIP | 09922 | DILB20P-108 |
| | | | | *END MOUNTING PARTS* | | |
| A9U232 | 156-3011-00 | | | IC,MEMORY:CMOS,DRAM;256K X 4, 120NS;514256, DIP20.3, | 80009 | 156-3011-00 |
| | | | | *MOUNTING PARTS* | | |
| | 136-0752-00 | | | SKT,PL-IN ELEK:MICROCIRCUIT,20 DIP | 09922 | DILB20P-108 |
| | | | | *END MOUNTING PARTS* | | |
| A9U234 | 156-3011-00 | | | IC,MEMORY:CMOS,DRAM;256K X 4, 120NS;514256, DIP20.3, | 80009 | 156-3011-00 |
| | | | | *MOUNTING PARTS* | | |
| | 136-0752-00 | | | SKT,PL-IN ELEK:MICROCIRCUIT,20 DIP | 09922 | DILB20P-108 |
| | | | | *END MOUNTING PARTS* | | |

| Component No. | Tektronix Part No. | Serial/Assembly No. Effective | Dscont | Name & Description | Mfr. Code | Mfr. Part No. |
|---|---|---|---|---|---|---|
| A9U236 | 156-3011-00 | | | IC,MEMORY:CMOS,DRAM;256K X 4, 120NS;514256, DIP20.3, | 80009 | 156-3011-00 |
| | | | | *MOUNTING PARTS* | | |
| | 136-0752-00 | | | SKT,PL-IN ELEK:MICROCIRCUIT,20 DIP | 09922 | DILB20P-108 |
| | | | | *END MOUNTING PARTS* | | |
| A9U252 | 156-3011-00 | | | IC,MEMORY:CMOS,DRAM;256K X 4, 120NS;514256, DIP20.3, | 80009 | 156-3011-00 |
| | | | | *MOUNTING PARTS* | | |
| | 136-0752-00 | | | SKT,PL-IN ELEK:MICROCIRCUIT,20 DIP | 09922 | DILB20P-108 |
| | | | | *END MOUNTING PARTS* | | |
| A9U254 | 156-3011-00 | | | IC,MEMORY:CMOS,DRAM;256K X 4, 120NS;514256, DIP20.3, | 80009 | 156-3011-00 |
| | | | | *MOUNTING PARTS* | | |
| | 136-0752-00 | | | SKT,PL-IN ELEK:MICROCIRCUIT,20 DIP | 09922 | DILB20P-108 |
| | | | | *END MOUNTING PARTS* | | |
| A9U256 | 156-3011-00 | | | IC,MEMORY:CMOS,DRAM;256K X 4, 120NS;514256, DIP20.3, | 80009 | 156-3011-00 |
| | | | | *MOUNTING PARTS* | | |
| | 136-0752-00 | | | SKT,PL-IN ELEK:MICROCIRCUIT,20 DIP | 09922 | DILB20P-108 |
| | | | | *END MOUNTING PARTS* | | |
| A9U262 | 156-3011-00 | | | IC,MEMORY:CMOS,DRAM;256K X 4, 120NS;514256, DIP20.3, | 80009 | 156-3011-00 |
| | | | | *MOUNTING PARTS* | | |
| | 136-0752-00 | | | SKT,PL-IN ELEK:MICROCIRCUIT,20 DIP | 09922 | DILB20P-108 |
| | | | | *END MOUNTING PARTS* | | |
| A9U264 | 156-3011-00 | | | IC,MEMORY:CMOS,DRAM;256K X 4, 120NS;514256, DIP20.3, | 80009 | 156-3011-00 |
| | | | | *MOUNTING PARTS* | | |
| | 136-0752-00 | | | SKT,PL-IN ELEK:MICROCIRCUIT,20 DIP | 09922 | DILB20P-108 |
| | | | | *END MOUNTING PARTS* | | |
| A9U266 | 156-3011-00 | | | IC,MEMORY:CMOS,DRAM;256K X 4, 120NS;514256, DIP20.3, | 80009 | 156-3011-00 |
| | | | | *MOUNTING PARTS* | | |
| | 136-0752-00 | | | SKT,PL-IN ELEK:MICROCIRCUIT,20 DIP | 09922 | DILB20P-108 |
| | | | | *END MOUNTING PARTS* | | |
| A9U284 | 156-1748-02 | | | IC,DIGITAL:ALSTTL,TRANSCEIVER;OCTAL NONINV, 3-STATE;74ALS245,DIP20.3,TUBE | 01295 | SN74ALS245AN3 |
| | | | | *MOUNTING PARTS* | | |
| | 136-0752-00 | | | SKT,PL-IN ELEK:MICROCIRCUIT,20 DIP | 09922 | DILB20P-108 |
| | | | | *END MOUNTING PARTS* | | |
| A9U288 | 160-6093-00 | | | MICROCKT,DGTL:OCTAL 20 INP,LOGIC ARRAY,PRGM | 80009 | 160-6093-00 |
| | | | | *MOUNTING PARTS* | | |
| | 136-0925-00 | | | SOCKET,DIP:: | 91506 | 224-AG30D |
| | | | | *END MOUNTING PARTS* | | |
| A9U294 | 156-1748-02 | | | IC,DIGITAL:ALSTTL,TRANSCEIVER;OCTAL NONINV, 3-STATE;74ALS245,DIP20.3,TUBE | 01295 | SN74ALS245AN3 |
| | | | | *MOUNTING PARTS* | | |
| | 136-0752-00 | | | SKT,PL-IN ELEK:MICROCIRCUIT,20 DIP | 09922 | DILB20P-108 |
| | | | | *END MOUNTING PARTS* | | |
| A9U312 | 156-2073-00 | | | IC,DIGITAL:ASTTL,MUX;8-TO-1 DATA SELECTOR;74AS151,DIP16.3,TUBE | 01295 | SN74AS151N3 |
| A9U318 | 156-2978-00 | | | MICROCKT,DGTL:NMOS,65536 X 4 DUAL PORT DRAM | 4T165 | UPD41264-12 |
| | | | | *MOUNTING PARTS* | | |
| | 136-0977-00 | | | SOCKET,DIP:: | 63058 | DIP 424-003B-F |
| | | | | *END MOUNTING PARTS* | | |
| A9U320 | 156-3011-00 | | | IC,MEMORY:CMOS,DRAM;256K X 4, 120NS;514256, DIP20.3, | 80009 | 156-3011-00 |
| | | | | *MOUNTING PARTS* | | |
| | 136-0752-00 | | | SKT,PL-IN ELEK:MICROCIRCUIT,20 DIP | 09922 | DILB20P-108 |
| | | | | *END MOUNTING PARTS* | | |
| A9U322 | 156-3011-00 | | | IC,MEMORY:CMOS,DRAM;256K X 4, 120NS;514256, DIP20.3, | 80009 | 156-3011-00 |
| | | | | *MOUNTING PARTS* | | |

| Component No. | Tektronix Part No. | Serial/Assembly No. Effective | Dscont | Name & Description | Mfr. Code | Mfr. Part No. |
|---|---|---|---|---|---|---|
| | 136-0752-00 | | | SKT,PL-IN ELEK:MICROCIRCUIT,20 DIP<br>*END MOUNTING PARTS* | 09922 | DILB20P-108 |
| A9U326 | 156-2978-00 | | | MICROCKT,DGTL:NMOS,65536 X 4 DUAL PORT DRAM<br>*MOUNTING PARTS* | 4T165 | UPD41264-12 |
| | 136-0977-00 | | | SOCKET,DIP::<br>*END MOUNTING PARTS* | 63058 | DIP 424-003B-F |
| A9U328 | 156-2978-00 | | | MICROCKT,DGTL:NMOS,65536 X 4 DUAL PORT DRAM<br>*MOUNTING PARTS* | 4T165 | UPD41264-12 |
| | 136-0977-00 | | | SOCKET,DIP::<br>*END MOUNTING PARTS* | 63058 | DIP 424-003B-F |
| A9U330 | 156-3011-00 | | | IC,MEMORY:CMOS,DRAM;256K X 4, 120NS;514256, DIP20.3,<br>*MOUNTING PARTS* | 80009 | 156-3011-00 |
| | 136-0752-00 | | | SKT,PL-IN ELEK:MICROCIRCUIT,20 DIP<br>*END MOUNTING PARTS* | 09922 | DILB20P-108 |
| A9U332 | 156-3011-00 | | | IC,MEMORY:CMOS,DRAM;256K X 4, 120NS;514256, DIP20.3,<br>*MOUNTING PARTS* | 80009 | 156-3011-00 |
| | 136-0752-00 | | | SKT,PL-IN ELEK:MICROCIRCUIT,20 DIP<br>*END MOUNTING PARTS* | 09922 | DILB20P-108 |
| A9U338 | 156-2978-00 | | | MICROCKT,DGTL:NMOS,65536 X 4 DUAL PORT DRAM<br>*MOUNTING PARTS* | 4T165 | UPD41264-12 |
| A9U338 | 136-0977-00 | | | SOCKET,DIP::<br>*END MOUNTING PARTS* | 63058 | DIP 424-003B-F |
| A9U348 | 156-2978-00 | | | MICROCKT,DGTL:NMOS,65536 X 4 DUAL PORT DRAM<br>*MOUNTING PARTS* | 4T165 | UPD41264-12 |
| | 136-0977-00 | | | SOCKET,DIP::<br>*END MOUNTING PARTS* | 63058 | DIP 424-003B-F |
| A9U350 | 156-3011-00 | | | IC,MEMORY:CMOS,DRAM;256K X 4, 120NS;514256, DIP20.3,<br>*MOUNTING PARTS* | 80009 | 156-3011-00 |
| | 136-0752-00 | | | SKT,PL-IN ELEK:MICROCIRCUIT,20 DIP<br>*END MOUNTING PARTS* | 09922 | DILB20P-108 |
| A9U352 | 156-3011-00 | | | IC,MEMORY:CMOS,DRAM;256K X 4, 120NS;514256, DIP20.3,<br>*MOUNTING PARTS* | 80009 | 156-3011-00 |
| | 136-0752-00 | | | SKT,PL-IN ELEK:MICROCIRCUIT,20 DIP<br>*END MOUNTING PARTS* | 09922 | DILB20P-108 |
| A9U356 | 156-2978-00 | | | MICROCKT,DGTL:NMOS,65536 X 4 DUAL PORT DRAM<br>*MOUNTING PARTS* | 4T165 | UPD41264-12 |
| | 136-0977-00 | | | SOCKET,DIP::<br>*END MOUNTING PARTS* | 63058 | DIP 424-003B-F |
| A9U358 | 156-2978-00 | | | MICROCKT,DGTL:NMOS,65536 X 4 DUAL PORT DRAM<br>*MOUNTING PARTS* | 4T165 | UPD41264-12 |
| | 136-0977-00 | | | SOCKET,DIP::<br>*END MOUNTING PARTS* | 63058 | DIP 424-003B-F |
| A9U360 | 156-3011-00 | | | IC,MEMORY:CMOS,DRAM;256K X 4, 120NS;514256, DIP20.3,<br>*MOUNTING PARTS* | 80009 | 156-3011-00 |
| | 136-0752-00 | | | SKT,PL-IN ELEK:MICROCIRCUIT,20 DIP<br>*END MOUNTING PARTS* | 09922 | DILB20P-108 |
| A9U362 | 156-3011-00 | | | IC,MEMORY:CMOS,DRAM;256K X 4, 120NS;514256, DIP20.3,<br>*MOUNTING PARTS* | 80009 | 156-3011-00 |
| | 136-0752-00 | | | SKT,PL-IN ELEK:MICROCIRCUIT,20 DIP<br>*END MOUNTING PARTS* | 09922 | DILB20P-108 |
| A9U368 | 156-2978-00 | | | MICROCKT,DGTL:NMOS,65536 X 4 DUAL PORT DRAM<br>*MOUNTING PARTS* | 4T165 | UPD41264-12 |
| | 136-0977-00 | | | SOCKET,DIP::<br>*END MOUNTING PARTS* | 63058 | DIP 424-003B-F |
| A9U376 | 156-1962-00 | | | IC,DIGITAL:FTTL,BUFFER;OCTAL NONINV BUFFER/ DRIVER, 3-STATE;74F244,DIP20.3,TUBE | 80009 | 156-1962-00 |

| Component No. | Tektronix Part No. | Serial/Assembly No. Effective | Dscont | Name & Description | Mfr. Code | Mfr. Part No. |
|---|---|---|---|---|---|---|
| A9U378 | 156-2260-00 | | | IC,DIGITAL:FTTL,MUX;DUAL 4-TO-1 DATA SELECTOR, 3-STATE;74F253,DIP16.3,TUBE | 80009 | 156-2260-00 |
| A9U382 | 156-1754-01 | | | IC,DIGITAL:ALSTTL,BUFFER/DRIVER;OCTAL NONINV, 3-STATE;74ALS244,DIP20.3,TUBE | 01295 | SN74ALS244AN3 |
| A9U392 | 156-2098-00 | | | IC,DIGITAL:ALSTTL,COUNTER;SYNCH 4-BIT BINARY;74ALS161,DIP16.3,TUBE | 01295 | SN74ALS161BN3 |
| A9U394 | 156-1611-00 | | | IC,DIGITAL:FTTL,FLIP FLOP;DUAL D-TYPE;74F74,DIP14.3,TUBE | 80009 | 156-1611-00 |
| A9U418 | 156-2978-00 | | | MICROCKT,DGTL:NMOS,65536 X 4 DUAL PORT DRAM<br>*MOUNTING PARTS* | 4T165 | UPD41264-12 |
| | 136-0977-00 | | | SOCKET,DIP::<br>*END MOUNTING PARTS* | 63058 | DIP 424-003B-F |
| A9U426 | 156-2978-00 | | | MICROCKT,DGTL:NMOS,65536 X 4 DUAL PORT DRAM<br>*MOUNTING PARTS* | 4T165 | UPD41264-12 |
| | 136-0977-00 | | | SOCKET,DIP::<br>*END MOUNTING PARTS* | 63058 | DIP 424-003B-F |
| A9U428 | 156-2978-00 | | | MICROCKT,DGTL:NMOS,65536 X 4 DUAL PORT DRAM<br>*MOUNTING PARTS* | 4T165 | UPD41264-12 |
| | 136-0977-00 | | | SOCKET,DIP::<br>*END MOUNTING PARTS* | 63058 | DIP 424-003B-F |
| A9U438 | 156-2978-00 | | | MICROCKT,DGTL:NMOS,65536 X 4 DUAL PORT DRAM<br>*MOUNTING PARTS* | 4T165 | UPD41264-12 |
| | 136-0977-00 | | | SOCKET,DIP::<br>*END MOUNTING PARTS* | 63058 | DIP 424-003B-F |
| A9U448 | 156-2978-00 | | | MICROCKT,DGTL:NMOS,65536 X 4 DUAL PORT DRAM<br>*MOUNTING PARTS* | 4T165 | UPD41264-12 |
| | 136-0977-00 | | | SOCKET,DIP::<br>*END MOUNTING PARTS* | 63058 | DIP 424-003B-F |
| A9U456 | 156-2978-00 | | | MICROCKT,DGTL:NMOS,65536 X 4 DUAL PORT DRAM<br>*MOUNTING PARTS* | 4T165 | UPD41264-12 |
| | 136-0977-00 | | | SOCKET,DIP::<br>*END MOUNTING PARTS* | 63058 | DIP 424-003B-F |
| A9U458 | 156-2978-00 | | | MICROCKT,DGTL:NMOS,65536 X 4 DUAL PORT DRAM<br>*MOUNTING PARTS* | 4T165 | UPD41264-12 |
| | 136-0977-00 | | | SOCKET,DIP::<br>*END MOUNTING PARTS* | 63058 | DIP 424-003B-F |
| A9U468 | 156-2978-00 | | | MICROCKT,DGTL:NMOS,65536 X 4 DUAL PORT DRAM<br>*MOUNTING PARTS* | 4T165 | UPD41264-12 |
| | 136-0977-00 | | | SOCKET,DIP::<br>*END MOUNTING PARTS* | 63058 | DIP 424-003B-F |
| A9U474 | 156-2260-00 | | | IC,DIGITAL:FTTL,MUX;DUAL 4-TO-1 DATA SELECTOR, 3-STATE;74F253,DIP16.3,TUBE | 80009 | 156-2260-00 |
| A9U476 | 156-2260-00 | | | IC,DIGITAL:FTTL,MUX;DUAL 4-TO-1 DATA SELECTOR, 3-STATE;74F253,DIP16.3,TUBE | 80009 | 156-2260-00 |
| A9U478 | 156-2260-00 | | | IC,DIGITAL:FTTL,MUX;DUAL 4-TO-1 DATA SELECTOR, 3-STATE;74F253,DIP16.3,TUBE | 80009 | 156-2260-00 |
| A9U494 | 156-3591-00 | | | IC,DIGITAL:FTTL,MISC;DRAM CONTROLLER, W/ DUAL-PORT ARBITER;74F764-1,DIP40.6<br>*MOUNTING PARTS* | 80009 | 156-3591-00 |
| | 136-0757-00 | | | SOCKET,DIP:<br>*END MOUNTING PARTS* | 09922 | DILB40P-108 |
| A9U524 | 160-6630-00 | | | MICROCKT,DGTL:TTL,PRGM LOGIC ARRAY,PRGM<br>*MOUNTING PARTS* | 80009 | 160-6630-00 |
| | 136-0925-00 | | | SOCKET,DIP::<br>*END MOUNTING PARTS* | 91506 | 224-AG30D |
| A9U528 | 160-6098-00 | | | MICROCKT,DGTL:OCTAL 20 INP,LOGIC ARRAY,PRGM | 80009 | 160-6098-00 |
| A9U532 | 156-2786-01 | | | IC,DIGITAL:FCTCMOS,BUFFER;OCTAL, 3-STATE;74FCT244A,DIP20.3 | 80009 | 156-2786-01 |
| A9U536 | 156-2482-00 | | | IC,DIGITAL:ASTTL,BUFFER/DRIVER;INV OCTAL, DRIVER, 3-STATE;74AS240,DIP20.3,TUBE | 96214 | SN74AS240(N/J) |
| A9U544 | 160-6254-00 | | | MICROCKT,DGTL:OCTAL 20 INP,LOGIC ARRAY,PRGM<br>*MOUNTING PARTS* | 80009 | 160-6254-00 |

| Component No. | Tektronix Part No. | Serial/Assembly No. Effective | Dscont | Name & Description | Mfr. Code | Mfr. Part No. |
|---|---|---|---|---|---|---|
| | 136-0925-00 | | | SOCKET,DIP:: *END MOUNTING PARTS* | 91506 | 224-AG30D |
| A9U548 | 156-1756-00 | | | IC,DIGITAL:ALSTTL,FLIP FLOP;DUAL D-TYPE W/C LEAR;74ALS74,DIP14.3 | 01295 | SN74ALS74NP3/JP4 |
| A9U552 | 156-1974-00 | | | IC,DIGITAL:FTTL,FLIP FLOP;DUAL J-K, NEGATIV E EDGE TRIG, PRESET, CLEAR;74F112,DIP16.3,T UBE | 04713 | MC74F112N |
| A9U555 | 160-5097-00 | | | IC,DIGITAL:STTL,PLD;PAL,22V10,35NS,18MHZ,18 0MA,PRGM 156-2250-00;22V10,DIP24.3 *MOUNTING PARTS* | 80009 | 160-5097-00 |
| | 136-0925-00 | | | SOCKET,DIP:: *END MOUNTING PARTS* | 91506 | 224-AG30D |
| A9U558 | 156-1754-01 | | | IC,DIGITAL:ALSTTL,BUFFER/DRIVER;OCTAL NONIN V, 3-STATE;74ALS244,DIP20.3,TUBE | 01295 | SN74ALS244AN3 |
| A9U564 | 156-2786-01 | | | IC,DIGITAL:FCTCMOS,BUFFER;OCTAL, 3-STATE;74 FCT244A,DIP20.3 | 80009 | 156-2786-01 |
| A9U574 | 156-2339-00 | | | IC,DIGITAL:ASTTL,GATE;QUAD 2-INPUT OR;74AS3 2,DIP14.3,TUBE | 80009 | 156-2339-00 |
| A9U576 | 156-2292-00 | | | IC,DIGITAL:ALSTTL,TRANSCEIVER;OCTAL NONINV, 3-STATE;74ALS652,DIP24.3,TUBE | 80009 | 156-2292-00 |
| A9U578 | 156-2292-00 | | | IC,DIGITAL:ALSTTL,TRANSCEIVER;OCTAL NONINV, 3-STATE;74ALS652,DIP24.3,TUBE | 80009 | 156-2292-00 |
| A9U584 | 156-1756-00 | | | IC,DIGITAL:ALSTTL,FLIP FLOP;DUAL D-TYPE W/C LEAR;74ALS74,DIP14.3 | 01295 | SN74ALS74NP3/JP4 |
| A9U586 | 156-2334-00 | | | IC,DIGITAL:ALSTTL,COUNTER;SYNCH 4-BIT UP/DO WN BINARY;74ALS191,DIP16.3,TUBE | 01295 | SN74ALS191N3 |
| A9U588 | 156-2334-00 | | | IC,DIGITAL:ALSTTL,COUNTER;SYNCH 4-BIT UP/DO WN BINARY;74ALS191,DIP16.3,TUBE | 01295 | SN74ALS191N3 |
| A9U592 | 156-2338-00 | | | IC,DIGITAL:ASTTL,FLIP FLOP;DUAL D-TYPE;74AS 74,DIP14.3,TUBE | 80009 | 156-2338-00 |
| A9U624 | 156-2389-00 | | | IC,DIGITAL:ASTTL,COUNTER;SYNCH 8-BIT UP/DOW N, ASYNCH CLEAR;74AS867,DIP24.3 | 01295 | SN74AS867NT3/JT4 |
| A9U626 | 156-2389-00 | | | IC,DIGITAL:ASTTL,COUNTER;SYNCH 8-BIT UP/DOW N, ASYNCH CLEAR;74AS867,DIP24.3 | 01295 | SN74AS867NT3/JT4 |
| A9U644 | 156-2389-00 | | | IC,DIGITAL:ASTTL,COUNTER;SYNCH 8-BIT UP/DOW N, ASYNCH CLEAR;74AS867,DIP24.3 | 01295 | SN74AS867NT3/JT4 |
| A9U646 | 156-2323-00 | | | IC,DIGITAL:ASTTL,GATE;HEX INVERTER;74AS04,D IP14.3,TUBE | 01295 | SN74AS04N |
| A9U648 | 156-2601-00 | | | IC,DIGITAL:HCMOS,COUNTER;12-STAGE BINARY RI PPLE;74HC4040,DIP16.3,TUBE | 80009 | 156-2601-00 |
| A9U656 | 156-1919-00 | | | IC,DIGITAL:FTTL,FLIP FLOP;DUAL J-K, PRESET, CLEAR;74F109,DIP16.3,TUBE | 04713 | MC74F109 ND/JD |
| A9U666 | 156-1756-00 | | | IC,DIGITAL:ALSTTL,FLIP FLOP;DUAL D-TYPE W/C LEAR;74ALS74,DIP14.3 | 01295 | SN74ALS74NP3/JP4 |
| A9U668 | 156-2543-00 | | | IC,DIGITAL: | 80009 | 156-2543-00 |
| A9U674 | 160-5091-00 | | | MICROCKT,DGTL:10 LOW OUT ARRAY LOGIC,PRGM *MOUNTING PARTS* | 80009 | 160-5091-00 |
| | 136-0925-00 | | | SOCKET,DIP:: *END MOUNTING PARTS* | 91506 | 224-AG30D |
| A9U684 | 156-2334-00 | | | IC,DIGITAL:ALSTTL,COUNTER;SYNCH 4-BIT UP/DO WN BINARY;74ALS191,DIP16.3,TUBE | 01295 | SN74ALS191N3 |
| A9U686 | 156-1756-00 | | | IC,DIGITAL:ALSTTL,FLIP FLOP;DUAL D-TYPE W/C LEAR;74ALS74,DIP14.3 | 01295 | SN74ALS74NP3/JP4 |
| A9U688 | 156-1754-01 | | | IC,DIGITAL:ALSTTL,BUFFER/DRIVER;OCTAL NONIN V, 3-STATE;74ALS244,DIP20.3,TUBE | 01295 | SN74ALS244AN3 |
| A9U732 | 156-0733-02 | | | IC,DIGITAL:LSTTL,MULTIVIBRATOR;DUPLICATE OF 156-0733-00;74LS221,DIP16.3,TUBE | 80009 | 156-0733-02 |
| A9U734 | 160-6095-00 | | | MICROCKT,DGTL:HEX 16 INP RGTR,LOGIC ARRAY,P RGM *MOUNTING PARTS* | 80009 | 160-6095-00 |

| Component No. | Tektronix Part No. | Serial/Assembly No. Effective | Dscont | Name & Description | Mfr. Code | Mfr. Part No. |
|---|---|---|---|---|---|---|
| | 136-0752-00 | | | SKT,PL-IN ELEK:MICROCIRCUIT,20 DIP<br>*END MOUNTING PARTS* | 09922 | DILB20P-108 |
| A9U742 | 156-0733-02 | | | IC,DIGITAL:LSTTL,MULTIVIBRATOR;DUPLICATE OF 156-0733-00;74LS221,DIP16.3,TUBE | 80009 | 156-0733-02 |
| A9U754 | 156-1200-01 | | | IC,LINEAR: | 80009 | 156-1200-01 |
| A9U762 | 156-2543-00 | | | IC,DIGITAL: | 80009 | 156-2543-00 |
| A9U764 | 156-2493-00 | | | IC,CONVERTER: | 80009 | 156-2493-00 |
| A9U766 | 156-1126-00 | | | IC,LINEAR:BIPOLAR,COMPARATOR;OPEN COLLECTOR,200NS;LM311N,DIP08.3 | 80009 | 156-1126-00 |
| A9U782 | 156-1754-01 | | | IC,DIGITAL:ALSTTL,BUFFER/DRIVER;OCTAL NONINV, 3-STATE;74ALS244,DIP20.3,TUBE | 01295 | SN74ALS244AN3 |
| A9U784 | 156-1998-00 | | | IC,DIGITAL:ALSTTL,FLIP FLOP;OCTAL D-TYPE, W/CLEAR;74ALS273,DIP20.3 | 01295 | SN74ALS273 |
| A9U786 | 160-6096-00 | | | MICROCKT,DGTL:LOW POWER,LOGIC ARRAY,PRGM<br>*MOUNTING PARTS* | 80009 | 160-6096-00 |
| | 136-0752-00 | | | SKT,PL-IN ELEK:MICROCIRCUIT,20 DIP<br>*END MOUNTING PARTS* | 09922 | DILB20P-108 |
| A9U788 | 156-1160-00 | | | IC,LINEAR:BIPOLAR,VOLTAGE REGULATOR;POSITIVE,12V,100MA,4%;LM78L12ACH,TO-39 | 80009 | 156-1160-00 |
| A9U834 | 156-1754-01 | | | IC,DIGITAL:ALSTTL,BUFFER/DRIVER;OCTAL NONINV, 3-STATE;74ALS244,DIP20.3,TUBE | 01295 | SN74ALS244AN3 |
| A9U836 | 156-2098-00 | | | IC,DIGITAL:ALSTTL,COUNTER;SYNCH 4-BIT BINARY;74ALS161,DIP16.3,TUBE | 01295 | SN74ALS161BN3 |
| A9U838 | 156-3106-00 | | | IC,DIGITAL:HCMOS,COUNTER;14-STAGE BINARY RIPPLE;74HC4020,DIP16.3,TUBE | 02735 | CD74HC4020E |
| A9U848 | 156-1756-00 | | | IC,DIGITAL:ALSTTL,FLIP FLOP;DUAL D-TYPE W/CLEAR;74ALS74,DIP14.3 | 01295 | SN74ALS74NP3/JP4 |
| A9U854 | 156-1748-02 | | | IC,DIGITAL:ALSTTL,TRANSCEIVER;OCTAL NONINV, 3-STATE;74ALS245,DIP20.3,TUBE<br>*MOUNTING PARTS* | 01295 | SN74ALS245AN3 |
| | 136-0752-00 | | | SKT,PL-IN ELEK:MICROCIRCUIT,20 DIP<br>*END MOUNTING PARTS* | 09922 | DILB20P-108 |
| A9U856 | 156-1756-00 | | | IC,DIGITAL:ALSTTL,FLIP FLOP;DUAL D-TYPE W/CLEAR;74ALS74,DIP14.3 | 01295 | SN74ALS74NP3/JP4 |
| A9U862 | 156-1748-02 | | | IC,DIGITAL:ALSTTL,TRANSCEIVER;OCTAL NONINV, 3-STATE;74ALS245,DIP20.3,TUBE<br>*MOUNTING PARTS* | 01295 | SN74ALS245AN3 |
| | 136-0752-00 | | | SKT,PL-IN ELEK:MICROCIRCUIT,20 DIP<br>*END MOUNTING PARTS* | 09922 | DILB20P-108 |
| A9U864 | 156-2456-00 | | | IC,DIGITAL:LSTTL,COUNTER;8-BIT BINARY, WITH INPUT REGISTERS;74LS592,DIP16.3,TUBE | 01295 | SN74LS592J4 |
| A9U866 | 156-2427-00 | | | IC,DIGITAL:ALSTTL,GATE;HEX INV, OC;74ALS05,DIP14.3,TUBE | 01295 | SN74ALS05AN/J |
| A9U868 | 160-5092-00 | | | MICROCKT,DGTL:10 LOW OUT ARRAY LOGIC,PRGM<br>*MOUNTING PARTS* | 80009 | 160-5092-00 |
| | 136-0925-00 | | | SOCKET,DIP::<br>*END MOUNTING PARTS* | 91506 | 224-AG30D |
| A9U912 | 156-1160-00 | | | IC,LINEAR:BIPOLAR,VOLTAGE REGULATOR;POSITIVE,12V,100MA,4%;LM78L12ACH,TO-39 | 80009 | 156-1160-00 |
| A9U922 | 156-1207-00 | | | IC,LINEAR:BIPOLAR,VOLTAGE REGULATOR;NEGATIVE,-12V,500MA,3%;LM320H-12,TO-39 | 80009 | 156-1207-00 |
| A9U946 | 160-6097-00 | | | MICROCKT,DGTL:QUAD,LOGIC ARRAY,PRGM<br>*MOUNTING PARTS* | 80009 | 160-6097-00 |
| | 136-0752-00 | | | SKT,PL-IN ELEK:MICROCIRCUIT,20 DIP<br>*END MOUNTING PARTS* | 09922 | DILB20P-108 |
| A9U952 | 156-1915-00 | | | IC,PROCESSOR:NMOS,MICROPROCESSOR;16-BIT WITH 8-BIT DATA BUS,8MHZ;68008,DIP48.6<br>*MOUNTING PARTS* | 80009 | 156-1915-00 |
| | 136-0751-00 | | | SOCKET DIP::<br>*END MOUNTING PARTS* | 09922 | DILB24P108 |

| Component No. | Tektronix Part No. | Serial/Assembly No. Effective | Dscont | Name & Description | Mfr. Code | Mfr. Part No. |
|---|---|---|---|---|---|---|
| A9U956 | 156-2096-00 | | | IC,DIGITAL:ALSTTL,FLIP FLOP;QUAD D-TYPE, W/ CLEAR;74ALS175,DIP16.3,TUBE | 01295 | SN74ALS175N |
| A9U982 | 156-1842-00 | | | IC,MEMORY:CMOS,SRAM;8K X 8,150NS,OE;,DIP28.6 | 80009 | 156-1842-00 |
| | | | | *MOUNTING PARTS* | | |
| | 136-0755-00 | | | SOCKET,DIP: | 09922 | DILB28P-108 |
| | | | | *END MOUNTING PARTS* | | |
| A9U986 | 160-5099-05 | | | MICROCKT,DGTL:CMOS,65536 X 8 EPROM,W/3 STATE OUT,PRGM,27C512,DIP28 | 80009 | 160-5099-05 |
| | | | | *MOUNTING PARTS* | | |
| | 136-0755-00 | | | SOCKET,DIP: | 09922 | DILB28P-108 |
| | | | | *END MOUNTING PARTS* | | |
| A9Y396 | 119-1413-00 | | | OSC,XTAL CLOCK:20.0MHZ, +/-0.05 %, TTL, 4 PIN 14 PIN DIP COMPATIBLE | 14301 | AE 404-417 |
| A9Y638 | 119-1953-00 | | | OSC,XTAL CLOCK:TTL,;25 MHZ,0.01%,0-70 DEG C,14 PIN DIP COMPATABLE,0.110 L 0.020 DIA LEADS | 80009 | 119-1953-00 |
| A9Y932 | 119-1897-00 | | | OSCILLATOR,RF:XTAL CONTROLLED,8.00MHZ,0.01% | 01537 | RASCO-1-8.00 MHZ |

| Component No. | Tektronix Part No. | Serial/Assembly No. Effective | Dscont | Name & Description | Mfr. Code | Mfr. Part No. |
|---|---|---|---|---|---|---|
| A10 | 672-1299-03 | B022000 | B022805 | CIRCUIT BD ASSY:FRONT PANEL | 80009 | 672-1299-03 |
| A10 | 672-1299-04 | B022806 | B030246 | CIRCUIT BD ASSY:FRONT PANEL | 80009 | 672-1299-04 |
| A10 | 672-1299-05 | B030247 | B030499 | CIRCUIT BD ASSY:FRONT PANEL | 80009 | 672-1299-05 |
| A10 | 672-1299-06 | B030500 | | CIRCUIT BD ASSY:FRONT PANEL | 80009 | 672-1299-06 |

| Component No. | Tektronix Part No. | Serial/Assembly No. Effective | Dscont | Name & Description | Mfr. Code | Mfr. Part No. |
|---|---|---|---|---|---|---|
| A10A1 | ----- ----- | | | CIRCUIT BD ASSY:FRONT PANEL (FOR REPLACEMENT SEE A10) | | |
| A10A1C172 | 281-0775-01 | | | CAP,FXD,CER DI:0.1UF,20%,50V | 04222 | SA105E104MAA |
| A10A1C182 | 281-0775-01 | | | CAP,FXD,CER DI:0.1UF,20%,50V | 04222 | SA105E104MAA |
| A10A1C242 | 281-0775-01 | | | CAP,FXD,CER DI:0.1UF,20%,50V | 04222 | SA105E104MAA |
| A10A1C316 | 281-0775-01 | 672-1299-00 | 672-1299-04 | CAP,FXD,CER DI:0.1UF,20%,50V | 04222 | SA105E104MAA |
| A10A1C328 | 283-0167-00 | 672-1299-00 | 672-1299-04 | CAP,FXD,CER DI:0.1UF,10%,100V | 80009 | 283-0167-00 |
| A10A1C328 | 131-0566-00 | 672-1299-05 | | BUS,CONDUCTOR:DUMMY RES,0.094 OD X 0.225 L | 80009 | 131-0566-00 |
| A10A1C332 | 283-0692-00 | 672-1299-00 | 672-1299-04 | CAP,FXD,MICA DI:670PF,1%,300V | 80009 | 283-0692-00 |
| A10A1C340 | 283-0785-00 | 672-1299-03 | 672-1299-05 | CAP,FXD,MICA DI:250PF,1%,500V | 80009 | 283-0785-00 |
| A10A1C340 | 283-0645-00 | 672-1299-06 | | CAP,FXD,MICA DI:790PF,1%,300V | 80009 | 283-0645-00 |
| A10A1C342 | 281-0775-01 | | | CAP,FXD,CER DI:0.1UF,20%,50V | 04222 | SA105E104MAA |
| A10A1C345 | 283-0260-00 | | | CAP,FXD,CER DI:5.6PF,+/-0.25PF,200V | 04222 | SR152A5R6CAA |
| A10A1C355 | 281-0775-01 | | | CAP,FXD,CER DI:0.1UF,20%,50V | 04222 | SA105E104MAA |
| A10A1C372 | 281-0775-01 | | | CAP,FXD,CER DI:0.1UF,20%,50V | 04222 | SA105E104MAA |
| A10A1C386 | 281-0775-01 | | | CAP,FXD,CER DI:0.1UF,20%,50V | 04222 | SA105E104MAA |
| A10A1C413 | 281-0775-01 | | | CAP,FXD,CER DI:0.1UF,20%,50V | 04222 | SA105E104MAA |
| A10A1C426 | 281-0775-01 | | | CAP,FXD,CER DI:0.1UF,20%,50V | 04222 | SA105E104MAA |
| A10A1C428 | 281-0775-01 | | | CAP,FXD,CER DI:0.1UF,20%,50V | 04222 | SA105E104MAA |
| A10A1C446 | 281-0775-01 | | | CAP,FXD,CER DI:0.1UF,20%,50V | 04222 | SA105E104MAA |
| A10A1C453 | 281-0775-01 | | | CAP,FXD,CER DI:0.1UF,20%,50V | 04222 | SA105E104MAA |
| A10A1C458 | 281-0775-01 | | | CAP,FXD,CER DI:0.1UF,20%,50V | 04222 | SA105E104MAA |
| A10A1C472 | 281-0775-01 | | | CAP,FXD,CER DI:0.1UF,20%,50V | 04222 | SA105E104MAA |
| A10A1C476 | 283-0169-00 | | | CAP,FXD,CER DI:0.022UF,10%,200V | 80009 | 283-0169-00 |
| A10A1C486 | 281-0775-01 | | | CAP,FXD,CER DI:0.1UF,20%,50V | 04222 | SA105E104MAA |
| A10A1C513 | 281-0775-01 | | | CAP,FXD,CER DI:0.1UF,20%,50V | 04222 | SA105E104MAA |
| A10A1C526 | 281-0775-01 | | | CAP,FXD,CER DI:0.1UF,20%,50V | 04222 | SA105E104MAA |
| A10A1C528 | 281-0775-01 | | | CAP,FXD,CER DI:0.1UF,20%,50V | 04222 | SA105E104MAA |
| A10A1C541 | 281-0775-01 | | | CAP,FXD,CER DI:0.1UF,20%,50V | 04222 | SA105E104MAA |
| A10A1C553 | 283-0177-00 | | | CAP,FXD,CER DI:1UF,+80-20%,25V | 04222 | SR303E105ZAA |
| A10A1C554 | 283-0177-00 | | | CAP,FXD,CER DI:1UF,+80-20%,25V | 04222 | SR303E105ZAA |
| A10A1C573 | 281-0775-01 | | | CAP,FXD,CER DI:0.1UF,20%,50V | 04222 | SA105E104MAA |
| A10A1C586 | 281-0775-01 | | | CAP,FXD,CER DI:0.1UF,20%,50V | 04222 | SA105E104MAA |
| A10A1C613 | 281-0775-01 | | | CAP,FXD,CER DI:0.1UF,20%,50V | 04222 | SA105E104MAA |
| A10A1C626 | 281-0775-01 | | | CAP,FXD,CER DI:0.1UF,20%,50V | 04222 | SA105E104MAA |
| A10A1C628 | 281-0775-01 | | | CAP,FXD,CER DI:0.1UF,20%,50V | 04222 | SA105E104MAA |
| A10A1C641 | 281-0775-01 | | | CAP,FXD,CER DI:0.1UF,20%,50V | 04222 | SA105E104MAA |
| A10A1C659 | 281-0809-00 | | | CAP,FXD,CER DI:200 PF,5%,100V | 04222 | SA101A201JAA |
| A10A1C669 | 281-0775-01 | | | CAP,FXD,CER DI:0.1UF,20%,50V | 04222 | SA105E104MAA |
| A10A1C713 | 281-0775-01 | | | CAP,FXD,CER DI:0.1UF,20%,50V | 04222 | SA105E104MAA |
| A10A1C726 | 281-0775-01 | | | CAP,FXD,CER DI:0.1UF,20%,50V | 04222 | SA105E104MAA |
| A10A1C728 | 281-0775-01 | | | CAP,FXD,CER DI:0.1UF,20%,50V | 04222 | SA105E104MAA |
| A10A1C741 | 281-0775-01 | | | CAP,FXD,CER DI:0.1UF,20%,50V | 04222 | SA105E104MAA |
| A10A1C744 | 283-0177-00 | | | CAP,FXD,CER DI:1UF,+80-20%,25V | 04222 | SR303E105ZAA |
| A10A1C748 | 281-0775-01 | | | CAP,FXD,CER DI:0.1UF,20%,50V | 04222 | SA105E104MAA |
| A10A1C760 | 281-0775-01 | | | CAP,FXD,CER DI:0.1UF,20%,50V | 04222 | SA105E104MAA |
| A10A1C763 | 281-0809-00 | | | CAP,FXD,CER DI:200 PF,5%,100V | 04222 | SA101A201JAA |
| A10A1C766 | 283-0169-00 | | | CAP,FXD,CER DI:0.022UF,10%,200V | 80009 | 283-0169-00 |
| A10A1C773 | 281-0775-01 | | | CAP,FXD,CER DI:0.1UF,20%,50V | 04222 | SA105E104MAA |
| A10A1C780 | 285-1340-00 | | | CAP,FXD,MTLZD:0.01UF,10%,63V | 55112 | 185/0.01/K/63AAA |
| A10A1C782 | 281-0775-01 | | | CAP,FXD,CER DI:0.1UF,20%,50V | 04222 | SA105E104MAA |
| A10A1C819 | 281-0775-01 | | | CAP,FXD,CER DI:0.1UF,20%,50V | 04222 | SA105E104MAA |
| A10A1C821 | 281-0775-01 | | | CAP,FXD,CER DI:0.1UF,20%,50V | 04222 | SA105E104MAA |
| A10A1C860 | 281-0775-01 | | | CAP,FXD,CER DI:0.1UF,20%,50V | 04222 | SA105E104MAA |
| A10A1C865 | 281-0775-01 | | | CAP,FXD,CER DI:0.1UF,20%,50V | 04222 | SA105E104MAA |
| A10A1C879 | 281-0775-01 | | | CAP,FXD,CER DI:0.1UF,20%,50V | 04222 | SA105E104MAA |
| A10A1C885 | 290-0966-00 | | | CAP,FXD,ELCTLT:220UF,+50-20%,25V | 55680 | TLBIE221MAA |
| A10A1C888 | 290-1107-00 | | | CAP,FXD,ELCTLT:10UF,20%,50V | 80009 | 290-1107-00 |
| A10A1C890 | 281-0775-01 | | | CAP,FXD,CER DI:0.1UF,20%,50V | 04222 | SA105E104MAA |

| Component No. | Tektronix Part No. | Serial/Assembly No. Effective | Dscont | Name & Description | Mfr. Code | Mfr. Part No. |
|---|---|---|---|---|---|---|
| A10A1C895 | 283-0479-00 | | | CAP,FXD,CER DI:0.47UF,+80-20%,25V | 80009 | 283-0479-00 |
| A10A1C899 | 283-0479-00 | | | CAP,FXD,CER DI:0.47UF,+80-20%,25V | 80009 | 283-0479-00 |
| A10A1C952 | 281-0775-01 | | | CAP,FXD,CER DI:0.1UF,20%,50V | 04222 | SA105E104MAA |
| A10A1C958 | 281-0775-01 | | | CAP,FXD,CER DI:0.1UF,20%,50V | 04222 | SA105E104MAA |
| A10A1C968 | 283-0555-00 | | | CAP,FXD,MICA DI:2000PF,1%,500V | 80009 | 283-0555-00 |
| A10A1C977 | 281-0775-01 | | | CAP,FXD,CER DI:0.1UF,20%,50V | 04222 | SA105E104MAA |
| A10A1CR126 | 152-0333-00 | | | DIODE,SIG:,ULTRA FAST;80V,4NS,1VF AT 200MA, 2.0PF;DO-35,T&R | 07263 | FDH-6012 |
| A10A1CR339 | 152-0581-00 | 672-1299-00 | 672-1299-04 | DIODE,RECT:SCHTKY,;20V,1A,.450VF,25A IFSM;1 N5817 | 80009 | 152-0581-00 |
| A10A1CR339 | 322-3284-00 | 672-1299-05 | | RES,FXD,FILM:8.87K OHM,1%,0.2W,TC=T0 | 57668 | CRB20 FXE 8K87 |
| A10A1CR439 | 152-0333-00 | | | DIODE,SIG:,ULTRA FAST;80V,4NS,1VF AT 200MA, 2.0PF;DO-35,T&R | 07263 | FDH-6012 |
| A10A1CR441 | 152-0333-00 | | | DIODE,SIG:,ULTRA FAST;80V,4NS,1VF AT 200MA, 2.0PF;DO-35,T&R | 07263 | FDH-6012 |
| A10A1CR570 | 152-0333-00 | | | DIODE,SIG:,ULTRA FAST;80V,4NS,1VF AT 200MA, 2.0PF;DO-35,T&R | 07263 | FDH-6012 |
| A10A1CR571 | 152-0333-00 | | | DIODE,SIG:,ULTRA FAST;80V,4NS,1VF AT 200MA, 2.0PF;DO-35,T&R | 07263 | FDH-6012 |
| A10A1CR822 | 152-0964-00 | | | DIODE,SIG: | 80009 | 152-0964-00 |
| A10A1CR842 | 152-0964-00 | | | DIODE,SIG: | 80009 | 152-0964-00 |
| A10A1CR922 | 152-0964-00 | | | DIODE,SIG: | 80009 | 152-0964-00 |
| A10A1CR942 | 152-0964-00 | | | DIODE,SIG: | 80009 | 152-0964-00 |
| A10A1DS411 | 150-1077-00 | | | LT EMITTING DIO:RED,650NM,40MA MAX | 05464 | LL201R |
| A10A1F890 | 159-0208-00 | | | FUSE,WIRE LEAD:2A,125V,5 SEC | 75915 | 255002 |
| A10A1J159 | 174-0923-00 | | | CA ASSY,SP,ELEC:25 CONTACT,2.0 L | 00779 | 487152-1 |
| A10A1J933 | 131-2401-00 | | | CONN,HDR::PCB,;MALE,STR,2 X 25,0.1 CTR,0.23 0 MLG X 0.100 TAIL,30 GOLD;,, | 58050 | 082-2544-SD10 |
| A10A1LS111 | 119-2520-00 | | | TRANSDUCER:AUDIO,2.2KHZ,W/DRIVE CKT | 80009 | 119-2520-00 |
| A10A1P695 | 174-0838-00 | | | CA ASSY,SP,ELEC:34,30 AWG,9.2 L,RIBBON | 80009 | 174-0838-00 |
| A10A1Q228 | 151-0190-00 | | | TRANSISTOR,SIG:BIPOLAR,NPN;40V,200MA,300MHZ ,AMPLIFIER;2N3904,TO-92 EBC | 80009 | 151-0190-00 |
| A10A1Q646 | 151-0103-00 | | | TRANSISTOR,SIG:BIPOLAR,NPN;40V,800MA,300MHZ ,AMPLIFIER;2N2219A,TO-39 | 80009 | 151-0103-00 |
| A10A1Q654 | 151-0134-00 | | | TRANSISTOR,SIG:BIPOLAR,PNP;60V,600MA,200MHZ ,AMPLIFIER;2N2905A,TO-39 | 80009 | 151-0134-00 |
| A10A1R123 | 311-0978-00 | 672-1299-00 | 672-1299-04 | RES,VAR,NONWW:TRMR,250 OHM,0.5W | 80009 | 311-0978-00 |
| A10A1R127 | 315-0103-00 | 672-1299-00 | 672-1299-04 | RES,FXD,FILM:10K OHM,5%,0.25W | 80009 | 315-0103-00 |
| A10A1R127 | 322-3289-00 | 672-1299-05 | | RES,FXD:METAL FILM;10K OHM,1%,0.2W,TC=100 P PM;AXIAL,T&R,SMALL BODY | 80009 | 322-3289-00 |
| A10A1R223 | 322-3179-00 | 672-1299-00 | 672-1299-04 | RES,FXD,FILM:715 OHM,1%,0.2W,TC=T0 | 80009 | 322-3179-00 |
| A10A1R265 | 315-0563-00 | 672-1299-03 | 672-1299-03 | RES,FXD,FILM:56K OHM,5%,0.25W | 80009 | 315-0563-00 |
| A10A1R265 | 315-0823-00 | 672-1299-04 | | RES,FXD,FILM:82K OHM,5%,0.25W | 80009 | 315-0823-00 |
| A10A1R267 | 315-0563-00 | 672-1299-03 | 672-1299-03 | RES,FXD,FILM:56K OHM,5%,0.25W | 80009 | 315-0563-00 |
| A10A1R267 | 315-0823-00 | 672-1299-04 | | RES,FXD,FILM:82K OHM,5%,0.25W | 80009 | 315-0823-00 |
| A10A1R315 | 321-0274-00 | 672-1299-00 | 672-1299-04 | RES,FXD,FILM:6.98K OHM,1%,0.125W,TC=T0 | 80009 | 321-0274-00 |
| A10A1R329 | 322-3193-07 | 672-1299-00 | 672-1299-04 | RES,FXD,FILM:1K OHM,0.1%,0.2W,TC=T9 | 80009 | 322-3193-07 |
| A10A1R330 | 322-3193-07 | 672-1299-00 | 672-1299-04 | RES,FXD,FILM:1K OHM,0.1%,0.2W,TC=T9 | 80009 | 322-3193-07 |
| A10A1R336 | 315-0242-00 | 672-1299-00 | 672-1299-04 | RES,FXD,FILM:2.4K OHM,5%,0.25W | 80009 | 315-0242-00 |
| A10A1R336 | 322-3289-00 | 672-1299-05 | | RES,FXD:METAL FILM;10K OHM,1%,0.2W,TC=100 P PM;AXIAL,T&R,SMALL BODY | 80009 | 322-3289-00 |
| A10A1R338 | 315-0202-00 | 672-1299-00 | 672-1299-04 | RES,FXD,FILM:2K OHM,5%,0.25W | 80009 | 315-0202-00 |
| A10A1R338 | 322-3284-00 | 672-1299-05 | | RES,FXD,FILM:8.87K OHM,1%,0.2W,TC=T0 | 57668 | CRB20 FXE 8K87 |
| A10A1R343 | 315-0682-00 | | | RES,FXD,FILM:6.8K OHM,5%,0.25W | 80009 | 315-0682-00 |
| A10A1R345 | 315-0391-00 | | | RES,FXD,FILM:390 OHM,5%,0.25W | 80009 | 315-0391-00 |
| A10A1R443 | 315-0103-00 | | | RES,FXD,FILM:10K OHM,5%,0.25W | 80009 | 315-0103-00 |
| A10A1R444 | 315-0103-00 | | | RES,FXD,FILM:10K OHM,5%,0.25W | 80009 | 315-0103-00 |
| A10A1R511 | 315-0331-00 | | | RES,FXD,FILM:330 OHM,5%,0.25W | 80009 | 315-0331-00 |
| A10A1R546 | 315-0391-00 | | | RES,FXD,FILM:390 OHM,5%,0.25W | 80009 | 315-0391-00 |

| Component No. | Tektronix Part No. | Serial/Assembly No. Effective | Dscont | Name & Description | Mfr. Code | Mfr. Part No. |
|---|---|---|---|---|---|---|
| A10A1R547 | 315-0682-00 | | | RES,FXD,FILM:6.8K OHM,5%,0.25W | 80009 | 315-0682-00 |
| A10A1R548 | 315-0223-00 | 672-1299-00 | 672-1299-04 | RES,FXD,FILM:22K OHM,5%,0.25W | 80009 | 315-0223-00 |
| A10A1R549 | 315-0333-00 | 672-1299-00 | 672-1299-04 | RES,FXD,FILM:33K OHM,5%,0.25W | 80009 | 315-0333-00 |
| A10A1R549 | 131-0566-00 | 672-1299-05 | | BUS,CONDUCTOR:DUMMY RES,0.094 OD X 0.225 L | 80009 | 131-0566-00 |
| A10A1R550 | 315-0220-00 | | | RES,FXD,FILM:22 OHM,5%,0.25W | 80009 | 315-0220-00 |
| A10A1R562 | 315-0182-00 | | | RES,FXD,FILM:1.8K OHM,5%,0.25W | 80009 | 315-0182-00 |
| A10A1R564 | 315-0302-00 | | | RES,FXD,FILM:3K OHM,5%,0.25W | 80009 | 315-0302-00 |
| A10A1R568 | 315-0562-00 | | | RES,FXD,FILM:5.6K OHM,5%,0.25W | 80009 | 315-0562-00 |
| A10A1R569 | 315-0221-00 | | | RES,FXD,FILM:220 OHM,5%,0.25W | 80009 | 315-0221-00 |
| A10A1R572 | 321-0929-07 | | | RES,FXD,FILM:2.5K OHM,0.1%,0.125W,TC=T9 | 80009 | 321-0929-07 |
| A10A1R574 | 321-0926-07 | | | RES,FXD,FILM:4K OHM,0.1%,0.125W,TC=T9 | 19701 | 5033RE4K00B |
| A10A1R575 | 321-0239-07 | | | RES,FXD,FILM:3.01K OHM,0.1%,0.125W,TC=T9MI | 07716 | CEAE30100B |
| A10A1R576 | 315-0471-00 | | | RES,FXD,FILM:470 OHM,5%,0.25W | 80009 | 315-0471-00 |
| A10A1R580 | 315-0103-00 | | | RES,FXD,FILM:10K OHM,5%,0.25W | 80009 | 315-0103-00 |
| A10A1R648 | 307-0103-00 | | | RES,FXD,CMPSN:2.7 OHM,5%,0.25W | 80009 | 307-0103-00 |
| A10A1R649 | 307-0103-00 | | | RES,FXD,CMPSN:2.7 OHM,5%,0.25W | 80009 | 307-0103-00 |
| A10A1R680 | 322-3289-07 | | | RES,FXD,FILM:10K OHM,0.1%,0.2W,TC=T9,T&R,SM ALL BODY | 80009 | 322-3289-07 |
| A10A1R742 | 315-0220-00 | | | RES,FXD,FILM:22 OHM,5%,0.25W | 80009 | 315-0220-00 |
| A10A1R761 | 315-0133-00 | | | RES,FXD,FILM:13K OHM,5%,0.25W | 80009 | 315-0133-00 |
| A10A1R762 | 315-0133-00 | | | RES,FXD,FILM:13K OHM,5%,0.25W | 80009 | 315-0133-00 |
| A10A1R764 | 315-0331-00 | | | RES,FXD,FILM:330 OHM,5%,0.25W | 80009 | 315-0331-00 |
| A10A1R765 | 315-0273-00 | | | RES,FXD,FILM:27K OHM,5%,0.25W | 80009 | 315-0273-00 |
| A10A1R768 | 321-0239-07 | | | RES,FXD,FILM:3.01K OHM,0.1%,0.125W,TC=T9MI | 07716 | CEAE30100B |
| A10A1R769 | 321-0239-07 | | | RES,FXD,FILM:3.01K OHM,0.1%,0.125W,TC=T9MI | 07716 | CEAE30100B |
| A10A1R770 | 321-0816-07 | | | RES,FXD,FILM:5K OHM,0.1%,0.125W,TC=T9 | 80009 | 321-0816-07 |
| A10A1R771 | 321-0816-07 | | | RES,FXD,FILM:5K OHM,0.1%,0.125W,TC=T9 | 80009 | 321-0816-07 |
| A10A1R772 | 321-0816-07 | | | RES,FXD,FILM:5K OHM,0.1%,0.125W,TC=T9 | 80009 | 321-0816-07 |
| A10A1R774 | 321-0816-07 | | | RES,FXD,FILM:5K OHM,0.1%,0.125W,TC=T9 | 80009 | 321-0816-07 |
| A10A1R775 | 315-0391-00 | | | RES,FXD,FILM:390 OHM,5%,0.25W | 80009 | 315-0391-00 |
| A10A1R776 | 315-0391-00 | | | RES,FXD,FILM:390 OHM,5%,0.25W | 80009 | 315-0391-00 |
| A10A1R864 | 315-0102-00 | | | RES,FXD,FILM:1K OHM,5%,0.25W | 80009 | 315-0102-00 |
| A10A1T558 | 120-1640-00 | | | TRANSFORMER,RF:Z603 | 80009 | 120-1640-00 |
| A10A1TP195 | 214-4085-00 | | | TERM,TEST POINT:0.070 ID,0.220 H,0.063 DIA PCB,0.015 X 0.032 BRASS,W/ RED NYLON COLLAR | 26364 | 104-01-02 |
| A10A1TP311 | 214-4085-00 | | | TERM,TEST POINT:0.070 ID,0.220 H,0.063 DIA PCB,0.015 X 0.032 BRASS,W/ RED NYLON COLLAR | 26364 | 104-01-02 |
| A10A1TP315 | 214-4085-00 | | | TERM,TEST POINT:0.070 ID,0.220 H,0.063 DIA PCB,0.015 X 0.032 BRASS,W/ RED NYLON COLLAR | 26364 | 104-01-02 |
| A10A1TP342 | 214-4085-00 | | | TERM,TEST POINT:0.070 ID,0.220 H,0.063 DIA PCB,0.015 X 0.032 BRASS,W/ RED NYLON COLLAR | 26364 | 104-01-02 |
| A10A1TP345 | 214-4085-00 | | | TERM,TEST POINT:0.070 ID,0.220 H,0.063 DIA PCB,0.015 X 0.032 BRASS,W/ RED NYLON COLLAR | 26364 | 104-01-02 |
| A10A1TP358 | 214-4085-00 | | | TERM,TEST POINT:0.070 ID,0.220 H,0.063 DIA PCB,0.015 X 0.032 BRASS,W/ RED NYLON COLLAR | 26364 | 104-01-02 |
| A10A1TP455 | 214-4085-00 | | | TERM,TEST POINT:0.070 ID,0.220 H,0.063 DIA PCB,0.015 X 0.032 BRASS,W/ RED NYLON COLLAR | 26364 | 104-01-02 |
| A10A1TP558 | 214-4085-00 | | | TERM,TEST POINT:0.070 ID,0.220 H,0.063 DIA PCB,0.015 X 0.032 BRASS,W/ RED NYLON COLLAR | 26364 | 104-01-02 |
| A10A1TP562 | 214-4085-00 | | | TERM,TEST POINT:0.070 ID,0.220 H,0.063 DIA PCB,0.015 X 0.032 BRASS,W/ RED NYLON COLLAR | 26364 | 104-01-02 |
| A10A1TP568 | 214-4085-00 | | | TERM,TEST POINT:0.070 ID,0.220 H,0.063 DIA PCB,0.015 X 0.032 BRASS,W/ RED NYLON COLLAR | 26364 | 104-01-02 |
| A10A1TP580 | 214-4085-00 | | | TERM,TEST POINT:0.070 ID,0.220 H,0.063 DIA PCB,0.015 X 0.032 BRASS,W/ RED NYLON COLLAR | 26364 | 104-01-02 |
| A10A1TP582 | 214-4085-00 | | | TERM,TEST POINT:0.070 ID,0.220 H,0.063 DIA PCB,0.015 X 0.032 BRASS,W/ RED NYLON COLLAR | 26364 | 104-01-02 |
| A10A1TP658 | 214-4085-00 | | | TERM,TEST POINT:0.070 ID,0.220 H,0.063 DIA PCB,0.015 X 0.032 BRASS,W/ RED NYLON COLLAR | 26364 | 104-01-02 |

| Component No. | Tektronix Part No. | Serial/Assembly No. Effective | Dscont | Name & Description | Mfr. Code | Mfr. Part No. |
|---|---|---|---|---|---|---|
| A10A1TP862 | 214-4085-00 | | | TERM,TEST POINT:0.070 ID,0.220 H,0.063 DIA PCB,0.015 X 0.032 BRASS,W/ RED NYLON COLLAR | 26364 | 104-01-02 |
| A10A1TP919 | 214-4085-00 | | | TERM,TEST POINT:0.070 ID,0.220 H,0.063 DIA PCB,0.015 X 0.032 BRASS,W/ RED NYLON COLLAR | 26364 | 104-01-02 |
| A10A1TP962 | 214-4085-00 | | | TERM,TEST POINT:0.070 ID,0.220 H,0.063 DIA PCB,0.015 X 0.032 BRASS,W/ RED NYLON COLLAR | 26364 | 104-01-02 |
| A10A1TP990 | 214-4085-00 | | | TERM,TEST POINT:0.070 ID,0.220 H,0.063 DIA PCB,0.015 X 0.032 BRASS,W/ RED NYLON COLLAR | 26364 | 104-01-02 |
| A10A1U144 | 156-1998-00 | | | IC,DIGITAL:ALSTTL,FLIP FLOP;OCTAL D-TYPE, W /CLEAR;74ALS273,DIP20.3 | 01295 | SN74ALS273 |
| A10A1U175 | 156-2392-00 | | | IC,DIGITAL:HCMOS,GATE;HEX INV, SCHMITT TRIG ;74HC14,DIP14.3,TUBE | 80009 | 156-2392-00 |
| A10A1U185 | 156-2094-00 | | | IC,DIGITAL:ALSTTL,GATE;HEX INV;74ALS04,DIP1 4.3,TUBE | 01295 | SN74ALS04BN3/J4 |
| A10A1U321 | 156-3074-01 | 672-1299-00 | 672-1299-04 | IC,MISC:BIPOLAR,WAVEFORM GENERATOR;SINE,SQU ARE,TRIANGLE;XR8038ACN,DIP14.3 CERAMIC PKG | 80009 | 156-3074-01 |
| A10A1U346 | 156-1367-00 | | | IC,CONVERTER:CMOS,D/A;8 BIT,400NS,CURRENT O UT,MPU COMPATIBLE,MULTIPLYING;AD7524JN,DIP1 6.3 | 80009 | 156-1367-00 |
| A10A1U362 | 156-3509-00 | | | IC,DIGITAL:FTTL,COUNTER;SYNCH 8-BIT UP/DOWN BINARY, 3-STATE;74F1779,DIP16.3,TUBE | 80009 | 156-3509-00 |
| A10A1U376 | 160-6100-00 | | | MICROCKT,DGTL:STTL,OCTAL 16 INP RGTR,PRGM *MOUNTING PARTS* | 80009 | 160-6100-00 |
| | 136-0752-00 | | | SKT,PL-IN ELEK:MICROCIRCUIT,20 DIP *END MOUNTING PARTS* | 09922 | DILB20P-108 |
| A10A1U392 | 156-2100-00 | | | IC,DIGITAL:ALSTTL,DEMUX/DECODER;3-TO-8 LINE DECODER;74ALS138,DIP16.3,TUBE | 01295 | SN74ALS138N3 |
| A10A1U421 | 156-3166-00 | | | IC,MISC:CMOS,ANALOG SWITCH;DUAL DPST,55 OHM ,+/-15V;DG405,DIP16.3 | 80009 | 156-3166-00 |
| A10A1U432 | 156-2092-00 | 672-1299-03 | 672-1299-03 | IC,DIGITAL:ALSTTL,GATE;QUAD 2-INPUT NOR;74A LS02,DIP14.3,TUBE | 01295 | SN74ALS02N3 |
| A10A1U432 | 156-3626-00 | 672-1299-04 | | IC,DIGITAL:HCTCMOS,GATE;QUAD 2-INPUT NOR;74 HCT02,DIP14.3,TUBE | 80009 | 156-3626-00 |
| A10A1U446 | 156-2873-00 | | | IC,LINEAR:BIFET,OP-AMP;DUAL;MC34082P,DIP08. 3 | 80009 | 156-2873-00 |
| A10A1U462 | 156-1754-01 | | | IC,DIGITAL:ALSTTL,BUFFER/DRIVER;OCTAL NONIN V, 3-STATE;74ALS244,DIP20.3,TUBE | 01295 | SN74ALS244AN3 |
| A10A1U476 | 156-2347-00 | | | IC,CONVERTER:TTL,A/D;10-BIT,219US,SAR,BYTE OUTPUT;ADC1001,DIP20.3 | 27014 | ADC1001CCJA+ |
| A10A1U492 | 156-2100-00 | | | IC,DIGITAL:ALSTTL,DEMUX/DECODER;3-TO-8 LINE DECODER;74ALS138,DIP16.3,TUBE | 01295 | SN74ALS138N3 |
| A10A1U521 | 156-3166-00 | | | IC,MISC:CMOS,ANALOG SWITCH;DUAL DPST,55 OHM ,+/-15V;DG405,DIP16.3 | 80009 | 156-3166-00 |
| A10A1U532 | 156-3166-00 | | | IC,MISC:CMOS,ANALOG SWITCH;DUAL DPST,55 OHM ,+/-15V;DG405,DIP16.3 | 80009 | 156-3166-00 |
| A10A1U592 | 156-2100-00 | | | IC,DIGITAL:ALSTTL,DEMUX/DECODER;3-TO-8 LINE DECODER;74ALS138,DIP16.3,TUBE | 01295 | SN74ALS138N3 |
| A10A1U621 | 156-3166-00 | | | IC,MISC:CMOS,ANALOG SWITCH;DUAL DPST,55 OHM ,+/-15V;DG405,DIP16.3 | 80009 | 156-3166-00 |
| A10A1U632 | 156-3166-00 | | | IC,MISC:CMOS,ANALOG SWITCH;DUAL DPST,55 OHM ,+/-15V;DG405,DIP16.3 | 80009 | 156-3166-00 |
| A10A1U662 | 156-0407-00 | | | IC,MISC:BIPOLAR,MULTIPLIER;FOUR QUADRANT;MC 1495L,DIP14.3 | 04713 | MC1495L |
| A10A1U674 | 156-2817-00 | | | IC,LINEAR:BIFET,OP-AMP;QUAD;MC34084P,DIP14. 3 | 80009 | 156-2817-00 |
| A10A1U684 | 156-1225-00 | | | IC,LINEAR:BIPOLAR,COMPARATOR;DUAL,OPEN COLL ECTOR,300NS;LM393N,DIP08.3 | 01295 | LM393P |
| A10A1U721 | 156-3166-00 | | | IC,MISC:CMOS,ANALOG SWITCH;DUAL DPST,55 OHM ,+/-15V;DG405,DIP16.3 | 80009 | 156-3166-00 |

| Component No. | Tektronix Part No. | Serial/Assembly No. Effective | Dscont | Name & Description | Mfr. Code | Mfr. Part No. |
|---|---|---|---|---|---|---|
| A10A1U732 | 156-3166-00 | | | IC,MISC:CMOS,ANALOG SWITCH;DUAL DPST,55 OHM ,+/-15V;DG405,DIP16.3 | 80009 | 156-3166-00 |
| A10A1U755 | 156-3166-00 | | | IC,MISC:CMOS,ANALOG SWITCH;DUAL DPST,55 OHM ,+/-15V;DG405,DIP16.3 | 80009 | 156-3166-00 |
| A10A1U855 | 156-3166-00 | | | IC,MISC:CMOS,ANALOG SWITCH;DUAL DPST,55 OHM ,+/-15V;DG405,DIP16.3 | 80009 | 156-3166-00 |
| A10A1U870 | 156-3311-00 | | | IC,MISC:CMOS,ANALOG SWITCH;QUAD,HIGH SPEED MONOLITHIC;DG271C,DIP16.3 | 80009 | 156-3311-00 |
| A10A1VR928 | 152-0243-00 | | | DIODE,ZENER:,;15V,5%,0.4W;1N965B,DO-7 OR 35 ,TR | 14433 | Z5412 |
| A10A1VR929 | 152-0243-00 | | | DIODE,ZENER:,;15V,5%,0.4W;1N965B,DO-7 OR 35 ,TR | 14433 | Z5412 |

| Component No. | Tektronix Part No. | Serial/Assembly No. Effective | Dscont | Name & Description | Mfr. Code | Mfr. Part No. |
|---|---|---|---|---|---|---|
| A10A1A1 | ----- ----- | 672-1299-05 | | CIRCUIT BD ASSY:OSCILLATOR<br>(FOR REPLACEMENT SEE A10)<br>*ATTACHED PARTS* | | |
| | 131-0590-00 | | | TERMINAL,PIN:0.71 L X 0.025 SQ PH BRZ<br>(QUANTITY 14) | 80009 | 131-0590-00 |
| | 214-1721-00 | | | PIN,SPRING:0.375 L X 0.069,CS CD PL<br>(QUANTITY 4) | 22599 | 52-012-062-0375 |
| | 214-4085-00 | | | TERM,TEST POINT:0.070 ID,0.220 H,0.063 DIA<br>PCB,0.015 X 0.032 BRASS,W/ RED NYLON COLLAR<br>*END ATTACHED PARTS* | 26364 | 104-01-02 |
| A10A1A1C300 | 283-0203-00 | 672-1299-05 | | CAP,FXD,CER DI:0.47UF,20%,50V | 80009 | 283-0203-00 |
| A10A1A1C302 | 283-0647-00 | 672-1299-05 | | CAP,FXD,MICA DI:70PF,1%,100V | 80009 | 283-0647-00 |
| A10A1A1C304 | 283-0647-00 | 672-1299-05 | | CAP,FXD,MICA DI:70PF,1%,100V | 80009 | 283-0647-00 |
| A10A1A1C306 | 283-0111-00 | 672-1299-05 | | CAP,FXD,CER DI:0.1UF,20%,50V | 80009 | 283-0111-00 |
| A10A1A1CR310 | 152-0195-00 | 672-1299-05 | | DIODE,ZENER:,;5.1V,5%,0.4W;1N751A FMLY,DO-35 OR 7 | 80009 | 152-0195-00 |
| A10A1A1CR312 | 152-0195-00 | 672-1299-05 | | DIODE,ZENER:,;5.1V,5%,0.4W;1N751A FMLY,DO-35 OR 7 | 80009 | 152-0195-00 |
| A10A1A1R300 | 311-1920-00 | 672-1299-05 | | RES,VAR,NONWW:TRMR,500 OHM,10%,0.5 W | 32997 | 3386C-1-501 |
| A10A1A1R302 | 322-3346-00 | 672-1299-05 | | RES,FXD:METAL FILM;39.2K OHM,1%,0.2W,TC=100 PPM;AXIAL,T&R,SMALL BODY | 80009 | 322-3346-00 |
| A10A1A1R304 | 322-3243-00 | 672-1299-05 | | RES,FXD:METAL FILM;3.32K OHM,1%,0.2W,TC=100 PPM;AXIAL,T&R,SMALL BODY | 91637 | CCF50-1-G33200F |
| A10A1A1R306 | 322-3385-00 | 672-1299-05 | | RES,FXD:METAL FILM;100K OHM,1%,0.2W,TC=100 PPM;AXIAL,T&R,SMALL BODY | 57668 | CRB20 FXE 100K |
| A10A1A1R308 | 322-3269-00 | 672-1299-05 | | RES,FXD,FILM:6.19K OHM,1%,0.2W,TC=T0 | 57668 | CRB20 FXE 6K19 |
| A10A1A1R310 | 322-3306-00 | 672-1299-05 | | RES,FXD:METAL FILM;15K OHM,1%,0.2W,TC=100 PPM;AXIAL,T&R,SMALL BODY | 57668 | CRB20 FXE 15K0 |
| A10A1A1R316 | 322-3484-00 | 672-1299-05 | | RES,FXD,FILM:600 OHM,1%,0.2W,TC=T0 | 80009 | 322-3484-00 |
| A10A1A1R318 | 311-1920-00 | 672-1299-05 | | RES,VAR,NONWW:TRMR,500 OHM,10%,0.5 W | 32997 | 3386C-1-501 |
| A10A1A1R320 | 322-3231-00 | 672-1299-05 | | RES,FXD,FILM:2.49K OHM,1%,0.2W,TC=T0 | 80009 | 322-3231-00 |
| A10A1A1U320 | 156-2873-00 | 672-1299-05 | | IC,LINEAR:BIFET,OP-AMP;DUAL;MC34082P,DIP08.3 | 80009 | 156-2873-00 |

| Component No. | Tektronix Part No. | Serial/Assembly No. Effective | Dscont | Name & Description | Mfr. Code | Mfr. Part No. |
|---|---|---|---|---|---|---|
| A10A2 | ----- ----- | | | CIRCUIT BD ASSY:KEY<br>(FOR REPLACEMENT SEE A10) | | |
| A10A2C152 | 281-0775-01 | | | CAP,FXD,CER DI:0.1UF,20%,50V | 04222 | SA105E104MAA |
| A10A2C344 | 281-0775-01 | | | CAP,FXD,CER DI:0.1UF,20%,50V | 04222 | SA105E104MAA |
| A10A2C360 | 281-0775-01 | | | CAP,FXD,CER DI:0.1UF,20%,50V | 04222 | SA105E104MAA |
| A10A2C460 | 281-0775-01 | | | CAP,FXD,CER DI:0.1UF,20%,50V | 04222 | SA105E104MAA |
| A10A2C532 | 281-0775-01 | | | CAP,FXD,CER DI:0.1UF,20%,50V | 04222 | SA105E104MAA |
| A10A2C544 | 281-0775-01 | | | CAP,FXD,CER DI:0.1UF,20%,50V | 04222 | SA105E104MAA |
| A10A2C560 | 281-0775-01 | | | CAP,FXD,CER DI:0.1UF,20%,50V | 04222 | SA105E104MAA |
| A10A2DS142 | 150-1029-00 | | | LT EMITTING DIO:GREEN,565NM,35MA<br>*MOUNTING PARTS* | 58361 | Q6480/MV5274C |
| | 352-0866-00 | 672-1299-03 | 672-1299-06 | HOLDER,LED:DUAL | 80009 | 352-0866-00 |
| | 352-0866-01 | 672-1299-06 | | HOLDER,LED:DUAL<br>(QUANTITY 1 AT DS142/DS144)<br>*END MOUNTING PARTS* | 80009 | 352-0866-01 |
| A10A2DS144 | 150-1064-00 | | | LT EMITTING DIO:YELLOW,585NM,40 MA MAX | 80009 | 150-1064-00 |
| A10A2DS242 | 150-1029-00 | | | LT EMITTING DIO:GREEN,565NM,35MA<br>*MOUNTING PARTS* | 58361 | Q6480/MV5274C |
| | 352-0866-00 | | | HOLDER,LED:DUAL<br>(QUANTITY 1 AT DS242/DS244)<br>*END MOUNTING PARTS* | 80009 | 352-0866-00 |
| A10A2DS244 | 150-1064-00 | | | LT EMITTING DIO:YELLOW,585NM,40 MA MAX | 80009 | 150-1064-00 |
| A10A2R140 | 307-0738-00 | | | RES NTWK,FXD,FI:10,270 OHM,2%,0.19 EACH | 91637 | CSC11B-1-271G |
| A10A2R160 | 307-0862-00 | | | RES NTWK,FXD,FI:9,18K OHM,2%,0.15W EACH | 80009 | 307-0862-00 |
| A10A2R420 | 307-0738-00 | | | RES NTWK,FXD,FI:10,270 OHM,2%,0.19 EACH | 91637 | CSC11B-1-271G |
| A10A2R440 | 307-0862-00 | | | RES NTWK,FXD,FI:9,18K OHM,2%,0.15W EACH | 80009 | 307-0862-00 |
| A10A2R540 | 307-0862-00 | | | RES NTWK,FXD,FI:9,18K OHM,2%,0.15W EACH | 80009 | 307-0862-00 |
| A10A2S110 | 260-2384-00 | | | SWITCH,PUSH:3-5MA,1K OHM,10M<br>*ATTACHED PARTS* | 80009 | 260-2384-00 |
| | 366-0671-00 | | | PUSH BUTTON:W/LENS,HL20-1101<br>*END ATTACHED PARTS* | 80009 | 366-0671-00 |
| A10A2S120 | 260-2384-00 | | | SWITCH,PUSH:3-5MA,1K OHM,10M<br>*ATTACHED PARTS* | 80009 | 260-2384-00 |
| | 366-0671-00 | | | PUSH BUTTON:W/LENS,HL20-1101<br>*END ATTACHED PARTS* | 80009 | 366-0671-00 |
| A10A2S130 | 260-2384-00 | | | SWITCH,PUSH:3-5MA,1K OHM,10M<br>*ATTACHED PARTS* | 80009 | 260-2384-00 |
| | 366-0671-00 | | | PUSH BUTTON:W/LENS,HL20-1101<br>*END ATTACHED PARTS* | 80009 | 366-0671-00 |
| A10A2S150 | 260-2384-00 | | | SWITCH,PUSH:3-5MA,1K OHM,10M<br>*ATTACHED PARTS* | 80009 | 260-2384-00 |
| | 366-0672-00 | | | PUSH BUTTON:W/O LENS,HL20-0101<br>*END ATTACHED PARTS* | 80009 | 366-0672-00 |
| A10A2S160 | 260-2384-00 | | | SWITCH,PUSH:3-5MA,1K OHM,10M<br>*ATTACHED PARTS* | 80009 | 260-2384-00 |
| | 366-0672-00 | | | PUSH BUTTON:W/O LENS,HL20-0101<br>*END ATTACHED PARTS* | 80009 | 366-0672-00 |
| A10A2S210 | 260-2384-00 | | | SWITCH,PUSH:3-5MA,1K OHM,10M<br>*ATTACHED PARTS* | 80009 | 260-2384-00 |
| | 366-0671-00 | | | PUSH BUTTON:W/LENS,HL20-1101<br>*END ATTACHED PARTS* | 80009 | 366-0671-00 |
| A10A2S220 | 260-2384-00 | | | SWITCH,PUSH:3-5MA,1K OHM,10M<br>*ATTACHED PARTS* | 80009 | 260-2384-00 |
| | 366-0671-00 | | | PUSH BUTTON:W/LENS,HL20-1101<br>*END ATTACHED PARTS* | 80009 | 366-0671-00 |
| A10A2S230 | 260-2384-00 | | | SWITCH,PUSH:3-5MA,1K OHM,10M<br>*ATTACHED PARTS* | 80009 | 260-2384-00 |
| | 366-0671-00 | | | PUSH BUTTON:W/LENS,HL20-1101<br>*END ATTACHED PARTS* | 80009 | 366-0671-00 |
| A10A2S250 | 260-2384-00 | | | SWITCH,PUSH:3-5MA,1K OHM,10M<br>*ATTACHED PARTS* | 80009 | 260-2384-00 |
| | 366-0672-00 | | | PUSH BUTTON:W/O LENS,HL20-0101 | 80009 | 366-0672-00 |

| Component No. | Tektronix Part No. | Serial/Assembly No. Effective | Dscont | Name & Description | Mfr. Code | Mfr. Part No. |
|---|---|---|---|---|---|---|
| | | | | *END ATTACHED PARTS* | | |
| A10A2S260 | 260-2384-00 | | | SWITCH,PUSH:3-5MA,1K OHM,10M | 80009 | 260-2384-00 |
| | | | | *ATTACHED PARTS* | | |
| | 366-0672-00 | | | PUSH BUTTON:W/O LENS,HL20-0101 | 80009 | 366-0672-00 |
| | | | | *END ATTACHED PARTS* | | |
| A10A2S310 | 260-2384-00 | | | SWITCH,PUSH:3-5MA,1K OHM,10M | 80009 | 260-2384-00 |
| | | | | *ATTACHED PARTS* | | |
| | 366-0671-00 | | | PUSH BUTTON:W/LENS,HL20-1101 | 80009 | 366-0671-00 |
| | | | | *END ATTACHED PARTS* | | |
| A10A2S320 | 260-2384-00 | | | SWITCH,PUSH:3-5MA,1K OHM,10M | 80009 | 260-2384-00 |
| | | | | *ATTACHED PARTS* | | |
| | 366-0671-00 | | | PUSH BUTTON:W/LENS,HL20-1101 | 80009 | 366-0671-00 |
| | | | | *END ATTACHED PARTS* | | |
| A10A2S330 | 260-2384-00 | | | SWITCH,PUSH:3-5MA,1K OHM,10M | 80009 | 260-2384-00 |
| | | | | *ATTACHED PARTS* | | |
| | 366-0671-00 | | | PUSH BUTTON:W/LENS,HL20-1101 | 80009 | 366-0671-00 |
| | | | | *END ATTACHED PARTS* | | |
| A10A2S340 | 260-2384-00 | | | SWITCH,PUSH:3-5MA,1K OHM,10M | 80009 | 260-2384-00 |
| | | | | *ATTACHED PARTS* | | |
| | 366-0671-00 | | | PUSH BUTTON:W/LENS,HL20-1101 | 80009 | 366-0671-00 |
| | | | | *END ATTACHED PARTS* | | |
| A10A2S410 | 260-2384-00 | | | SWITCH,PUSH:3-5MA,1K OHM,10M | 80009 | 260-2384-00 |
| | | | | *ATTACHED PARTS* | | |
| | 366-0671-00 | | | PUSH BUTTON:W/LENS,HL20-1101 | 80009 | 366-0671-00 |
| | | | | *END ATTACHED PARTS* | | |
| A10A2S420 | 260-2384-00 | | | SWITCH,PUSH:3-5MA,1K OHM,10M | 80009 | 260-2384-00 |
| | | | | *ATTACHED PARTS* | | |
| | 366-0671-00 | | | PUSH BUTTON:W/LENS,HL20-1101 | 80009 | 366-0671-00 |
| | | | | *END ATTACHED PARTS* | | |
| A10A2S430 | 260-2384-00 | | | SWITCH,PUSH:3-5MA,1K OHM,10M | 80009 | 260-2384-00 |
| | | | | *ATTACHED PARTS* | | |
| | 366-0671-00 | | | PUSH BUTTON:W/LENS,HL20-1101 | 80009 | 366-0671-00 |
| | | | | *END ATTACHED PARTS* | | |
| A10A2S450 | 311-2193-00 | | | ENCODER,DIGITAL:INCREMENTAL,2 CHAN,50PPR/CH | TK0510 | EWT-XAK019508 |
| A10A2S510 | 260-2384-00 | | | SWITCH,PUSH:3-5MA,1K OHM,10M | 80009 | 260-2384-00 |
| | | | | *ATTACHED PARTS* | | |
| | 366-0671-00 | | | PUSH BUTTON:W/LENS,HL20-1101 | 80009 | 366-0671-00 |
| | | | | *END ATTACHED PARTS* | | |
| A10A2S520 | 260-2384-00 | | | SWITCH,PUSH:3-5MA,1K OHM,10M | 80009 | 260-2384-00 |
| | | | | *ATTACHED PARTS* | | |
| | 366-0671-00 | | | PUSH BUTTON:W/LENS,HL20-1101 | 80009 | 366-0671-00 |
| | | | | *END ATTACHED PARTS* | | |
| A10A2S530 | 260-2384-00 | | | SWITCH,PUSH:3-5MA,1K OHM,10M | 80009 | 260-2384-00 |
| | | | | *ATTACHED PARTS* | | |
| | 366-0671-00 | | | PUSH BUTTON:W/LENS,HL20-1101 | 80009 | 366-0671-00 |
| | | | | *END ATTACHED PARTS* | | |
| A10A2U154 | 156-3113-00 | | | IC,DIGITAL:HCMOS;BUFFER;OCTAL INV, BUFFER/D RIVER, 3-STATE;74HC240,DIP20.3,TUBE | 80009 | 156-3113-00 |
| A10A2U362 | 156-1998-00 | | | IC,DIGITAL:ALSTTL,FLIP FLOP;OCTAL D-TYPE, W /CLEAR;74ALS273,DIP20.3 | 01295 | SN74ALS273 |
| A10A2U440 | 156-3113-00 | | | IC,DIGITAL:HCMOS;BUFFER;OCTAL INV, BUFFER/D RIVER, 3-STATE;74HC240,DIP20.3,TUBE | 80009 | 156-3113-00 |
| A10A2U462 | 156-1998-00 | | | IC,DIGITAL:ALSTTL,FLIP FLOP;OCTAL D-TYPE, W /CLEAR;74ALS273,DIP20.3 | 01295 | SN74ALS273 |
| A10A2U540 | 156-3113-00 | | | IC,DIGITAL:HCMOS;BUFFER;OCTAL INV, BUFFER/D RIVER, 3-STATE;74HC240,DIP20.3,TUBE | 80009 | 156-3113-00 |
| A10A2U562 | 156-1998-00 | | | IC,DIGITAL:ALSTTL,FLIP FLOP;OCTAL D-TYPE, W /CLEAR;74ALS273,DIP20.3 | 01295 | SN74ALS273 |

| Component No. | Tektronix Part No. | Serial/Assembly No. Effective | Dscont | Name & Description | Mfr. Code | Mfr. Part No. |
|---|---|---|---|---|---|---|
| A11 | 672-1298-00 | | | CIRCUIT BD ASSY:MOTHER | 80009 | 672-1298-00 |
| | | | | *ATTACHED PARTS* | | |
| | 129-0208-00 | | | SPACER,POST:0.312 L,6-32 STUD,BRS,ALBALOY P L,0.25 HEX | 80009 | 129-0208-00 |
| | | | | (QUANTITY 6) | | |
| | 174-0841-00 | | | CA ASSY,SP,ELEC:10,18 AWG,4.88 L,RIBBON | 80009 | 174-0841-00 |
| | 196-3165-00 | | | LEAD,ELECTRICAL:12 AWG,4.4 L,BLACK | 80009 | 196-3165-00 |
| | | | | (QUANTITY 2) | | |
| | 196-3166-00 | | | LEAD,ELECTRICAL:12 AWG,4.5 L,RED | 80009 | 196-3166-00 |
| | | | | (QUANTITY 2) | | |
| | 210-0055-00 | | | WASHER,LOCK:#6 SPLIT,0.031 THK,STL | 81350 | ORDER BY DESCR |
| | 210-0408-00 | | | NUT,PLAIN,HEX:6-32 X 0.312,BRS CD PL | 73743 | 3040-402 |
| | | | | (QUANTITY 8) | | |
| | 211-0244-00 | | | SCR,ASSEM WSHR:4-40 X 0.312,PNH STL | TK0858 | 211-0244-00 |
| | | | | (QUANTITY 2) | | |
| | 211-0507-00 | | | SCREW,MACHINE:6-32 X 0.312,PNH,STL | 83385 | ORDER BY DESCR |
| | 211-0510-00 | | | SCREW,MACHINE:6-32 X 0.375,PNH,STL | 83385 | ORDER BY DESCR |
| | | | | (QUANTITY 2) | | |
| | 211-0514-00 | | | SCREW,MACHINE:6-32 X 0.750,PNH,STL | 93907 | B20-70350 |
| | | | | (QUANTITY 2) | | |
| | 211-0658-00 | | | SCR,ASSEM WSHR:6-32 X 0.312,PNH,STL,POZ | 78189 | S51-060545-0X |
| | | | | (QUANTITY 5) | | |
| | 385-0079-00 | | | SPACER,POST:0.375 L W/6-32 THD THRU,AL | 80009 | 385-0079-00 |
| | | | | (QUANTITY 8) | | |
| | 385-0109-00 | | | SPACER,POST:0.312 L W/4-40 THD THRU,NYL | 80009 | 385-0109-00 |
| | | | | (QUANTITY 2) | | |
| | | | | *END ATTACHED PARTS* | | |

| Component No. | Tektronix Part No. | Serial/Assembly No. Effective | Dscont | Name & Description | Mfr. Code | Mfr. Part No. |
|---|---|---|---|---|---|---|
| A11A1 | 671-0114-00 | | | CIRCUIT BD ASSY:BUS INTERCONNECT | 80009 | 671-0114-00 |
| A11A1J310 | 131-3516-00 | | | CONN,DIN::PCB,;MALE,STR,3 X 50,0.1 CTR,0.45 7 H X 0.157 TAIL,30 GOLD;,, | 80009 | 131-3516-00 |
| | | | | *MOUNTING PARTS* | | |
| | 210-0001-00 | | | WASHER,LOCK:#2 INTL,0.013 THK,STL (QUANTITY 2) | 77900 | 1202-00-00-0541C |
| | 210-0405-00 | | | NUT,PLAIN,HEX:2-56 X 0.188,BRS CD PL (QUANTITY 2) | 73743 | 12157-50 |
| | 211-0062-00 | | | SCREW,MACHINE:2-56 X 0.312,PNH,STL (QUANTITY 2) | 06950 | ORDER BY DESCR |
| | | | | *END MOUNTING PARTS* | | |
| A11A1J320 | 131-3516-00 | | | CONN,DIN::PCB,;MALE,STR,3 X 50,0.1 CTR,0.45 7 H X 0.157 TAIL,30 GOLD;,, | 80009 | 131-3516-00 |
| | | | | *MOUNTING PARTS* | | |
| | 210-0001-00 | | | WASHER,LOCK:#2 INTL,0.013 THK,STL (QUANTITY 2) | 77900 | 1202-00-00-0541C |
| | 210-0405-00 | | | NUT,PLAIN,HEX:2-56 X 0.188,BRS CD PL (QUANTITY 2) | 73743 | 12157-50 |
| | 211-0062-00 | | | SCREW,MACHINE:2-56 X 0.312,PNH,STL (QUANTITY 2) | 06950 | ORDER BY DESCR |
| | | | | *END MOUNTING PARTS* | | |

| Component No. | Tektronix Part No. | Serial/Assembly No. Effective | Dscont | Name & Description | Mfr. Code | Mfr. Part No. |
|---|---|---|---|---|---|---|
| A11A2 | 671-0113-00 | | | CIRCUIT BD ASSY:MAIN INTERFACE,RIGHT | 80009 | 671-0113-00 |
| | | | | *ATTACHED PARTS* | | |
| | 131-1425-00 | | | CONN,HDR:PCB,;MALE,RTANG,1 X 36,0.1 CTR,0.2 30 MLG X 0.090 TAIL,30 GOLD,STACKABLE;,, | 22526 | 65521-136 |
| | | | | *END ATTACHED PARTS* | | |
| A11A2C230 | 290-0984-00 | | | CAP,FXD,ELCTLT:1000UF,20%,50V | 55680 | TLB1H102MCA |
| A11A2C240 | 290-0963-00 | | | CAP,FXD,ELCTLT:220UF,+50-20%,25WVDC | 80009 | 290-0963-00 |
| A11A2C242 | 290-0963-00 | | | CAP,FXD,ELCTLT:220UF,+50-20%,25WVDC | 80009 | 290-0963-00 |
| A11A2C244 | 290-0963-00 | | | CAP,FXD,ELCTLT:220UF,+50-20%,25WVDC | 80009 | 290-0963-00 |
| A11A2C246 | 290-0963-00 | | | CAP,FXD,ELCTLT:220UF,+50-20%,25WVDC | 80009 | 290-0963-00 |
| A11A2C248 | 290-0963-00 | | | CAP,FXD,ELCTLT:220UF,+50-20%,25WVDC | 80009 | 290-0963-00 |
| A11A2C257 | 283-0594-00 | | | CAP,FXD,MICA DI:0.001UF,1%,100V | 80009 | 283-0594-00 |
| A11A2C258 | 283-0594-00 | | | CAP,FXD,MICA DI:0.001UF,1%,100V | 80009 | 283-0594-00 |
| A11A2F200 | 159-0059-00 | | | FUSE,WIRE LEAD:5A,125V | 80009 | 159-0059-00 |
| A11A2J200 | 131-2909-00 | | | CONN,HDR PWR: | 27264 | 09-71-1101 |
| A11A2J210 | 131-3516-00 | | | CONN,DIN::PCB,;MALE,STR,3 X 50,0.1 CTR,0.45 7 H X 0.157 TAIL,30 GOLD;,, | 80009 | 131-3516-00 |
| | | | | *MOUNTING PARTS* | | |
| | 210-0001-00 | | | WASHER,LOCK:#2 INTL,0.013 THK,STL | 77900 | 1202-00-00-0541C |
| | | | | (QUANTITY 2) | | |
| | 210-0405-00 | | | NUT,PLAIN,HEX:2-56 X 0.188,BRS CD PL | 73743 | 12157-50 |
| | | | | (QUANTITY 2) | | |
| | 211-0062-00 | | | SCREW,MACHINE:2-56 X 0.312,PNH,STL | 06950 | ORDER BY DESCR |
| | | | | (QUANTITY 2) | | |
| | | | | *END MOUNTING PARTS* | | |
| A11A2J220 | 131-3516-00 | | | CONN,DIN::PCB,;MALE,STR,3 X 50,0.1 CTR,0.45 7 H X 0.157 TAIL,30 GOLD;,, | 80009 | 131-3516-00 |
| | | | | *MOUNTING PARTS* | | |
| | 210-0001-00 | | | WASHER,LOCK:#2 INTL,0.013 THK,STL | 77900 | 1202-00-00-0541C |
| | | | | (QUANTITY 2) | | |
| | 210-0405-00 | | | NUT,PLAIN,HEX:2-56 X 0.188,BRS CD PL | 73743 | 12157-50 |
| | | | | (QUANTITY 2) | | |
| | 211-0062-00 | | | SCREW,MACHINE:2-56 X 0.312,PNH,STL | 06950 | ORDER BY DESCR |
| | | | | (QUANTITY 2) | | |
| | | | | *END MOUNTING PARTS* | | |
| A11A2J230 | 131-3516-00 | | | CONN,DIN::PCB,;MALE,STR,3 X 50,0.1 CTR,0.45 7 H X 0.157 TAIL,30 GOLD;,, | 80009 | 131-3516-00 |
| | | | | *MOUNTING PARTS* | | |
| | 210-0001-00 | | | WASHER,LOCK:#2 INTL,0.013 THK,STL | 77900 | 1202-00-00-0541C |
| | | | | (QUANTITY 2) | | |
| | 210-0405-00 | | | NUT,PLAIN,HEX:2-56 X 0.188,BRS CD PL | 73743 | 12157-50 |
| | | | | (QUANTITY 2) | | |
| | 211-0062-00 | | | SCREW,MACHINE:2-56 X 0.312,PNH,STL | 06950 | ORDER BY DESCR |
| | | | | (QUANTITY 2) | | |
| | | | | *END MOUNTING PARTS* | | |
| A11A2J240 | 131-3516-00 | | | CONN,DIN::PCB,;MALE,STR,3 X 50,0.1 CTR,0.45 7 H X 0.157 TAIL,30 GOLD;,, | 80009 | 131-3516-00 |
| | | | | *MOUNTING PARTS* | | |
| | 210-0001-00 | | | WASHER,LOCK:#2 INTL,0.013 THK,STL | 77900 | 1202-00-00-0541C |
| | | | | (QUANTITY 2) | | |
| | 210-0405-00 | | | NUT,PLAIN,HEX:2-56 X 0.188,BRS CD PL | 73743 | 12157-50 |
| | | | | (QUANTITY 2) | | |
| | 211-0062-00 | | | SCREW,MACHINE:2-56 X 0.312,PNH,STL | 06950 | ORDER BY DESCR |
| | | | | (QUANTITY 2) | | |
| | | | | *END MOUNTING PARTS* | | |
| A11A2J245 | 131-1425-00 | | | CONN,HDR:PCB,;MALE,RTANG,1 X 36,0.1 CTR,0.2 30 MLG X 0.090 TAIL,30 GOLD,STACKABLE;,, | 22526 | 65521-136 |
| A11A2J255 | 131-1425-00 | | | CONN,HDR:PCB,;MALE,RTANG,1 X 36,0.1 CTR,0.2 30 MLG X 0.090 TAIL,30 GOLD,STACKABLE;,, | 22526 | 65521-136 |
| A11A2P260 | 131-3517-00 | | | CONN,DIN:PCB,;FEMALE,RTANG,3 X 50,0.1 CTR,0 .504 MLG X 0.118 TAIL,30 GOLD;,, | 80009 | 131-3517-00 |
| | | | | *MOUNTING PARTS* | | |
| | 210-0001-00 | | | WASHER,LOCK:#2 INTL,0.013 THK,STL | 77900 | 1202-00-00-0541C |

| Component No. | Tektronix Part No. | Serial/Assembly No. Effective | Dscont | Name & Description | Mfr. Code | Mfr. Part No. |
|---|---|---|---|---|---|---|
| | | | | (QUANTITY 2) | | |
| | 210-0405-00 | | | NUT,PLAIN,HEX:2-56 X 0.188,BRS CD PL<br>(QUANTITY 2) | 73743 | 12157-50 |
| | 211-0185-00 | | | SCREW,MACHINE:2-56 X 0.438,PNH,STL<br>(QUANTITY 2) | TK0435 | ORDER BY DESCR |
| | | | | *END MOUNTING PARTS* | | |
| A11A2R240 | 308-0240-00 | | | RES,FXD,WW:2 OHM,5%,3W | 07088 | |
| A11A2R242 | 308-0240-00 | | | RES,FXD,WW:2 OHM,5%,3W | 07088 | |

| Component No. | Tektronix Part No. | Serial/Assembly No. Effective | Dscont | Name & Description | Mfr. Code | Mfr. Part No. |
|---|---|---|---|---|---|---|
| A11A3 | 671-0112-00 | | | CIRCUIT BD ASSY:MAIN INTERFACE,LEFT | 80009 | 671-0112-00 |
| A11A3J110 | 131-3516-00 | | | CONN,DIN::PCB,;MALE,STR,3 X 50,0.1 CTR,0.45 7 H X 0.157 TAIL,30 GOLD;,, | 80009 | 131-3516-00 |
| | | | | *MOUNTING PARTS* | | |
| | 210-0001-00 | | | WASHER,LOCK:#2 INTL,0.013 THK,STL (QUANTITY 2) | 77900 | 1202-00-00-0541C |
| | 210-0405-00 | | | NUT,PLAIN,HEX:2-56 X 0.188,BRS CD PL (QUANTITY 2) | 73743 | 12157-50 |
| | 211-0062-00 | | | SCREW,MACHINE:2-56 X 0.312,PNH,STL (QUANTITY 2) | 06950 | ORDER BY DESCR |
| | | | | *END MOUNTING PARTS* | | |
| A11A3J120 | 131-3516-00 | | | CONN,DIN::PCB,;MALE,STR,3 X 50,0.1 CTR,0.45 7 H X 0.157 TAIL,30 GOLD;,, | 80009 | 131-3516-00 |
| | | | | *MOUNTING PARTS* | | |
| | 210-0001-00 | | | WASHER,LOCK:#2 INTL,0.013 THK,STL (QUANTITY 2) | 77900 | 1202-00-00-0541C |
| | 210-0405-00 | | | NUT,PLAIN,HEX:2-56 X 0.188,BRS CD PL (QUANTITY 2) | 73743 | 12157-50 |
| | 211-0062-00 | | | SCREW,MACHINE:2-56 X 0.312,PNH,STL (QUANTITY 2) | 06950 | ORDER BY DESCR |
| | | | | *END MOUNTING PARTS* | | |
| A11A3J130 | 131-3516-00 | | | CONN,DIN::PCB,;MALE,STR,3 X 50,0.1 CTR,0.45 7 H X 0.157 TAIL,30 GOLD;,, | 80009 | 131-3516-00 |
| | | | | *MOUNTING PARTS* | | |
| | 210-0001-00 | | | WASHER,LOCK:#2 INTL,0.013 THK,STL (QUANTITY 2) | 77900 | 1202-00-00-0541C |
| | 210-0405-00 | | | NUT,PLAIN,HEX:2-56 X 0.188,BRS CD PL (QUANTITY 2) | 73743 | 12157-50 |
| | 211-0062-00 | | | SCREW,MACHINE:2-56 X 0.312,PNH,STL (QUANTITY 2) | 06950 | ORDER BY DESCR |
| | | | | *END MOUNTING PARTS* | | |
| A11A3J140 | 131-3516-00 | | | CONN,DIN::PCB,;MALE,STR,3 X 50,0.1 CTR,0.45 7 H X 0.157 TAIL,30 GOLD;,, | 80009 | 131-3516-00 |
| | | | | *MOUNTING PARTS* | | |
| | 210-0001-00 | | | WASHER,LOCK:#2 INTL,0.013 THK,STL (QUANTITY 2) | 77900 | 1202-00-00-0541C |
| | 210-0405-00 | | | NUT,PLAIN,HEX:2-56 X 0.188,BRS CD PL (QUANTITY 2) | 73743 | 12157-50 |
| | 211-0062-00 | | | SCREW,MACHINE:2-56 X 0.312,PNH,STL (QUANTITY 2) | 06950 | ORDER BY DESCR |
| | | | | *END MOUNTING PARTS* | | |
| A11A3J150 | 131-3516-00 | | | CONN,DIN::PCB,;MALE,STR,3 X 50,0.1 CTR,0.45 7 H X 0.157 TAIL,30 GOLD;,, | 80009 | 131-3516-00 |
| | | | | *MOUNTING PARTS* | | |
| | 210-0001-00 | | | WASHER,LOCK:#2 INTL,0.013 THK,STL (QUANTITY 2) | 77900 | 1202-00-00-0541C |
| | 210-0405-00 | | | NUT,PLAIN,HEX:2-56 X 0.188,BRS CD PL (QUANTITY 2) | 73743 | 12157-50 |
| | 211-0062-00 | | | SCREW,MACHINE:2-56 X 0.312,PNH,STL (QUANTITY 2) | 06950 | ORDER BY DESCR |
| | | | | *END MOUNTING PARTS* | | |
| A11A3P160 | 131-3517-00 | | | CONN,DIN:PCB,;FEMALE,RTANG,3 X 50,0.1 CTR,0 .504 MLG X 0.118 TAIL,30 GOLD;,, | 80009 | 131-3517-00 |
| | | | | *MOUNTING PARTS* | | |
| | 210-0001-00 | | | WASHER,LOCK:#2 INTL,0.013 THK,STL (QUANTITY 2) | 77900 | 1202-00-00-0541C |
| | 210-0405-00 | | | NUT,PLAIN,HEX:2-56 X 0.188,BRS CD PL (QUANTITY 2) | 73743 | 12157-50 |
| | 211-0185-00 | | | SCREW,MACHINE:2-56 X 0.438,PNH,STL (QUANTITY 2) | TK0435 | ORDER BY DESCR |
| | | | | *END ATTACHED PARTS* | | |

| Component No. | Tektronix Part No. | Serial/Assembly No. Effective | Dscont | Name & Description | Mfr. Code | Mfr. Part No. |
|---|---|---|---|---|---|---|
| A14 | 657-0072-03 | | | MODULAR SUBASSY:W/TOUCH PANEL (STANDARD ONLY) | 80009 | 657-0072-03 |
| A14 | 657-0088-01 | | | MODULAR SUBASSY:W/TOUCH PANEL,WHITE PHOSPHOR (OPTION 74 ONLY) | 80009 | 657-0088-01 |

| Component No. | Tektronix Part No. | Serial/Assembly No. Effective | Dscont | Name & Description | Mfr. Code | Mfr. Part No. |
|---|---|---|---|---|---|---|
| A14A1 | 657-0072-02 | | | MODULAR SUBASSY:DISPLAY MODULE ASSY FOR VM700<br>(STANDARD ONLY) | 80009 | 657-0072-02 |
| A14A1 | 657-0088-00 | | | MODULAR SUBASSY:DISPLAY MODULE ASSY FOR VM700A<br>(OPTION 74 ONLY)<br>*ATTACHED PARTS* | 80009 | 657-0088-00 |
| | 108-1460-00 | | | COIL,RF:FXD,TRACE ROTATION,1200<br>DISPLAY MODULE:9 INCH MONOCHROME MONITOR HIGH RESOLUTION DISPLAY | 75498 | 128-8059-EA |
| | 210-0055-00 | | | WASHER,LOCK:#6 SPLIT,0.031 THK,STL<br>(QUANTITY 4) | 81350 | ORDER BY DESCR |
| | 211-0507-00 | | | SCREW,MACHINE:6-32 X 0.312,PNH,STL<br>(QUANTITY 4)<br>*END ATTACHED PARTS* | 83385 | ORDER BY DESCR |

| Component No. | Tektronix Part No. | Serial/Assembly No. Effective | Dscont | Name & Description | Mfr. Code | Mfr. Part No. |
|---|---|---|---|---|---|---|
| A14A1A1 | 671-1033-01 | | | CIRCUIT BD ASSY:TRP | 80009 | 671-1033-01 |

| Component No. | Tektronix Part No. | Serial/Assembly No. Effective | Dscont | Name & Description | Mfr. Code | Mfr. Part No. |
|---|---|---|---|---|---|---|
| A15 | 119-2630-01 | B022000 | | POWER SUPPLY:IN 115/230 47-63 HZ, OUT 5V 40 A, 15V 3A, -15V 3A,12V (REPLACEABLE AS ASSEMBLY ONLY) | TK2361 | 119-2630-01 |
| A15 | 119-4258-00 | B030000 | B031029 | POWER SUPPLY:IN 115/230 47-63HZ,OUT 5V 40A, 15V 3A,15V 3A,12V 2.5,-5.2V 2A,VAR FAN OUT 12-24V | 80009 | 119-4258-00 |
| A15 | 119-4258-01 | B031030 | B031213 | POWER SUPPLY:IN 115/230 47-63HZ,OUT 5V 40A, 15V 3A,12V 2.5,-5.2V 2A,VAR FAN OUT 12-24V | 80009 | 119-4258-01 |
| A15 | 119-4258-02 | B031214 | | POWER SUPPLY:IN 115/230 47-63HZ,OUT 5V 40A, 15V 3A,12V 2.5,-5.2V 2A,VAR FAN OUT 12-24V | 80009 | 119-4258-02 |
| | | | | *ATTACHED PARTS* | | |
| | 211-0510-00 | | | SCREW,MACHINE:6-32 X 0.375,PNH,STL (QUANTITY 7, BACK OF HEAT SINK) | 83385 | ORDER BY DESCR |
| | 211-0661-00 | | | SCR,ASSEM WSHR:4-40 X 0.25,PNH,STL,CD PL,PO Z,MACHINE (QUANTITY 10 TO MOUNT A15A1 TO PS CHASSIS) | 01536 | 821-01655-024 |
| | 426-0568-00 | | | FRAME,PUSH BTN: | 80009 | 426-0568-00 |
| | 441-1997-00 | 119-4258-00 | 119-4258-00 | CHAS,PWR SPLY:ALUMINUM | 80009 | 441-1997-00 |
| | 441-1997-01 | 119-4258-01 | | CHAS,PWR SPLY:ALUMINUM | 80009 | 441-1997-01 |
| | | | | *END ATTACHED PARTS* | | |
| A15F1 | 159-0342-00 | | | FUSE,CARTRIDGE:6 AMP,250V,SLOW BLOW,0.250 X 1.250,SAFETY CONTROLLED (FOR 90 - 132 VAC OPERATION) | 80009 | 159-0342-00 |
| A15F1 | 159-0005-00 | | | FUSE,CARTRIDGE:3AG,3A,250V,30SEC,CER (FOR 180 - 250 VAC OPOERATION) | 71400 | MSL-3 |
| | | | | *ATTACHED PARTS* | | |
| | 198-5786-00 | | | WIRE SET,ELEC:VM700A | 80009 | 198-5786-00 |
| | 200-0237-04 | | | COVER,FUHLR:PLASTIC | 80009 | 200-0237-04 |
| | 200-2264-00 | | | CAP,FUSEHOLDER:3AG FUSES | S3629 | FEK 031 1666 |
| | 204-0832-00 | | | BODY,FUSEHOLDER:3AG & 5 X 20MM FUSES | TK0861 | 031 1673 |
| | 210-0873-00 | | | WASHER,FLAT:0.5 ID X 0.688 OD X 0.047,RBR | 80009 | 210-0873-00 |
| | | | | *END ATTACHED PARTS* | | |

| Component No. | Tektronix Part No. | Serial/Assembly No. Effective | Dscont | Name & Description | Mfr. Code | Mfr. Part No. |
|---|---|---|---|---|---|---|
| A15A1 | ----- ----- | | | CIRCUIT BD ASSY:POWER SUPPLY<br>*ATTACHED PARTS* | | |
| | 211-0008-00 | | | SCREW,MACHINE:4-40 X 0.25,PNH,STL<br>(QUANTITY 3, BACK OF THRU HEAT SINK) | 93907 | ORDER BY DESCR |
| | 214-4453-00 | | | HEAT SINK:ALUMINUM<br>*END ATTACHED PARTS* | 80009 | 214-4453-00 |
| A15A1C1 | 285-1252-00 | | | CAP,FXD,PLASTIC:0.15UF,10%,250VAC | D5243 | F1772-415-2000 |
| A15A1C2 | 285-1252-00 | | | CAP,FXD,PLASTIC:0.15UF,10%,250VAC | D5243 | F1772-415-2000 |
| A15A1C3 | 290-1294-00 | | | CAP,FXD,ALUM:1000UF,20%,200V,40 X 35 MM;SNA P-IN TERM,105 DEG | 80009 | 290-1294-00 |
| A15A1C4 | 290-1294-00 | | | CAP,FXD,ALUM:1000UF,20%,200V,40 X 35 MM;SNA P-IN TERM,105 DEG | 80009 | 290-1294-00 |
| A15A1C5 | 283-0167-02 | | | CAP,FXD,CER DI:0.1UF,10%,100V,TAPED & REELE D,0.2 SPACING | 04222 | SR591C104KAAAP1 |
| A15A1C6 | 285-1196-00 | | | CAP,FXD,PPR DI:0.01UF,20%,250V | 80009 | 285-1196-00 |
| A15A1C7 | 285-1196-00 | | | CAP,FXD,PPR DI:0.01UF,20%,250V | 80009 | 285-1196-00 |
| A15A1C8 | 285-1196-00 | | | CAP,FXD,PPR DI:0.01UF,20%,250V | 80009 | 285-1196-00 |
| A15A1C9 | 285-1196-00 | | | CAP,FXD,PPR DI:0.01UF,20%,250V | 80009 | 285-1196-00 |
| A15A1C10 | 285-1336-00 | | | CAP,FXD,MTLZD:1.5UF,20%,400VDC | TK1573 | MKC4 1.5/400/20 |
| A15A1C11 | 290-0919-00 | | | CAP,FXD,ELCTLT:470UF,+50-20%,35V | 55680 | UVX1V471MPA |
| A15A1C16 | 290-0943-02 | | | CAP,FXD,ELCTLT:47UF,20%,25V | 55680 | UVX1E470MDA1TD |
| A15A1C23 | 285-1347-00 | | | CAP,FXD,MTLZD:2.2MFD,20%,250V | TK1573 | MKC4 2.2 20% 250 |
| A15A1C24 | 285-1347-00 | | | CAP,FXD,MTLZD:2.2MFD,20%,250V | TK1573 | MKC4 2.2 20% 250 |
| A15A1C25 | 281-0773-00 | | | CAP,FXD,CER DI:0.01UF,10%,100V | 80009 | 281-0773-00 |
| A15A1C26 | 290-0800-00 | | | CAP,FXD,ELCTLT:250UF,+100-10%,20V | 24165 | 672D257H020DM5C |
| A15A1C27 | 290-0800-00 | | | CAP,FXD,ELCTLT:250UF,+100-10%,20V | 24165 | 672D257H020DM5C |
| A15A1C28 | 290-0800-00 | | | CAP,FXD,ELCTLT:250UF,+100-10%,20V | 24165 | 672D257H020DM5C |
| A15A1C30 | 283-0486-00 | | | CAP,FXD,CER DI:1.0UF,10%,50V | 04222 | SR305C105KAA |
| A15A1C31 | 283-0486-00 | | | CAP,FXD,CER DI:1.0UF,10%,50V | 04222 | SR305C105KAA |
| A15A1C32 | 281-0812-00 | | | CAP,FXD,CER DI:1000PF,10%,100V | 04222 | SA101C102KAA |
| A15A1C33 | 290-0800-00 | | | CAP,FXD,ELCTLT:250UF,+100-10%,20V | 24165 | 672D257H020DM5C |
| A15A1C34 | 283-0486-00 | | | CAP,FXD,CER DI:1.0UF,10%,50V | 04222 | SR305C105KAA |
| A15A1C35 | 290-0800-00 | | | CAP,FXD,ELCTLT:250UF,+100-10%,20V | 24165 | 672D257H020DM5C |
| A15A1C36 | 283-0486-00 | | | CAP,FXD,CER DI:1.0UF,10%,50V | 04222 | SR305C105KAA |
| A15A1C37 | 283-0197-02 | | | CAP,FXD,CER DI:470PF,5%,50V | 04222 | SR591A471JAAAP1 |
| A15A1C38 | 283-0486-00 | | | CAP,FXD,CER DI:1.0UF,10%,50V | 04222 | SR305C105KAA |
| A15A1C39 | 283-0051-02 | | | CAP,FXD,CER DI:0.0033UF,5%,100V | 04222 | SR591A332JAAAP1 |
| A15A1C40 | 283-0167-02 | | | CAP,FXD,CER DI:0.1UF,10%,100V,TAPED & REELE D,0.2 SPACING | 04222 | SR591C104KAAAP1 |
| A15A1C41 | 290-0974-00 | | | CAP,FXD,ELCTLT:10UF,20%,50VDC | 55680 | UVX1H100MAA |
| A15A1C42 | 283-0065-00 | | | CAP,FXD,CER DI:0.001UF,5%,50V | 80009 | 283-0065-00 |
| A15A1C43 | 281-0773-00 | | | CAP,FXD,CER DI:0.01UF,10%,100V | 80009 | 281-0773-00 |
| A15A1C44 | 290-0943-02 | | | CAP,FXD,ELCTLT:47UF,20%,25V | 55680 | UVX1E470MDA1TD |
| A15A1C45 | 290-0778-00 | | | CAP,FXD,ELCTLT:1UF,20%,50V,NPLZD | 54473 | ECE-A50N1 |
| A15A1C46 | 290-0778-00 | | | CAP,FXD,ELCTLT:1UF,20%,50V,NPLZD | 54473 | ECE-A50N1 |
| A15A1C49 | 290-0800-00 | | | CAP,FXD,ELCTLT:250UF,+100-10%,20V | 24165 | 672D257H020DM5C |
| A15A1C51 | 290-0943-02 | | | CAP,FXD,ELCTLT:47UF,20%,25V | 55680 | UVX1E470MDA1TD |
| A15A1C52 | 281-0773-00 | | | CAP,FXD,CER DI:0.01UF,10%,100V | 80009 | 281-0773-00 |
| A15A1C53 | 281-0773-00 | | | CAP,FXD,CER DI:0.01UF,10%,100V | 80009 | 281-0773-00 |
| A15A1C54 | 290-0800-00 | | | CAP,FXD,ELCTLT:250UF,+100-10%,20V | 24165 | 672D257H020DM5C |
| A15A1C56 | 283-0486-00 | | | CAP,FXD,CER DI:1.0UF,10%,50V | 04222 | SR305C105KAA |
| A15A1C57 | 281-0812-00 | | | CAP,FXD,CER DI:1000PF,10%,100V | 04222 | SA101C102KAA |
| A15A1C58 | 283-0197-02 | | | CAP,FXD,CER DI:470PF,5%,50V | 04222 | SR591A471JAAAP1 |
| A15A1C59 | 283-0197-02 | | | CAP,FXD,CER DI:470PF,5%,50V | 04222 | SR591A471JAAAP1 |
| A15A1C60 | 290-0943-02 | | | CAP,FXD,ELCTLT:47UF,20%,25V | 55680 | UVX1E470MDA1TD |
| A15A1C61 | 290-0943-02 | | | CAP,FXD,ELCTLT:47UF,20%,25V | 55680 | UVX1E470MDA1TD |
| A15A1C62 | 290-0943-02 | | | CAP,FXD,ELCTLT:47UF,20%,25V | 55680 | UVX1E470MDA1TD |
| A15A1C64 | 281-0773-00 | | | CAP,FXD,CER DI:0.01UF,10%,100V | 80009 | 281-0773-00 |

| Component No. | Tektronix Part No. | Serial/Assembly No. Effective | Dscont | Name & Description | Mfr. Code | Mfr. Part No. |
|---|---|---|---|---|---|---|
| A15A1C74 | 283-0167-02 | | | CAP,FXD,CER DI:0.1UF,10%,100V,TAPED & REELE D,0.2 SPACING | 04222 | SR591C104KAAAP1 |
| A15A1C75 | 281-0773-00 | | | CAP,FXD,CER DI:0.01UF,10%,100V | 80009 | 281-0773-00 |
| A15A1C76 | 283-0051-02 | | | CAP,FXD,CER DI:0.0033UF,5%,100V | 04222 | SR591A332JAAAP1 |
| A15A1C81 | 283-0167-02 | | | CAP,FXD,CER DI:0.1UF,10%,100V,TAPED & REELE D,0.2 SPACING | 04222 | SR591C104KAAAP1 |
| A15A1C82 | 281-0773-00 | | | CAP,FXD,CER DI:0.01UF,10%,100V | 80009 | 281-0773-00 |
| A15A1C83 | 281-0773-00 | | | CAP,FXD,CER DI:0.01UF,10%,100V | 80009 | 281-0773-00 |
| A15A1C84 | 283-0167-02 | | | CAP,FXD,CER DI:0.1UF,10%,100V,TAPED & REELE D,0.2 SPACING | 04222 | SR591C104KAAAP1 |
| A15A1C85 | 290-0974-00 | | | CAP,FXD,ELCTLT:10UF,20%,50VDC | 55680 | UVX1H100MAA |
| A15A1C86 | 290-0973-00 | | | CAP,FXD,ELCTLT:100UF,20%,25VDC | 24165 | 513D107M025BB4D |
| A15A1C87 | 290-0943-02 | | | CAP,FXD,ELCTLT:47UF,20%,25V | 55680 | UVX1E470MDA1TD |
| A15A1C88 | 283-0239-00 | | | CAP,FXD,CER DI:0.022UF,10%,50V | 80009 | 283-0239-00 |
| A15A1C89 | 283-0051-02 | | | CAP,FXD,CER DI:0.0033UF,5%,100V | 04222 | SR591A332JAAAP1 |
| A15A1C90 | 283-0197-02 | | | CAP,FXD,CER DI:470PF,5%,50V | 04222 | SR591A471JAAAP1 |
| A15A1C91 | 290-0798-00 | | | CAP,FXD,ELCTLT:180UF,+100-10%,40V | 24165 | 672D187H040DM5C |
| A15A1C92 | 281-0773-00 | | | CAP,FXD,CER DI:0.01UF,10%,100V | 80009 | 281-0773-00 |
| A15A1C125 | 283-0486-00 | | | CAP,FXD,CER DI:1.0UF,10%,50V | 04222 | SR305C105KAA |
| A15A1C147 | 283-0024-02 | | | CAP,FXD,CER DI:0.1UF,+80-20%,50V | 04222 | SR215E104ZAATR |
| A15A1C150 | 281-0773-00 | | | CAP,FXD,CER DI:0.01UF,10%,100V | 80009 | 281-0773-00 |
| A15A1C151 | 283-0486-00 | | | CAP,FXD,CER DI:1.0UF,10%,50V | 04222 | SR305C105KAA |
| A15A1C157 | 283-0198-00 | | | CAP,FXD,CER DI:0.22UF,20%,50V | 05397 | C330C224M5U1CA |
| A15A1C157 | 283-0198-00 | 119-4258-01 | | CAP,FXD,CER DI:0.22UF,20%,50V | 05397 | C330C224M5U1CA |
| A15A1C158 | 283-0198-00 | | | CAP,FXD,CER DI:0.22UF,20%,50V | 05397 | C330C224M5U1CA |
| A15A1C185 | 290-0974-00 | | | CAP,FXD,ELCTLT:10UF,20%,50VDC | 55680 | UVX1H100MAA |
| A15A1C201 | 283-0167-02 | | | CAP,FXD,CER DI:0.1UF,10%,100V,TAPED & REELE D,0.2 SPACING | 04222 | SR591C104KAAAP1 |
| A15A1C290 | 285-1381-00 | 119-4258-01 | | CAP,FXD,MTLZD:1500PF,10%,250V | 80009 | 285-1381-00 |
| A15A1C291 | 285-1381-00 | 119-4258-01 | | CAP,FXD,MTLZD:1500PF,10%,250V | 80009 | 285-1381-00 |
| A15A1C292 | 285-1196-00 | | | CAP,FXD,PPR DI:0.01UF,20%,250V | 80009 | 285-1196-00 |
| A15A1C293 | 285-1196-00 | | | CAP,FXD,PPR DI:0.01UF,20%,250V | 80009 | 285-1196-00 |
| A15A1C420 | 283-0238-00 | | | CAP,FXD,CER DI:0.01UF,10%,50V | 80009 | 283-0238-00 |
| A15A1C470 | 283-0213-00 | | | CAP,FXD,CER DI:300PF,5%,100V | 80009 | 283-0213-00 |
| A15A1C570 | 283-0486-00 | | | CAP,FXD,CER DI:1.0UF,10%,50V | 04222 | SR305C105KAA |
| A15A1C640 | 283-0197-02 | | | CAP,FXD,CER DI:470PF,5%,50V | 04222 | SR591A471JAAAP1 |
| A15A1C900 | 283-0486-00 | | | CAP,FXD,CER DI:1.0UF,10%,50V | 04222 | SR305C105KAA |
| A15A1CR1 | 152-0750-00 | | | DIODE,RECT:,FAST RCVRY;BRIDGE,600V,3A,IFSM= 125A,250NS,SAFETY CONTROLLED;RKBPC606 | 80009 | 152-0750-00 |
| | | | | *MOUNTING PARTS* | | |
| | 210-0586-00 | | | NUT,PL,ASSEM WA:4-40 X 0.25,STL CD PL | 78189 | 211-041800-00 |
| | 211-0014-00 | | | SCREW,MACHINE:4-40 X 0.5,PNH,STL | 93907 | ORDER BY DESCR |
| | 214-1914-00 | | | HEAT SINK,DIODE:(2)0.15 DIA HOLES,AL | 98978 | PB1-2CB |
| | | | | *END MOUNTING PARTS* | | |
| A15A1CR2 | 152-0601-01 | | | SEMICOND DVC,DI:RECTIFIER,SI,150V,1A,35NS | 04713 | MUR115RL |
| A15A1CR3 | 152-0601-01 | | | SEMICOND DVC,DI:RECTIFIER,SI,150V,1A,35NS | 04713 | MUR115RL |
| A15A1CR4 | 152-0601-01 | | | SEMICOND DVC,DI:RECTIFIER,SI,150V,1A,35NS | 04713 | MUR115RL |
| A15A1CR5 | 152-0601-01 | | | SEMICOND DVC,DI:RECTIFIER,SI,150V,1A,35NS | 04713 | MUR115RL |
| A15A1CR6 | 152-0141-02 | | | DIODE,SIG:,ULTRA FAST;40V,150MA,4NS,2PF;1N4 152,DO-35,T&R | 80009 | 152-0141-02 |
| A15A1CR7 | 152-0141-02 | | | DIODE,SIG:,ULTRA FAST;40V,150MA,4NS,2PF;1N4 152,DO-35,T&R | 80009 | 152-0141-02 |
| A15A1CR9 | 152-0839-00 | | | DIODE,RECT:,FAST RCVRY;500V,8A,50NS;MUR850, TO-220 | 80009 | 152-0839-00 |
| | | | | *ATTACHED PARTS* | | |
| | 214-2518-01 | | | HEAT SINK,XSTR:TO-202/TO-220,AL | TK0303 | 332-012 |
| | | | | *END ATTACHED PARTS* | | |
| A15A1CR10 | 152-0581-04 | | | SEMICOND DVC,DI:RECT,SI,20V,1A,A59 | 04713 | 1N5817RL |
| A15A1CR12 | 152-0581-04 | | | SEMICOND DVC,DI:RECT,SI,20V,1A,A59 | 04713 | 1N5817RL |

| Component No. | Tektronix Part No. | Serial/Assembly No. Effective | Dscont | Name & Description | Mfr. Code | Mfr. Part No. |
|---|---|---|---|---|---|---|
| A15A1CR14 | 152-1170-00 | | | DIODE,RECT:,SCHTKY;DUAL,40V,40A,COM-CATH;40 CPQ040,TO-247 | 80009 | 152-1170-00 |
| | | | | *MOUNTING PARTS* | | |
| | 211-0511-00 | | | SCREW,MACHINE:6-32 X 0.5,PNH,STL | TK0435 | ORDER BY DESCR |
| | 342-0354-00 | | | INSULATOR,PLATE:TRANSISTOR | 55285 | 7403-09FR-52 |
| | | | | *END MOUNTING PARTS* | | |
| A15A1CR15 | 152-0884-00 | | | SEMICOND DVC,DI:16 AMP,35V,TO-220,AC PKG | 04713 | MBR1635 |
| | | | | *MOUNTING PARTS* | | |
| | 210-1178-00 | | | WASHER,SHLDR: | 80009 | 210-1178-00 |
| | 211-0012-00 | | | SCREW,MACHINE:4-40 X 0.375,PNH,STL | 93907 | ORDER BY DESCR |
| | 342-0563-00 | | | INSULATOR,PLATE:TRANSISTOR,FIBERGLASS REINF ORCED SILICON RUBBER | 18565 | 69-11-8805-1674 |
| | | | | *END MOUNTING PARTS* | | |
| A15A1CR16 | 152-0884-00 | | | SEMICOND DVC,DI:16 AMP,35V,TO-220,AC PKG | 04713 | MBR1635 |
| | | | | *MOUNTING PARTS* | | |
| | 210-1178-00 | | | WASHER,SHLDR: | 80009 | 210-1178-00 |
| | 211-0012-00 | | | SCREW,MACHINE:4-40 X 0.375,PNH,STL | 93907 | ORDER BY DESCR |
| | 342-0563-00 | | | INSULATOR,PLATE:TRANSISTOR,FIBERGLASS REINF ORCED SILICON RUBBER | 18565 | 69-11-8805-1674 |
| | | | | *END MOUNTING PARTS* | | |
| A15A1CR17 | 152-0141-02 | | | DIODE,SIG:,ULTRA FAST;40V,150MA,4NS,2PF;1N4 152,DO-35,T&R | 80009 | 152-0141-02 |
| A15A1CR22 | 152-0581-04 | | | SEMICOND DVC,DI:RECT,SI,20V,1A,A59 | 04713 | 1N5817RL |
| A15A1CR26 | 152-0581-04 | | | SEMICOND DVC,DI:RECT,SI,20V,1A,A59 | 04713 | 1N5817RL |
| A15A1CR27 | 152-0141-02 | | | DIODE,SIG:,ULTRA FAST;40V,150MA,4NS,2PF;1N4 152,DO-35,T&R | 80009 | 152-0141-02 |
| A15A1CR28 | 152-0141-02 | | | DIODE,SIG:,ULTRA FAST;40V,150MA,4NS,2PF;1N4 152,DO-35,T&R | 80009 | 152-0141-02 |
| A15A1CR29 | 152-0141-02 | | | DIODE,SIG:,ULTRA FAST;40V,150MA,4NS,2PF;1N4 152,DO-35,T&R | 80009 | 152-0141-02 |
| A15A1CR30 | 152-0141-02 | | | DIODE,SIG:,ULTRA FAST;40V,150MA,4NS,2PF;1N4 152,DO-35,T&R | 80009 | 152-0141-02 |
| A15A1CR31 | 152-0141-02 | | | DIODE,SIG:,ULTRA FAST;40V,150MA,4NS,2PF;1N4 152,DO-35,T&R | 80009 | 152-0141-02 |
| A15A1CR32 | 152-0141-02 | | | DIODE,SIG:,ULTRA FAST;40V,150MA,4NS,2PF;1N4 152,DO-35,T&R | 80009 | 152-0141-02 |
| A15A1CR33 | 152-0539-00 | | | DIODE,RECT:,ULTRA FAST;150V,8A,50NS,COM-CAT H;MUR1615CT,TO-220 | 04713 | MUR1615CT |
| | | | | *MOUNTING PARTS* | | |
| | 210-1178-00 | | | WASHER,SHLDR: | 80009 | 210-1178-00 |
| | 211-0012-00 | | | SCREW,MACHINE:4-40 X 0.375,PNH,STL | 93907 | ORDER BY DESCR |
| | 342-0563-00 | | | INSULATOR,PLATE:TRANSISTOR,FIBERGLASS REINF ORCED SILICON RUBBER | 18565 | 69-11-8805-1674 |
| | | | | *END MOUNTING PARTS* | | |
| A15A1CR35 | 152-0754-00 | | | DIODE,RECT:SCHTKY,;40V,8A,380A IFSM,AXIAL L EAD;80SQ040,DO-204AR | 80009 | 152-0754-00 |
| A15A1CR36 | 152-0754-00 | | | DIODE,RECT:SCHTKY,;40V,8A,380A IFSM,AXIAL L EAD;80SQ040,DO-204AR | 80009 | 152-0754-00 |
| A15A1CR37 | 152-0754-00 | | | DIODE,RECT:SCHTKY,;40V,8A,380A IFSM,AXIAL L EAD;80SQ040,DO-204AR | 80009 | 152-0754-00 |
| A15A1CR38 | 152-0754-00 | | | DIODE,RECT:SCHTKY,;40V,8A,380A IFSM,AXIAL L EAD;80SQ040,DO-204AR | 80009 | 152-0754-00 |
| A15A1CR46 | 152-0141-02 | | | DIODE,SIG:,ULTRA FAST;40V,150MA,4NS,2PF;1N4 152,DO-35,T&R | 80009 | 152-0141-02 |
| A15A1CR47 | 152-0141-02 | | | DIODE,SIG:,ULTRA FAST;40V,150MA,4NS,2PF;1N4 152,DO-35,T&R | 80009 | 152-0141-02 |
| A15A1CR48 | 152-0141-02 | | | DIODE,SIG:,ULTRA FAST;40V,150MA,4NS,2PF;1N4 152,DO-35,T&R | 80009 | 152-0141-02 |
| A15A1CR49 | 152-0141-02 | | | DIODE,SIG:,ULTRA FAST;40V,150MA,4NS,2PF;1N4 152,DO-35,T&R | 80009 | 152-0141-02 |

| Component No. | Tektronix Part No. | Serial/Assembly No. Effective | Dscont | Name & Description | Mfr. Code | Mfr. Part No. |
|---|---|---|---|---|---|---|
| A15A1CR50 | 152-0141-02 | | | DIODE,SIG:,ULTRA FAST;40V,150MA,4NS,2PF;1N4152,DO-35,T&R | 80009 | 152-0141-02 |
| A15A1CR51 | 152-0141-02 | | | DIODE,SIG:,ULTRA FAST;40V,150MA,4NS,2PF;1N4152,DO-35,T&R | 80009 | 152-0141-02 |
| A15A1CR52 | 152-0141-02 | | | DIODE,SIG:,ULTRA FAST;40V,150MA,4NS,2PF;1N4152,DO-35,T&R | 80009 | 152-0141-02 |
| A15A1CR53 | 152-0141-02 | | | DIODE,SIG:,ULTRA FAST;40V,150MA,4NS,2PF;1N4152,DO-35,T&R | 80009 | 152-0141-02 |
| A15A1CR56 | 152-0601-01 | | | SEMICOND DVC,DI:RECTIFIER,SI,150V,1A,35NS | 04713 | MUR115RL |
| A15A1CR84 | 152-0141-02 | | | DIODE,SIG:,ULTRA FAST;40V,150MA,4NS,2PF;1N4152,DO-35,T&R | 80009 | 152-0141-02 |
| A15A1CR88 | 152-0141-02 | | | DIODE,SIG:,ULTRA FAST;40V,150MA,4NS,2PF;1N4152,DO-35,T&R | 80009 | 152-0141-02 |
| A15A1CR89 | 152-0141-02 | | | DIODE,SIG:,ULTRA FAST;40V,150MA,4NS,2PF;1N4152,DO-35,T&R | 80009 | 152-0141-02 |
| A15A1CR151 | 152-0141-02 | | | DIODE,SIG:,ULTRA FAST;40V,150MA,4NS,2PF;1N4152,DO-35,T&R | 80009 | 152-0141-02 |
| A15A1CR201 | 152-0141-02 | | | DIODE,SIG:,ULTRA FAST;40V,150MA,4NS,2PF;1N4152,DO-35,T&R | 80009 | 152-0141-02 |
| A15A1CR202 | 152-0670-00 | | | DIODE,RECT:SCHTKY,;40V,3A,IFSM=80A,VF=525MV AT 3A,IR=2.0MA AT 40V,AXIAL LEAD;1N5822 | 80009 | 152-0670-00 |
| A15A1CR258 | 152-0141-02 | | | DIODE,SIG:,ULTRA FAST;40V,150MA,4NS,2PF;1N4152,DO-35,T&R | 80009 | 152-0141-02 |
| A15A1CR259 | 152-0141-02 | | | DIODE,SIG:,ULTRA FAST;40V,150MA,4NS,2PF;1N4152,DO-35,T&R | 80009 | 152-0141-02 |
| A15A1CR260 | 152-0141-02 | | | DIODE,SIG:,ULTRA FAST;40V,150MA,4NS,2PF;1N4152,DO-35,T&R | 80009 | 152-0141-02 |
| A15A1CR261 | 152-0141-02 | | | DIODE,SIG:,ULTRA FAST;40V,150MA,4NS,2PF;1N4152,DO-35,T&R | 80009 | 152-0141-02 |
| A15A1CR262 | 152-0141-02 | | | DIODE,SIG:,ULTRA FAST;40V,150MA,4NS,2PF;1N4152,DO-35,T&R | 80009 | 152-0141-02 |
| A15A1CR640 | 152-0141-02 | | | DIODE,SIG:,ULTRA FAST;40V,150MA,4NS,2PF;1N4152,DO-35,T&R | 80009 | 152-0141-02 |
| A15A1CR651 | 152-0141-02 | 119-4258-00 | 119-4258-00 | DIODE,SIG:,ULTRA FAST;40V,150MA,4NS,2PF;1N4152,DO-35,T&R | 80009 | 152-0141-02 |
| A15A1DS1 | 150-0030-00 | | | LAMP,GLOW:60-90V MAX,0.6MA,A28-T,WIRE LEADS | 58224 | A2B-T |
| A15A1DS2 | 150-1119-00 | | | DIODE,OPTO:,LED;GREEN,562NM,2MCD AT 20MA,T1 W/SPEC SPACER LENGTH; | 15513 | SP830928-2 |
| A15A1DS3 | 150-1119-00 | | | DIODE,OPTO:,LED;GREEN,562NM,2MCD AT 20MA,T1 W/SPEC SPACER LENGTH; | 15513 | SP830928-2 |
| A15A1DS4 | 150-1119-00 | | | DIODE,OPTO:,LED;GREEN,562NM,2MCD AT 20MA,T1 W/SPEC SPACER LENGTH; | 15513 | SP830928-2 |
| A15A1DS5 | 150-1119-00 | | | DIODE,OPTO:,LED;GREEN,562NM,2MCD AT 20MA,T1 W/SPEC SPACER LENGTH; | 15513 | SP830928-2 |
| A15A1DS6 | 150-1119-00 | | | DIODE,OPTO:,LED;GREEN,562NM,2MCD AT 20MA,T1 W/SPEC SPACER LENGTH; | 15513 | SP830928-2 |
| A15A1DS7 | 150-1118-00 | | | DIODE,OPTO:,LED;RED,635NM,6MCD AT 20MA,T1 W/SPEC SPACER LENGTH; | 15513 | SP830928-1 |
| A15A1DS8 | 150-1118-00 | | | DIODE,OPTO:,LED;RED,635NM,6MCD AT 20MA,T1 W/SPEC SPACER LENGTH; | 15513 | SP830928-1 |
| A15A1DS9 | 150-1118-00 | | | DIODE,OPTO:,LED;RED,635NM,6MCD AT 20MA,T1 W/SPEC SPACER LENGTH; | 15513 | SP830928-1 |
| A15A1DS10 | 150-1118-00 | | | DIODE,OPTO:,LED;RED,635NM,6MCD AT 20MA,T1 W/SPEC SPACER LENGTH; | 15513 | SP830928-1 |
| A15A1DS11 | 150-1119-00 | | | DIODE,OPTO:,LED;GREEN,562NM,2MCD AT 20MA,T1 W/SPEC SPACER LENGTH; | 15513 | SP830928-2 |
| A15A1E3 | 119-0181-00 | | | ARSR,ELEC SURGE:230,GAS FILLED,+/-15% | 25088 | B1-A230T |
| A15A1F3 | 307-1593-00 | | | RES,THERMAL: | 80009 | 307-1593-00 |
| A15A1F4 | 307-1593-00 | | | RES,THERMAL: | 80009 | 307-1593-00 |

| Component No. | Tektronix Part No. | Serial/Assembly No. Effective | Dscont | Name & Description | Mfr. Code | Mfr. Part No. |
|---|---|---|---|---|---|---|
| A15A1FL1 | 119-4353-00 | | | FILTER,RFI:6A,250V,50/60HZ,FLANGE MOUNT,RTANGLE PC TERMINALS | 80009 | 119-4353-00 |
| | | | | *MOUNTING PARTS* | | |
| | 210-0586-00 | | | NUT,PL,ASSEM WA:4-40 X 0.25,STL CD PL (QUANTITY 2, ATTACH TO CHASSIS) | 78189 | 211-041800-00 |
| | 211-0012-00 | | | SCREW,MACHINE:4-40 X 0.375,PNH,STL (QUANTITY 2, ATTACH TO CHASSIS) | 93907 | ORDER BY DESCR |
| | | | | *END MOUNTING PARTS* | | |
| A15A1J1 | 131-4885-00 | | | CONN,HDR: | 80009 | 131-4885-00 |
| A15A1J2 | 131-2993-00 | | | CONN,HDR PWR:PCB,;MALE,RTANG,1 X 10,0.156 CTR,0.450 MLG X 0.172 TAIL,PLZ WALL,20 GOLD;,, | 27264 | ORDER BY DESCR |
| A15A1J3 | 131-4036-00 | | | CONN,HDR PWR::PCB,;MALE,RTANG,1 X 2,0.156 CTR,0.450 MLG X 0.172 TAIL,PLZ WALL,20 GOLD;,, | 27264 | 26-48-2024 |
| A15A1J4 | 129-1402-00 | | | SPACER,POST:0.125 SPACING,10-32 INT THREAD, SWAGE MOUNT,0.375 OD,STEEL,TIN PLATE (QUANTITY 4) | 80009 | 129-1402-00 |
| | | | | *MOUNTING PARTS* | | |
| | 212-0518-00 | | | SCREW,MACHINE:10-32 X 0.312,PNH,STL (QUANTITY 4) | 93907 | ORDER BY DESCR |
| | | | | *END MOUNTING PARTS* | | |
| A15A1J5 | 131-1425-00 | | | CONN,HDR:PCB,;MALE,RTANG,1 X 36,0.1 CTR,0.230 MLG X 0.090 TAIL,30 GOLD,STACKABLE;,, | 22526 | 65521-136 |
| A15A1J7 | 131-5444-00 | | | CONN,HDR PWR:PCB,;MALE,STR,1 X 2,0.200 CTR, 0.420 MLG C 0.142 TAIL,W/FRICTION LOCK,TIN;,, | 80009 | 131-5444-00 |
| A15A1J10 | 131-0608-00 | | | TERMINAL,PIN:0.365 L X 0.025 BRZ GLD PL (QUANTITY 2) | 80009 | 131-0608-00 |
| A15A1J12 | 131-0608-00 | | | TERMINAL,PIN:0.365 L X 0.025 BRZ GLD PL (QUANTITY 2) | 80009 | 131-0608-00 |
| A15A1J13 | 131-0608-00 | | | TERMINAL,PIN:0.365 L X 0.025 BRZ GLD PL (QUANTITY 2) | 80009 | 131-0608-00 |
| A15A1L2 | 120-1654-00 | | | TRANSFORMER,PWR:8MH,1.5A,COMMON MODE | TK1601 | 62911-003 |
| A15A1L3 | 108-1519-00 | | | COIL,RF: | 80009 | 108-1519-00 |
| A15A1L4 | 108-1289-00 | | | COIL,PWR: | TK1345 | Z-1289 |
| A15A1L5 | 108-1289-00 | | | COIL,PWR: | TK1345 | Z-1289 |
| A15A1L6 | 108-0554-00 | | | COIL,RF:FIXED,5UH,+/-20% | TK1345 | 108-0554-00 |
| A15A1L8 | 108-0958-00 | | | COIL,RF: | 80009 | 108-0958-00 |
| A15A1L10 | 108-0958-00 | | | COIL,RF: | 80009 | 108-0958-00 |
| A15A1L12 | 108-0958-00 | | | COIL,RF: | 80009 | 108-0958-00 |
| A15A1L13 | 108-0422-00 | | | COIL,RF:FIXED,80UH | 80009 | 108-0422-00 |
| A15A1P10 | 131-0993-00 | | | CONN,BOX:SHUNT/SHORTING,;FEMALE,STR,1 X 2,0.1 CTR,0.385 H,30 GOLD,BLACK,JUMPER; | 22526 | 65474-006 |
| A15A1P12 | 131-0993-00 | | | CONN,BOX:SHUNT/SHORTING,;FEMALE,STR,1 X 2,0.1 CTR,0.385 H,30 GOLD,BLACK,JUMPER; | 22526 | 65474-006 |
| A15A1P13 | 131-0993-00 | | | CONN,BOX:SHUNT/SHORTING,;FEMALE,STR,1 X 2,0.1 CTR,0.385 H,30 GOLD,BLACK,JUMPER; | 22526 | 65474-006 |
| A15A1Q2 | 151-1282-00 | | | TRANSISTOR,PWR:MOS,N-CH;500V,9.0A,0.4 OHM;MTG9N50E,TO-218 FULLY ISOLATED | 80009 | 151-1282-00 |
| | | | | *MOUNTING PARTS* | | |
| | 211-0578-00 | | | SCREW,MACHINE:6-32 X 0.438,PNH,STL | 93907 | ORDER BY DESCR |
| | 342-0927-00 | | | PAD,CNDCT,XSTR:GRAPHITE FOIL,TO-218/TO3P/TO-24,THM GRAFOIL G4 | 80009 | 342-0927-00 |
| | | | | *END MOUNTING PARTS* | | |
| A15A1Q3 | 151-1282-00 | | | TRANSISTOR,PWR:MOS,N-CH;500V,9.0A,0.4 OHM;MTG9N50E,TO-218 FULLY ISOLATED | 80009 | 151-1282-00 |
| | | | | *MOUNTING PARTS* | | |
| | 211-0578-00 | | | SCREW,MACHINE:6-32 X 0.438,PNH,STL | 93907 | ORDER BY DESCR |
| | 342-0927-00 | | | PAD,CNDCT,XSTR:GRAPHITE FOIL,TO-218/TO3P/TO-24,THM GRAFOIL G4 | 80009 | 342-0927-00 |
| | | | | *END MOUNTING PARTS* | | |

| Component No. | Tektronix Part No. | Serial/Assembly No. Effective | Dscont | Name & Description | Mfr. Code | Mfr. Part No. |
|---|---|---|---|---|---|---|
| A15A1Q8 | 151-1282-00 | | | TRANSISTOR,PWR:MOS,N-CH;500V,9.0A,0.4 OHM;MTG9N50E,TO-218 FULLY ISOLATED | 80009 | 151-1282-00 |
| | | | | *MOUNTING PARTS* | | |
| | 211-0578-00 | | | SCREW,MACHINE:6-32 X 0.438,PNH,STL | 93907 | ORDER BY DESCR |
| | 342-0927-00 | | | PAD,CNDCT,XSTR:GRAPHITE FOIL,TO-218/TO3P/TO-24,THM GRAFOIL G4 | 80009 | 342-0927-00 |
| | | | | *END MOUNTING PARTS* | | |
| A15A1Q10 | 151-1282-00 | | | TRANSISTOR,PWR:MOS,N-CH;500V,9.0A,0.4 OHM;MTG9N50E,TO-218 FULLY ISOLATED | 80009 | 151-1282-00 |
| | | | | *MOUNTING PARTS* | | |
| | 211-0578-00 | | | SCREW,MACHINE:6-32 X 0.438,PNH,STL | 93907 | ORDER BY DESCR |
| | 342-0927-00 | | | PAD,CNDCT,XSTR:GRAPHITE FOIL,TO-218/TO3P/TO-24,THM GRAFOIL G4 | 80009 | 342-0927-00 |
| | | | | *END MOUNTING PARTS* | | |
| A15A1Q11 | 151-0188-00 | | | TRANSISTOR,SIG:BIPOLAR,PNP;40V,200MA,250MHZ,AMPLIFIER;2N3906,TO-92 EBC | 80009 | 151-0188-00 |
| A15A1Q12 | 151-0188-00 | | | TRANSISTOR,SIG:BIPOLAR,PNP;40V,200MA,250MHZ,AMPLIFIER;2N3906,TO-92 EBC | 80009 | 151-0188-00 |
| A15A1Q13 | 151-0190-00 | | | TRANSISTOR,SIG:BIPOLAR,NPN;40V,200MA,300MHZ,AMPLIFIER;2N3904,TO-92 EBC | 80009 | 151-0190-00 |
| A15A1Q16 | 151-1253-00 | | | TRANSISTOR,PWR:MOS,P-CH;60V,12A,0.3 OHM;IRF9531,TO-220 | 80009 | 151-1253-00 |
| | | | | *MOUNTING PARTS* | | |
| | 210-0586-00 | | | NUT,PL,ASSEM WA:4-40 X 0.25,STL CD PL | 78189 | 211-041800-00 |
| | 210-1178-00 | | | WASHER,SHLDR: | 80009 | 210-1178-00 |
| | 214-4516-00 | | | HEAT SINK,TRANS:TRANSISTOR,TO-220/TO-218;ALUMINUM,BLACK ANODIZE,(2) | 80009 | 214-4516-00 |
| | 342-0563-00 | | | INSULATOR,PLATE:TRANSISTOR,FIBERGLASS REINFORCED SILICON RUBBER | 18565 | 69-11-8805-1674 |
| | | | | *END MOUNTING PARTS* | | |
| A15A1Q17 | 151-1253-00 | | | TRANSISTOR,PWR:MOS,P-CH;60V,12A,0.3 OHM;IRF9531,TO-220 | 80009 | 151-1253-00 |
| | | | | *MOUNTING PARTS* | | |
| | 210-0586-00 | | | NUT,PL,ASSEM WA:4-40 X 0.25,STL CD PL | 78189 | 211-041800-00 |
| | 210-1178-00 | | | WASHER,SHLDR: | 80009 | 210-1178-00 |
| | 214-1815-00 | | | HEAT SINK,XSTR:TO-220,ALUMINUM | 13103 | 6234B-MT |
| | 342-0563-00 | | | INSULATOR,PLATE:TRANSISTOR,FIBERGLASS REINFORCED SILICON RUBBER | 18565 | 69-11-8805-1674 |
| | | | | *END MOUNTING PARTS* | | |
| A15A1Q18 | 151-0188-00 | | | TRANSISTOR,SIG:BIPOLAR,PNP;40V,200MA,250MHZ,AMPLIFIER;2N3906,TO-92 EBC | 80009 | 151-0188-00 |
| A15A1Q19 | 151-1171-00 | | | TRANSISTOR,PWR:MOS,N-CH;50V,12A,0.12 OHM;BUZ71A/IRFZ22/MTP15N05E,TO-220 | 80009 | 151-1171-00 |
| | | | | *MOUNTING PARTS* | | |
| | 210-0586-00 | | | NUT,PL,ASSEM WA:4-40 X 0.25,STL CD PL | 78189 | 211-041800-00 |
| | 210-1178-00 | | | WASHER,SHLDR: | 80009 | 210-1178-00 |
| | 214-1815-00 | | | HEAT SINK,XSTR:TO-220,ALUMINUM | 13103 | 6234B-MT |
| | 342-0563-00 | | | INSULATOR,PLATE:TRANSISTOR,FIBERGLASS REINFORCED SILICON RUBBER | 18565 | 69-11-8805-1674 |
| | | | | *END MOUNTING PARTS* | | |
| A15A1Q20 | 151-0190-00 | | | TRANSISTOR,SIG:BIPOLAR,NPN;40V,200MA,300MHZ,AMPLIFIER;2N3904,TO-92 EBC | 80009 | 151-0190-00 |
| A15A1Q23 | 151-0188-00 | | | TRANSISTOR,SIG:BIPOLAR,PNP;40V,200MA,250MHZ,AMPLIFIER;2N3906,TO-92 EBC | 80009 | 151-0188-00 |
| A15A1Q24 | 151-1171-00 | | | TRANSISTOR,PWR:MOS,N-CH;50V,12A,0.12 OHM;BUZ71A/IRFZ22/MTP15N05E,TO-220 | 80009 | 151-1171-00 |
| A15A1Q25 | 151-0503-00 | | | THYRISTOR,PWR:BIPOLAR,SCR;30V,800MA RMS;2N5060,TO-92 KGA | 80009 | 151-0503-00 |
| A15A1Q26 | 151-0503-00 | | | THYRISTOR,PWR:BIPOLAR,SCR;30V,800MA RMS;2N5060,TO-92 KGA | 80009 | 151-0503-00 |
| A15A1Q27 | 151-0190-00 | | | TRANSISTOR,SIG:BIPOLAR,NPN;40V,200MA,300MHZ,AMPLIFIER;2N3904,TO-92 EBC | 80009 | 151-0190-00 |

| Component No. | Tektronix Part No. | Serial/Assembly No. Effective | Dscont | Name & Description | Mfr. Code | Mfr. Part No. |
|---|---|---|---|---|---|---|
| A15A1Q130 | 151-0528-00 | | | THYRISTOR,PWR:BIPOLAR,SCR;50V,16A RMS,PHASE CONTROL;2N6400,TO-220 | 80009 | 151-0528-00 |
| A15A1Q560 | 151-0188-00 | | | TRANSISTOR,SIG:BIPOLAR,PNP;40V,200MA,250MHZ ,AMPLIFIER;2N3906,TO-92 EBC | 80009 | 151-0188-00 |
| A15A1R1 | 301-0105-00 | | | RES,FXD,FILM:1M OHM,5%,0.50W | 19701 | 5053CX1M000J |
| A15A1R2 | 315-0100-02 | | | RES,FXD,CMPSN:10 OHM,5%,0.25W | 80009 | 315-0100-02 |
| A15A1R5 | 305-0104-00 | | | RES,FXD,CMPSN:100K OHM,5%,2W | 80009 | 305-0104-00 |
| A15A1R6 | 315-0106-00 | | | RES,FXD,FILM:10M OHM,5%,0.25W | 01121 | CB1065 |
| A15A1R8 | 315-0103-03 | | | RES,FXD,CMPSN:10K OHM,5%,0.25W | 80009 | 315-0103-03 |
| A15A1R9 | 315-0103-03 | | | RES,FXD,CMPSN:10K OHM,5%,0.25W | 80009 | 315-0103-03 |
| A15A1R18 | 322-3265-00 | | | RES,FXD:METAL FILM;5.62K OHM,1%,0.2W,TC=100 PPM;AXIAL,T&R,SMALL BODY | 80009 | 322-3265-00 |
| A15A1R20 | 315-0270-01 | | | RES,FXD,CMPSN:27 OHM,5%,0.25W | 80009 | 315-0270-01 |
| A15A1R21 | 315-0270-01 | | | RES,FXD,CMPSN:27 OHM,5%,0.25W | 80009 | 315-0270-01 |
| A15A1R22 | 301-0101-03 | | | RES,FXD,CMPSN:100 OHM,5%,0.5W | 80009 | 301-0101-03 |
| A15A1R23 | 301-0101-03 | | | RES,FXD,CMPSN:100 OHM,5%,0.5W | 80009 | 301-0101-03 |
| A15A1R27 | 308-0875-00 | | | RES,FXD,WW:0.003 OHM,5%,5W | 80009 | 308-0875-00 |
| A15A1R28 | 308-0875-00 | | | RES,FXD,WW:0.003 OHM,5%,5W | 80009 | 308-0875-00 |
| A15A1R33 | 315-0100-02 | | | RES,FXD,CMPSN:10 OHM,5%,0.25W | 80009 | 315-0100-02 |
| A15A1R34 | 315-0100-02 | | | RES,FXD,CMPSN:10 OHM,5%,0.25W | 80009 | 315-0100-02 |
| A15A1R35 | 322-3001-00 | | | RES,FXD:METAL FILM;10 OHM,1%,0.2W,TC=100 PPM;AXIAL,T&R,SMALL BODY | 80009 | 322-3001-00 |
| A15A1R36 | 322-3001-00 | | | RES,FXD:METAL FILM;10 OHM,1%,0.2W,TC=100 PPM;AXIAL,T&R,SMALL BODY | 80009 | 322-3001-00 |
| A15A1R37 | 322-3056-00 | | | RES,FXD,FILM:37.4 OHM,1%,0.2W,TC=T0 | 91637 | CCF50-2F37R40F |
| A15A1R38 | 322-3224-00 | | | RES,FXD,FILM:2.1K OHM,1%,0.2W,TC=T0 | 91637 | CCF50-2F21000F |
| A15A1R39 | 311-2231-00 | | | RES,VAR,TRMR:CERMET;1K OHM,20%,0.5W,0.197 SQ,TOP ADJUST;T&R | TK1450 | GF06UT 1K |
| A15A1R40 | 322-3226-00 | | | RES,FXD:METAL FILM;2.21K OHM,1%,0.2W,TC=100 PPM;AXIAL,T&R,SMALL BODY | 57668 | CRB20 FXE 2K21 |
| A15A1R41 | 322-3260-00 | | | RES,FXD,FILM:4.99K OHM,1%,0.2W,TC=T0 | 57668 | CRB20 FXE 4K99 |
| A15A1R42 | 322-3260-00 | | | RES,FXD,FILM:4.99K OHM,1%,0.2W,TC=T0 | 57668 | CRB20 FXE 4K99 |
| A15A1R43 | 322-3235-00 | | | RES,FXD:METAL FILM;2.74K OHM,1%,0.2W,TC=100 PPM;AXIAL,T&R,SMALL BODY | 57668 | CRB20 FXE 2K74 |
| A15A1R45 | 322-3271-00 | | | RES,FXD,FILM:6.49K OHM,1%,0.2W,TC=T0 | 91637 | CCF502G64900FT |
| A15A1R46 | 322-3299-00 | | | RES,FXD,FILM:12.7K OHM,1%,0.2W,TC=T0 | 80009 | 322-3299-00 |
| A15A1R47 | 322-3289-00 | | | RES,FXD:METAL FILM;10K OHM,1%,0.2W,TC=100 PPM;AXIAL,T&R,SMALL BODY | 80009 | 322-3289-00 |
| A15A1R48 | 322-3264-00 | | | RES,FXD,FILM:5.49K OHM,1%,0.2W,TC=T0 | 57668 | CRB20 FXE 5K49 |
| A15A1R49 | 322-3202-00 | | | RES,FXD,FILM:1.24K OHM,1%,0.2W,TC=T0 | 80009 | 322-3202-00 |
| A15A1R50 | 322-3481-00 | | | RES,FXD,FILM:1M OHM.1%,0.2W,TC=T0 | 80009 | 322-3481-00 |
| A15A1R52 | 322-3289-00 | | | RES,FXD:METAL FILM;10K OHM,1%,0.2W,TC=100 PPM;AXIAL,T&R,SMALL BODY | 80009 | 322-3289-00 |
| A15A1R53 | 322-3235-00 | | | RES,FXD:METAL FILM;2.74K OHM,1%,0.2W,TC=100 PPM;AXIAL,T&R,SMALL BODY | 57668 | CRB20 FXE 2K74 |
| A15A1R54 | 322-3235-00 | | | RES,FXD:METAL FILM;2.74K OHM,1%,0.2W,TC=100 PPM;AXIAL,T&R,SMALL BODY | 57668 | CRB20 FXE 2K74 |
| A15A1R55 | 315-0100-02 | | | RES,FXD,CMPSN:10 OHM,5%,0.25W | 80009 | 315-0100-02 |
| A15A1R56 | 315-0100-02 | | | RES,FXD,CMPSN:10 OHM,5%,0.25W | 80009 | 315-0100-02 |
| A15A1R57 | 315-0100-02 | | | RES,FXD,CMPSN:10 OHM,5%,0.25W | 80009 | 315-0100-02 |
| A15A1R61 | 308-0165-00 | | | RES,FXD,WW:0.5 OHM,5%,5W (COMBO WITH R63) | 00213 | 1550S R500-5 |
| A15A1R63 | 308-0165-00 | | | RES,FXD,WW:0.5 OHM,5%,5W (COMBO WITH R61) | 00213 | 1550S R500-5 |
| A15A1R64 | 322-3275-00 | | | RES,FXD,FILM:7.15K OHM,1%,0.2W,TC=T0 | 80009 | 322-3275-00 |
| A15A1R65 | 322-3260-00 | | | RES,FXD,FILM:4.99K OHM,1%,0.2W,TC=T0 | 57668 | CRB20 FXE 4K99 |
| A15A1R67 | 322-3318-00 | | | RES,FXD:METAL FILM;20K OHM,1%,0.2W,TC=100 PPM;AXIAL,T&R,SMALL BODY | 57668 | CRB20 FXE 20K0 |

| Component No. | Tektronix Part No. | Serial/Assembly No. Effective | Dscont | Name & Description | Mfr. Code | Mfr. Part No. |
|---|---|---|---|---|---|---|
| A15A1R69 | 322-3289-00 | | | RES,FXD:METAL FILM;10K OHM,1%,0.2W,TC=100 PPM;AXIAL,T&R,SMALL BODY | 80009 | 322-3289-00 |
| A15A1R70 | 322-3260-00 | | | RES,FXD,FILM:4.99K OHM,1%,0.2W,TC=T0 | 57668 | CRB20 FXE 4K99 |
| A15A1R71 | 322-3139-00 | | | RES,FXD:METAL FILM;274 OHM,1%,0.2W,TC=100 PPM;AXIAL,T&R,SMALL BODY | 80009 | 322-3139-00 |
| A15A1R72 | 322-3193-00 | | | RES,FXD:METAL FILM;1K OHM,1%,0.2W,TC=100 PPM;AXIAL,T&R,SMALL BODY | 57668 | CRB20 FXE 1K00 |
| A15A1R73 | 322-3231-00 | | | RES,FXD,FILM:2.49K OHM,1%,0.2W,TC=T0 | 80009 | 322-3231-00 |
| A15A1R74 | 322-3231-00 | | | RES,FXD,FILM:2.49K OHM,1%,0.2W,TC=T0 | 80009 | 322-3231-00 |
| A15A1R75 | 322-3260-00 | | | RES,FXD,FILM:4.99K OHM,1%,0.2W,TC=T0 | 57668 | CRB20 FXE 4K99 |
| A15A1R76 | 322-3306-00 | | | RES,FXD:METAL FILM;15K OHM,1%,0.2W,TC=100 PPM;AXIAL,T&R,SMALL BODY | 57668 | CRB20 FXE 15K0 |
| A15A1R77 | 322-3139-00 | | | RES,FXD:METAL FILM;274 OHM,1%,0.2W,TC=100 PPM;AXIAL,T&R,SMALL BODY | 80009 | 322-3139-00 |
| A15A1R78 | 322-3039-00 | | | RES,FXD,FILM:24.9 OHM,1%,0.2W,TC=T0 | 80009 | 322-3039-00 |
| A15A1R79 | 308-0760-00 | | | RES,FXD,WW:0.2 OHM,10%,2W | 80009 | 308-0760-00 |
| A15A1R80 | 322-3318-00 | | | RES,FXD:METAL FILM;20K OHM,1%,0.2W,TC=100 PPM;AXIAL,T&R,SMALL BODY | 57668 | CRB20 FXE 20K0 |
| A15A1R81 | 322-3039-00 | | | RES,FXD,FILM:24.9 OHM,1%,0.2W,TC=T0 | 80009 | 322-3039-00 |
| A15A1R82 | 308-0760-00 | | | RES,FXD,WW:0.2 OHM,10%,2W | 80009 | 308-0760-00 |
| A15A1R83 | 322-3318-00 | | | RES,FXD:METAL FILM;20K OHM,1%,0.2W,TC=100 PPM;AXIAL,T&R,SMALL BODY | 57668 | CRB20 FXE 20K0 |
| A15A1R84 | 322-3213-00 | | | RES,FXD,FILM:1.62K OHM,1%,0.2W,TC=T0 | 57668 | CRB20 FXE 1K62 |
| A15A1R85 | 322-3356-00 | | | RES,FXD,FILM:49.9K OHM,1%,0.2W,TC=T0 | 80009 | 322-3356-00 |
| A15A1R86 | 322-3280-00 | | | RES,FXD,FILM:8.06K OHM,1%,0.2W,TC=T0 | 80009 | 322-3280-00 |
| A15A1R87 | 322-3280-00 | | | RES,FXD,FILM:8.06K OHM,1%,0.2W,TC=T0 | 80009 | 322-3280-00 |
| A15A1R88 | 322-3356-00 | | | RES,FXD,FILM:49.9K OHM,1%,0.2W,TC=T0 | 80009 | 322-3356-00 |
| A15A1R89 | 322-3418-00 | | | RES,FXD:METAL FILM;221K OHM,1%,0.2W,TC=100 PPM;AXIAL,T&R,SMALL BODY | 57668 | CRB20 FXE 221K |
| A15A1R90 | 322-3289-00 | | | RES,FXD:METAL FILM;10K OHM,1%,0.2W,TC=100 PPM;AXIAL,T&R,SMALL BODY | 80009 | 322-3289-00 |
| A15A1R94 | 322-3210-00 | | | RES,FXD:METAL FILM;1.5K OHM,1%,0.2W,TC=100 PPM;AXIAL,T&R,SMALL BODY | 57668 | CRB20 FXE 1K50 |
| A15A1R95 | 322-3210-00 | | | RES,FXD:METAL FILM;1.5K OHM,1%,0.2W,TC=100 PPM;AXIAL,T&R,SMALL BODY | 57668 | CRB20 FXE 1K50 |
| A15A1R96 | 322-3155-00 | | | RES,FXD,FILM:402 OHM,1%,0.2W,TC=T0 | 80009 | 322-3155-00 |
| A15A1R97 | 322-3270-02 | | | RES,FXD,FILM:6.34K OHM,0.5%,0.2W,TC=T2 | 57668 | CRB20 DYE 6K34 |
| A15A1R98 | 322-3203-00 | | | RES,FXD,FILM:1.27K OHM,1%,0.2W,TC=T0 | 80009 | 322-3203-00 |
| A15A1R99 | 322-3287-00 | | | RES,FXD,FILM:9.53K OHM,1%,0.2W,TC=T0 | 80009 | 322-3287-00 |
| A15A1R100 | 322-3231-00 | | | RES,FXD,FILM:2.49K OHM,1%,0.2W,TC=T0 | 80009 | 322-3231-00 |
| A15A1R101 | 322-3232-00 | | | RES,FXD,FILM:2.55K OHM,1%,0.2W,TC=T0 | 80009 | 322-3232-00 |
| A15A1R102 | 322-3231-00 | | | RES,FXD,FILM:2.49K OHM,1%,0.2W,TC=T0 | 80009 | 322-3231-00 |
| A15A1R103 | 322-3210-00 | | | RES,FXD:METAL FILM;1.5K OHM,1%,0.2W,TC=100 PPM;AXIAL,T&R,SMALL BODY | 57668 | CRB20 FXE 1K50 |
| A15A1R104 | 322-3155-00 | | | RES,FXD,FILM:402 OHM,1%,0.2W,TC=T0 | 80009 | 322-3155-00 |
| A15A1R105 | 322-3262-00 | | | RES,FXD,FILM:5.23K OHM,1%,0.2W,TC=T0 | 80009 | 322-3262-00 |
| A15A1R106 | 322-3306-00 | | | RES,FXD:METAL FILM;15K OHM,1%,0.2W,TC=100 PPM;AXIAL,T&R,SMALL BODY | 57668 | CRB20 FXE 15K0 |
| A15A1R107 | 322-3203-00 | | | RES,FXD,FILM:1.27K OHM,1%,0.2W,TC=T0 | 80009 | 322-3203-00 |
| A15A1R108 | 322-3305-00 | | | RES,FXD,FILM:14.7K OHM,1%,0.2W,TC=T0 | 80009 | 322-3305-00 |
| A15A1R109 | 322-3305-00 | | | RES,FXD,FILM:14.7K OHM,1%,0.2W,TC=T0 | 80009 | 322-3305-00 |
| A15A1R110 | 322-3135-00 | | | RES,FXD,FILM:249 OHM,1%,0.2W,TC=T0 | 80009 | 322-3135-00 |
| A15A1R111 | 322-3228-00 | | | RES,FXD,FILM:2.32K OHM,1%,0.2W,TC=T0 | 80009 | 322-3228-00 |
| A15A1R112 | 322-3258-00 | | | RES,FXD:METAL FILM;4.75K OHM,1%,0.2W,TC=100 PPM;AXIAL,T&R,SMALL BODY | 80009 | 322-3258-00 |
| A15A1R113 | 322-3258-00 | | | RES,FXD:METAL FILM;4.75K OHM,1%,0.2W,TC=100 PPM;AXIAL,T&R,SMALL BODY | 80009 | 322-3258-00 |
| A15A1R114 | 322-3356-00 | | | RES,FXD,FILM:49.9K OHM,1%,0.2W,TC=T0 | 80009 | 322-3356-00 |
| A15A1R121 | 315-0122-00 | | | RES,FXD,FILM:1.2K OHM,5%,0.25W | 80009 | 315-0122-00 |

| Component No. | Tektronix Part No. | Serial/Assembly No. Effective | Dscont | Name & Description | Mfr. Code | Mfr. Part No. |
|---|---|---|---|---|---|---|
| A15A1R122 | 322-3216-00 | | | RES,FXD,FILM:1.74K OHM,1%,0.2W,TC=T0 | 57668 | CRB20 FXE 1K74 |
| A15A1R123 | 322-3001-00 | | | RES,FXD:METAL FILM;10 OHM,1%,0.2W,TC=100 PP M;AXIAL,T&R,SMALL BODY | 80009 | 322-3001-00 |
| A15A1R124 | 322-3001-00 | | | RES,FXD:METAL FILM;10 OHM,1%,0.2W,TC=100 PP M;AXIAL,T&R,SMALL BODY | 80009 | 322-3001-00 |
| A15A1R125 | 322-3258-00 | 119-4258-00 | 119-4258-01 | RES,FXD:METAL FILM;4.75K OHM,1%,0.2W,TC=100 PPM;AXIAL,T&R,SMALL BODY | 80009 | 322-3258-00 |
| A15A1R125 | 322-3193-00 | 119-4258-02 | | RES,FXD:METAL FILM;1K OHM,1%,0.2W,TC=100 PP M;AXIAL,T&R,SMALL BODY | 57668 | CRB20 FXE 1K00 |
| A15A1R126 | 322-3012-00 | | | RES,FXD,FILM:13 OHM,1%,0.2W,TC=T0 | 57668 | CRB20FXE301E |
| A15A1R127 | 322-3012-00 | 119-4258-00 | 119-4258-01 | RES,FXD,FILM:13 OHM,1%,0.2W,TC=T0 | 57668 | CRB20FXE301E |
| A15A1R127 | 322-3011-00 | 119-4258-02 | | RES,FXD,FILM:12.7 OHM,1%,0.2W,TC=T0 | 57668 | CRB20FXE316E |
| A15A1R127 | 322-3007-00 | 119-4258-02 | | RES,FXD,FILM:11.5 OHM,1%,0.2W,TC=T0 | 57668 | CRB20FXE511E |
| A15A1R127 | 322-3014-00 | 119-4258-02 | | RES,FXD,FILM:13.7 OHM,1%,0.2W,TC=T0 (TEST SELECTABLE) | 57668 | CRB20FXE78E7 |
| A15A1R128 | 322-3160-00 | | | RES,FXD,FILM:453 OHM,1%,0.2W,TC=T0 | 80009 | 322-3160-00 |
| A15A1R129 | 315-0122-00 | | | RES,FXD,FILM:1.2K OHM,5%,0.25W | 80009 | 315-0122-00 |
| A15A1R132 | 322-3265-00 | | | RES,FXD:METAL FILM;5.62K OHM,1%,0.2W,TC=100 PPM;AXIAL,T&R,SMALL BODY | 80009 | 322-3265-00 |
| A15A1R134 | 322-3258-00 | | | RES,FXD:METAL FILM;4.75K OHM,1%,0.2W,TC=100 PPM;AXIAL,T&R,SMALL BODY | 80009 | 322-3258-00 |
| A15A1R135 | 322-3202-00 | | | RES,FXD,FILM:1.24K OHM,1%,0.2W,TC=T0 | 80009 | 322-3202-00 |
| A15A1R136 | 322-3353-00 | | | RES,FXD,FILM:46.4K OHM,1%,0.2W,TC=T0 | 91637 | CCF50-2F46401F |
| A15A1R137 | 322-3437-00 | | | RES,FXD,FILM:348K OHM,1%,0.2W,TC=T0 | 80009 | 322-3437-00 |
| A15A1R138 | 322-3437-00 | | | RES,FXD,FILM:348K OHM,1%,0.2W,TC=T0 | 80009 | 322-3437-00 |
| A15A1R139 | 322-3441-00 | | | RES,FXD,FILM:383K OHM,1%,0.2W,TC=T0 | 91637 | CCF50-2F38302F |
| A15A1R140 | 322-3228-00 | | | RES,FXD,FILM:2.32K OHM,1%,0.2W,TC=T0 | 80009 | 322-3228-00 |
| A15A1R141 | 322-3265-00 | | | RES,FXD:METAL FILM;5.62K OHM,1%,0.2W,TC=100 PPM;AXIAL,T&R,SMALL BODY | 80009 | 322-3265-00 |
| A15A1R142 | 322-3338-00 | | | RES,FXD,FILM:32.4K OHM,1%,0.2W,TC=T0 | 91637 | CCF50-2F32401F |
| A15A1R143 | 322-3289-00 | | | RES,FXD:METAL FILM;10K OHM,1%,0.2W,TC=100 PPM;AXIAL,T&R,SMALL BODY | 80009 | 322-3289-00 |
| A15A1R144 | 322-3289-00 | | | RES,FXD:METAL FILM;10K OHM,1%,0.2W,TC=100 PPM;AXIAL,T&R,SMALL BODY | 80009 | 322-3289-00 |
| A15A1R145 | 322-3284-00 | | | RES,FXD,FILM:8.87K OHM,1%,0.2W,TC=T0 | 57668 | CRB20 FXE 8K87 |
| A15A1R146 | 322-3193-00 | | | RES,FXD:METAL FILM;1K OHM,1%,0.2W,TC=100 PP M;AXIAL,T&R,SMALL BODY | 57668 | CRB20 FXE 1K00 |
| A15A1R147 | 322-3255-00 | | | RES,FXD,FILM:4.42K OHM,1%,0.2W,TC=T0 | 80009 | 322-3255-00 |
| A15A1R150 | 322-3289-00 | | | RES,FXD:METAL FILM;10K OHM,1%,0.2W,TC=100 PPM;AXIAL,T&R,SMALL BODY | 80009 | 322-3289-00 |
| A15A1R151 | 322-3402-00 | | | RES,FXD:METAL FILM;150K OHM,1%,0.2W,TC=100 PPM;AXIAL,T&R,SMALL BODY | 80009 | 322-3402-00 |
| A15A1R152 | 322-3277-00 | | | RES,FXD,FILM:7.5K OHM,1%,0.2W,TC=T0 | 57668 | CRB20 FXE 7K50 |
| A15A1R153 | 322-3039-00 | | | RES,FXD,FILM:24.9 OHM,1%,0.2W,TC=T0 | 80009 | 322-3039-00 |
| A15A1R154 | 322-3181-00 | | | RES,FXD,FILM:750 OHM,1%,0.2W,TC=T0 | 80009 | 322-3181-00 |
| A15A1R155 | 308-0793-00 | | | RES,FXD:0.51 OHM,5%,1WTC=150PPM/DEG C,MITAPE & REEL | 80009 | 308-0793-00 |
| A15A1R156 | 322-3235-00 | | | RES,FXD:METAL FILM;2.74K OHM,1%,0.2W,TC=100 PPM;AXIAL,T&R,SMALL BODY | 57668 | CRB20 FXE 2K74 |
| A15A1R157 | 322-3235-00 | | | RES,FXD:METAL FILM;2.74K OHM,1%,0.2W,TC=100 PPM;AXIAL,T&R,SMALL BODY | 57668 | CRB20 FXE 2K74 |
| A15A1R158 | 322-3235-00 | | | RES,FXD:METAL FILM;2.74K OHM,1%,0.2W,TC=100 PPM;AXIAL,T&R,SMALL BODY | 57668 | CRB20 FXE 2K74 |
| A15A1R159 | 322-3202-00 | | | RES,FXD,FILM:1.24K OHM,1%,0.2W,TC=T0 | 80009 | 322-3202-00 |
| A15A1R160 | 322-3235-00 | | | RES,FXD:METAL FILM;2.74K OHM,1%,0.2W,TC=100 PPM;AXIAL,T&R,SMALL BODY | 57668 | CRB20 FXE 2K74 |
| A15A1R161 | 322-3206-00 | | | RES,FXD,FILM:1.37K OHM,1%,0.2W,TC=T0 | 80009 | 322-3206-00 |
| A15A1R162 | 322-3206-00 | | | RES,FXD,FILM:1.37K OHM,1%,0.2W,TC=T0 | 80009 | 322-3206-00 |
| A15A1R163 | 322-3206-00 | | | RES,FXD,FILM:1.37K OHM,1%,0.2W,TC=T0 | 80009 | 322-3206-00 |
| A15A1R164 | 322-3206-00 | | | RES,FXD,FILM:1.37K OHM,1%,0.2W,TC=T0 | 80009 | 322-3206-00 |

| Component No. | Tektronix Part No. | Serial/Assembly No. Effective | Dscont | Name & Description | Mfr. Code | Mfr. Part No. |
|---|---|---|---|---|---|---|
| A15A1R165 | 322-3126-00 | | | RES,FXD,FILM:200 OHM,1%,0.2W,TC=T0 | 80009 | 322-3126-00 |
| A15A1R166 | 322-3126-00 | | | RES,FXD,FILM:200 OHM,1%,0.2W,TC=T0 | 80009 | 322-3126-00 |
| A15A1R167 | 322-3289-00 | | | RES,FXD:METAL FILM;10K OHM,1%,0.2W,TC=100 PPM;AXIAL,T&R,SMALL BODY | 80009 | 322-3289-00 |
| A15A1R168 | 322-3210-00 | | | RES,FXD:METAL FILM;1.5K OHM,1%,0.2W,TC=100 PPM;AXIAL,T&R,SMALL BODY | 57668 | CRB20 FXE 1K50 |
| A15A1R169 | 322-3346-00 | | | RES,FXD:METAL FILM;39.2K OHM,1%,0.2W,TC=100 PPM;AXIAL,T&R,SMALL BODY | 80009 | 322-3346-00 |
| A15A1R201 | 322-3289-00 | | | RES,FXD:METAL FILM;10K OHM,1%,0.2W,TC=100 PPM;AXIAL,T&R,SMALL BODY | 80009 | 322-3289-00 |
| A15A1R230 | 322-3193-00 | | | RES,FXD:METAL FILM;1K OHM,1%,0.2W,TC=100 PPM;AXIAL,T&R,SMALL BODY | 57668 | CRB20 FXE 1K00 |
| A15A1R258 | 322-3356-00 | | | RES,FXD,FILM:49.9K OHM,1%,0.2W,TC=T0 | 80009 | 322-3356-00 |
| A15A1R260 | 322-3431-00 | | | RES,FXD,FILM:301K OHM,1%,0.2W,TC=T0 | 57668 | CRB20 FXE 301K |
| A15A1R261 | 322-3356-00 | | | RES,FXD,FILM:49.9K OHM,1%,0.2W,TC=T0 | 80009 | 322-3356-00 |
| A15A1R262 | 322-3258-00 | | | RES,FXD:METAL FILM;4.75K OHM,1%,0.2W,TC=100 PPM;AXIAL,T&R,SMALL BODY | 80009 | 322-3258-00 |
| A15A1R420 | 322-3251-00 | | | RES,FXD,FILM:4.02K OHM,1%,0.2W,TC=T0 | 57668 | CRB20 FXE 4K02 |
| A15A1R640 | 322-3139-00 | | | RES,FXD:METAL FILM;274 OHM,1%,0.2W,TC=100 PPM;AXIAL,T&R,SMALL BODY | 80009 | 322-3139-00 |
| A15A1R641 | 322-3289-00 | | | RES,FXD:METAL FILM;10K OHM,1%,0.2W,TC=100 PPM;AXIAL,T&R,SMALL BODY | 80009 | 322-3289-00 |
| A15A1R642 | 322-3039-00 | | | RES,FXD,FILM:24.9 OHM,1%,0.2W,TC=T0 | 80009 | 322-3039-00 |
| A15A1R643 | 301-0274-00 | | | RES,FXD,FILM:270K OHM,5%,0.5W | 80009 | 301-0274-00 |
| A15A1R644 | 322-3212-00 | | | RES,FXD,FILM:1.58K OHM,1%,0.2W,TC=T0 | 57668 | CRB20 FXE 1K58 |
| A15A1R645 | 322-3150-00 | | | RES,FXD,FILM:357 OHM,1%,0.2W,TC=T0 | 80009 | 322-3150-00 |
| A15A1R646 | 322-3086-00 | | | RES,FXD,FILM:76.8 OHM,1%,0.2W,TC=T0 | 91637 | CCF50-2G76R80F |
| A15A1R647 | 322-3212-00 | | | RES,FXD,FILM:1.58K OHM,1%,0.2W,TC=T0 | 57668 | CRB20 FXE 1K58 |
| A15A1R648 | 322-3212-00 | | | RES,FXD,FILM:1.58K OHM,1%,0.2W,TC=T0 | 57668 | CRB20 FXE 1K58 |
| A15A1R649 | 322-3096-00 | | | RES,FXD,FILM:97.6 OHM,1%.0.2W,TC=T0 | 80009 | 322-3096-00 |
| A15A1R650 | 315-0622-00 | | | RES,FXD,FILM:6.2K OHM,5%,0.25W | 80009 | 315-0622-00 |
| A15A1R651 | 322-3243-00 | | | RES,FXD:METAL FILM;3.32K OHM,1%,0.2W,TC=100 PPM;AXIAL,T&R,SMALL BODY | 91637 | CCF50-1-G33200F |
| A15A1R652 | 322-3289-00 | | | RES,FXD:METAL FILM;10K OHM,1%,0.2W,TC=100 PPM;AXIAL,T&R,SMALL BODY | 80009 | 322-3289-00 |
| A15A1R653 | 322-3289-00 | | | RES,FXD:METAL FILM;10K OHM,1%,0.2W,TC=100 PPM;AXIAL,T&R,SMALL BODY | 80009 | 322-3289-00 |
| A15A1RT1 | 307-0746-00 | | | RES,THERMAL:5 OHM,10%,7A/DEG C | 80009 | 307-0746-00 |
| A15A1RT5 | 307-0919-00 | | | RES,THERMAL:100K OHM,10% @ 25DEG C | 80009 | 307-0919-00 |
| | | | | *MOUNTING PARTS* | | |
| | 211-0012-00 | | | SCREW,MACHINE:4-40 X 0.375,PNH,STL | 93907 | ORDER BY DESCR |
| | | | | *END MOUNTING PARTS* | | |
| A15A1RV1 | 307-0449-00 | | | RES,V SENSITIVE:1900PF,100A,130V,METAL OXD SAFETY CONTROLLED | 03508 | V130LA20A |
| | | | | *ATTACHED PARTS* | | |
| | 162-0676-00 | | | INSUL SLVG,ELEC:HT SHRINK,0.75 ID | 06090 | VERSAFIT |
| | | | | *END ATTACHED PARTS* | | |
| A15A1RV2 | 307-0449-00 | | | RES,V SENSITIVE:1900PF,100A,130V,METAL OXD SAFETY CONTROLLED | 03508 | V130LA20A |
| | | | | *ATTACHED PARTS* | | |
| | 162-0676-00 | | | INSUL SLVG,ELEC:HT SHRINK,0.75 ID | 06090 | VERSAFIT |
| | | | | *END ATTACHED PARTS* | | |
| A15A1S1 | 260-2443-00 | | | SWITCH,PUSH:POWER,DPST,6A,250VAC | 80009 | 260-2443-00 |
| | | | | *ATTACHED PARTS* | | |
| | 366-1160-00 | | | PUSH BUTTON:CHARCOAL,0.523 X 0.253 X 0.43 | 80009 | 366-1160-00 |
| | | | | *END ATTACHED PARTS* | | |
| A15A1S2 | 260-2116-00 | | | SWITCH,SLIDE:DPDT,10A,125VAC,LINE SEL | 04426 | 18-000-0019 |
| A15A1T1 | 120-1910-00 | | | TRANSFORMER,PWR: | 80009 | 120-1910-00 |
| A15A1T2 | 120-1911-00 | 119-4258-00 | 119-4258-00 | TRANSFORMER,PWR: | 80009 | 120-1911-00 |
| A15A1T2 | 120-1911-01 | 119-4258-01 | | TRANSFORMER,PWR: | 80009 | 120-1911-01 |

| Component No. | Tektronix Part No. | Serial/Assembly No. Effective | Dscont | Name & Description | Mfr. Code | Mfr. Part No. |
|---|---|---|---|---|---|---|
| A15A1T3 | 120-1670-00 | | | TRANSFORMER:CURRENT SENSE,DUAL,TWO CORE,1.100,1.100,POTTED | TK1441 | 85-801-4 |
| A15A1T4 | 120-1655-00 | | | TRANSFORMER,PWR:GATE DR,1:1:1,1.5MH,50KHZ | TK1441 | 85-404-2 |
| A15A1T5 | 120-1655-00 | | | TRANSFORMER,PWR:GATE DR,1:1:1,1.5MH,50KHZ | TK1441 | 85-404-2 |
| A15A1TP2 | 214-4085-00 | | | TERM,TEST POINT:0.070 ID,0.220 H,0.063 DIA PCB,0.015 X 0.032 BRASS,W/ RED NYLON COLLAR | 26364 | 104-01-02 |
| A15A1TP3 | 214-4085-00 | | | TERM,TEST POINT:0.070 ID,0.220 H,0.063 DIA PCB,0.015 X 0.032 BRASS,W/ RED NYLON COLLAR | 26364 | 104-01-02 |
| A15A1TP4 | 214-4085-00 | | | TERM,TEST POINT:0.070 ID,0.220 H,0.063 DIA PCB,0.015 X 0.032 BRASS,W/ RED NYLON COLLAR | 26364 | 104-01-02 |
| A15A1TP5 | 214-4085-00 | | | TERM,TEST POINT:0.070 ID,0.220 H,0.063 DIA PCB,0.015 X 0.032 BRASS,W/ RED NYLON COLLAR | 26364 | 104-01-02 |
| A15A1TP6 | 214-4085-00 | | | TERM,TEST POINT:0.070 ID,0.220 H,0.063 DIA PCB,0.015 X 0.032 BRASS,W/ RED NYLON COLLAR | 26364 | 104-01-02 |
| A15A1TP10 | 131-0608-00 | | | TERMINAL,PIN:0.365 L X 0.025 BRZ GLD PL | 80009 | 131-0608-00 |
| A15A1TP11 | 131-0608-00 | | | TERMINAL,PIN:0.365 L X 0.025 BRZ GLD PL | 80009 | 131-0608-00 |
| A15A1TP12 | 131-0608-00 | | | TERMINAL,PIN:0.365 L X 0.025 BRZ GLD PL | 80009 | 131-0608-00 |
| A15A1TP13 | 131-0608-00 | | | TERMINAL,PIN:0.365 L X 0.025 BRZ GLD PL | 80009 | 131-0608-00 |
| A15A1TP14 | 131-0608-00 | | | TERMINAL,PIN:0.365 L X 0.025 BRZ GLD PL | 80009 | 131-0608-00 |
| A15A1TP15 | 131-0608-00 | | | TERMINAL,PIN:0.365 L X 0.025 BRZ GLD PL | 80009 | 131-0608-00 |
| A15A1TP16 | 131-0608-00 | | | TERMINAL,PIN:0.365 L X 0.025 BRZ GLD PL | 80009 | 131-0608-00 |
| A15A1TP17 | 131-0608-00 | | | TERMINAL,PIN:0.365 L X 0.025 BRZ GLD PL | 80009 | 131-0608-00 |
| A15A1TP18 | 131-0608-00 | | | TERMINAL,PIN:0.365 L X 0.025 BRZ GLD PL | 80009 | 131-0608-00 |
| A15A1TP19 | 131-0608-00 | | | TERMINAL,PIN:0.365 L X 0.025 BRZ GLD PL | 80009 | 131-0608-00 |
| A15A1TP20 | 214-4085-00 | | | TERM,TEST POINT:0.070 ID,0.220 H,0.063 DIA PCB,0.015 X 0.032 BRASS,W/ RED NYLON COLLAR | 26364 | 104-01-02 |
| A15A1TP21 | 214-4085-00 | | | TERM,TEST POINT:0.070 ID,0.220 H,0.063 DIA PCB,0.015 X 0.032 BRASS,W/ RED NYLON COLLAR | 26364 | 104-01-02 |
| A15A1TP22 | 214-4085-00 | | | TERM,TEST POINT:0.070 ID,0.220 H,0.063 DIA PCB,0.015 X 0.032 BRASS,W/ RED NYLON COLLAR | 26364 | 104-01-02 |
| A15A1U2 | 156-0285-00 | | | IC,LINEAR:BIPOLAR,VOLTAGE REGULATOR;POSITIVE,12V,1.0A,4%;MC7812CT,TO-220 | 80009 | 156-0285-00 |
| A15A1U5 | 156-1631-00 | 119-4258-00 | 119-4258-00 | IC,LINEAR:BIPOLAR,VOLTAGE REGULATOR;SHUNT,ADJUSTABLE,100MA;TL431CLP,TO-92 | 01295 | TL431C-LP |
| A15A1U5 | 156-1631-01 | 119-4258-01 | | IC,LINEAR:BIPOLAR,VOLTAGE REGULATOR;ADJUSTABLE,SHUNT,100MA,2.2%;TL431CLP,TO-92 T&A | 80009 | 156-1631-01 |
| A15A1U6 | 156-2873-00 | | | IC,LINEAR:BIFET,OP-AMP;DUAL;MC34082P,DIP08.3 | 80009 | 156-2873-00 |
| A15A1U7 | 156-1225-00 | | | IC,LINEAR:BIPOLAR,COMPARATOR;DUAL,OPEN COLLECTOR,300NS;LM393N,DIP08.3 | 01295 | LM393P |
| A15A1U8 | 156-3827-00 | | | IC,LINEAR: | 80009 | 156-3827-00 |
| A15A1U10 | 156-0366-00 | | | IC,DIGITAL:CMOS,FLIP FLOP;DUAL D-TYPE;4013B,DIP14.3,TUBE | 80009 | 156-0366-00 |
| A15A1U11 | 156-2462-00 | | | IC,MISC:CMOS,MISC;QUAD POWER MOSFET GATE DRIVER;D469ADJ,DIP14.3 | 80009 | 156-2462-00 |
| A15A1U12 | 156-0853-00 | | | IC,LINEAR:BIPOLAR,OP-AMP;DUAL,SINGLE SUPPLY;LM358N,DIP08.3 | 80009 | 156-0853-00 |
| A15A1U16 | 156-4205-00 | | | IC,MISC: | 80009 | 156-4205-00 |
| A15A1U20 | 156-1225-00 | | | IC,LINEAR:BIPOLAR,COMPARATOR;DUAL,OPEN COLLECTOR,300NS;LM393N,DIP08.3 | 01295 | LM393P |
| A15A1U21 | 156-1226-00 | | | IC,LINEAR:BIPOLAR,COMPARATOR;DUAL,OPEN COLLECTOR,80NS;LM319N,DIP14.3 | 18324 | LM319F |
| A15A1U22 | 156-1225-00 | | | IC,LINEAR:BIPOLAR,COMPARATOR;DUAL,OPEN COLLECTOR,300NS;LM393N,DIP08.3 | 01295 | LM393P |
| A15A1U24 | 156-0853-00 | | | IC,LINEAR:BIPOLAR,OP-AMP;DUAL,SINGLE SUPPLY;LM358N,DIP08.3 | 80009 | 156-0853-00 |
| A15A1U25 | 156-4104-00 | | | IC,LINEAR: | 80009 | 156-4104-00 |
| A15A1U26 | 156-0524-00 | | | IC,DIGITAL:CMOS,GATE;TRIPLE 3-INPUT NAND;4023B,DIP14.3,TUBE | 02735 | CD4023BF |

| Component No. | Tektronix Part No. | Serial/Assembly No. Effective | Dscont | Name & Description | Mfr. Code | Mfr. Part No. |
|---|---|---|---|---|---|---|
| A15A1U28 | 156-0494-00 | | | IC,DIGITAL:CMOS,BUFFER/DRIVER;HEX INV;4049B ,DIP16.3,TUBE | 80009 | 156-0494-00 |
| A15A1U30 | 156-1225-00 | | | IC,LINEAR:BIPOLAR,COMPARATOR;DUAL,OPEN COLL ECTOR,300NS;LM393N,DIP08.3 | 01295 | LM393P |
| A15A1VR2 | 152-0175-01 | | | SEMICOND DVC,DI:ZEN,SI,5.6V,5%,0.4W,DO-7 | 80009 | 152-0175-01 |
| A15A1VR3 | 152-0175-01 | | | SEMICOND DVC,DI:ZEN,SI,5.6V,5%,0.4W,DO-7 | 80009 | 152-0175-01 |
| A15A1VR130 | 152-0175-01 | | | SEMICOND DVC,DI:ZEN,SI,5.6V,5%,0.4W,DO-7 | 80009 | 152-0175-01 |

| Component No. | Tektronix Part No. | Serial/Assembly No. Effective | Dscont | Name & Description | Mfr. Code | Mfr. Part No. |
|---|---|---|---|---|---|---|
| A16 | 671-0111-00 | | | CIRCUIT BD ASSY:ON/OFF | 80009 | 671-0111-00 |
| A16DS155 | 150-1043-00 | | | DIODE,OPTO:,LED;RED,635NM,1.5MCD @ IF=20MA; MV5774C,T1 | 58361 | MV5774C |
| | | | | *ATTACHED PARTS* | | |
| | 352-0865-00 | | | HOLDER,LED:SINGLE | 80009 | 352-0865-00 |
| | | | | *END ATTACHED PARTS* | | |
| A16DS160 | 150-1029-00 | | | LT EMITTING DIO:GREEN,565NM,35MA | 58361 | Q6480/MV5274C |
| | | | | *ATTACHED PARTS* | | |
| | 352-0865-00 | | | HOLDER,LED:SINGLE | 80009 | 352-0865-00 |
| | | | | *END ATTACHED PARTS* | | |
| A16DS165 | 150-1043-00 | | | DIODE,OPTO:,LED;RED,635NM,1.5MCD @ IF=20MA; MV5774C,T1 | 58361 | MV5774C |
| | | | | *ATTACHED PARTS* | | |
| | 352-0865-00 | | | HOLDER,LED:SINGLE | 80009 | 352-0865-00 |
| | | | | *END ATTACHED PARTS* | | |
| A16J140 | 131-1857-00 | | | CONN,HDR:PCB,:MALE,STR,1 X 36,0.1 CTR,0.230 MLG X 0.100 TAIL,GOLD:,, | 58050 | 082-3644-SS10 |
| A16R150 | 315-0222-00 | | | RES,FXD,FILM:2.2K OHM,5%,0.25W | 80009 | 315-0222-00 |
| A16S145 | 260-2392-00 | | | SWITCH,ROCKER:DPDT,5A,120VAC | 09353 | 7201-J1-C-Q-E |

| Component No. | Tektronix Part No. | Serial/Assembly No. Effective | Dscont | Name & Description | Mfr. Code | Mfr. Part No. |
|---|---|---|---|---|---|---|
| A18 | 671-1911-00 | B030000 | B030139 | CIRCUIT BD ASSY:DATA ACQUISITION/CONTROLLER | 80009 | 671-1911-00 |
| A18 | 671-1911-01 | B030140 | B030217 | CIRCUIT BD ASSY:DATA ACQUISITION/CONTROLLER | 80009 | 671-1911-01 |
| A18 | 671-1911-02 | B030218 | B031048 | CIRCUIT BD ASSY:DATA ACQUISITION/CONTROLLER | 80009 | 671-1911-02 |
| A18 | 671-1911-03 | B031049 | B031198 | CIRCUIT BD ASSY:DATA ACQUISITION/CONTROLLER | 80009 | 671-1911-03 |
| A18 | 671-1911-04 | B031199 | B031223 | CIRCUIT BD ASSY:DATA ACQUISITION/CONTROLLER | 80009 | 671-1911-04 |
| A18 | 671-1911-05 | B031224 | | CIRCUIT BD ASSY:DATA ACQUISITION/CONTROLLER | 80009 | 671-1911-05 |
| | | | | *ATTACHED PARTS* | | |
| | 105-0160-00 | | | EJECTOR,CKT BD:WHITE PLASTIC (QUANTITY 2) | 80009 | 105-0160-00 |
| | 214-1337-00 | | | PIN,SPRING:0.25 L X 0.103 OD,STL CD PL (QUANTITY 2) | 000BK | ORDER BY DESCR |
| | | | | *END ATTACHED PARTS* | | |
| A18C1 | 290-0966-00 | | | CAP,FXD,ELCTLT:220UF,+50-20%,25V | 55680 | TLBIE221MAA |
| A18C3 | 290-1107-00 | | | CAP,FXD,ELCTLT:10UF,20%,50V | 80009 | 290-1107-00 |
| A18C4 | 290-1107-00 | | | CAP,FXD,ELCTLT:10UF,20%,50V | 80009 | 290-1107-00 |
| A18C5 | 290-0966-00 | | | CAP,FXD,ELCTLT:220UF,+50-20%,25V | 55680 | TLBIE221MAA |
| A18C6 | 290-1107-00 | | | CAP,FXD,ELCTLT:10UF,20%,50V | 80009 | 290-1107-00 |
| A18C10 | 281-0759-00 | | | CAP,FXD,CER DI:22PF,10%,100V | 80009 | 281-0759-00 |
| A18C11 | 281-0765-00 | | | CAP,FXD,CER DI:100PF,5%,100V | 04222 | SA102A101JAA |
| A18C41 | 281-0916-00 | | | CAP,FXD,CER DI:0.047UF,+/-10%,50V,AXIAL,0.1 20 INCH DIA,CONFORMAL | 04222 | SA115C473KAA |
| A18C42 | 281-0916-00 | | | CAP,FXD,CER DI:0.047UF,+/-10%,50V,AXIAL,0.1 20 INCH DIA,CONFORMAL | 04222 | SA115C473KAA |
| A18C43 | 281-0916-00 | | | CAP,FXD,CER DI:0.047UF,+/-10%,50V,AXIAL,0.1 20 INCH DIA,CONFORMAL | 04222 | SA115C473KAA |
| A18C44 | 281-0916-00 | | | CAP,FXD,CER DI:0.047UF,+/-10%,50V,AXIAL,0.1 20 INCH DIA,CONFORMAL | 04222 | SA115C473KAA |
| A18C45 | 281-0916-00 | | | CAP,FXD,CER DI:0.047UF,+/-10%,50V,AXIAL,0.1 20 INCH DIA,CONFORMAL | 04222 | SA115C473KAA |
| A18C46 | 281-0916-00 | | | CAP,FXD,CER DI:0.047UF,+/-10%,50V,AXIAL,0.1 20 INCH DIA,CONFORMAL | 04222 | SA115C473KAA |
| A18C47 | 281-0916-00 | | | CAP,FXD,CER DI:0.047UF,+/-10%,50V,AXIAL,0.1 20 INCH DIA,CONFORMAL | 04222 | SA115C473KAA |
| A18C50 | 281-0916-00 | | | CAP,FXD,CER DI:0.047UF,+/-10%,50V,AXIAL,0.1 20 INCH DIA,CONFORMAL | 04222 | SA115C473KAA |
| A18C51 | 281-0916-00 | | | CAP,FXD,CER DI:0.047UF,+/-10%,50V,AXIAL,0.1 20 INCH DIA,CONFORMAL | 04222 | SA115C473KAA |
| A18C52 | 281-0916-00 | | | CAP,FXD,CER DI:0.047UF,+/-10%,50V,AXIAL,0.1 20 INCH DIA,CONFORMAL | 04222 | SA115C473KAA |
| A18C53 | 281-0916-00 | | | CAP,FXD,CER DI:0.047UF,+/-10%,50V,AXIAL,0.1 20 INCH DIA,CONFORMAL | 04222 | SA115C473KAA |
| A18C54 | 281-0916-00 | | | CAP,FXD,CER DI:0.047UF,+/-10%,50V,AXIAL,0.1 20 INCH DIA,CONFORMAL | 04222 | SA115C473KAA |
| A18C55 | 281-0916-00 | | | CAP,FXD,CER DI:0.047UF,+/-10%,50V,AXIAL,0.1 20 INCH DIA,CONFORMAL | 04222 | SA115C473KAA |
| A18C56 | 281-0916-00 | | | CAP,FXD,CER DI:0.047UF,+/-10%,50V,AXIAL,0.1 20 INCH DIA,CONFORMAL | 04222 | SA115C473KAA |
| A18C57 | 281-0916-00 | | | CAP,FXD,CER DI:0.047UF,+/-10%,50V,AXIAL,0.1 20 INCH DIA,CONFORMAL | 04222 | SA115C473KAA |
| A18C58 | 281-0916-00 | | | CAP,FXD,CER DI:0.047UF,+/-10%,50V,AXIAL,0.1 20 INCH DIA,CONFORMAL | 04222 | SA115C473KAA |
| A18C59 | 281-0916-00 | | | CAP,FXD,CER DI:0.047UF,+/-10%,50V,AXIAL,0.1 20 INCH DIA,CONFORMAL | 04222 | SA115C473KAA |
| A18C60 | 281-0916-00 | | | CAP,FXD,CER DI:0.047UF,+/-10%,50V,AXIAL,0.1 20 INCH DIA,CONFORMAL | 04222 | SA115C473KAA |
| A18C61 | 281-0916-00 | | | CAP,FXD,CER DI:0.047UF,+/-10%,50V,AXIAL,0.1 20 INCH DIA,CONFORMAL | 04222 | SA115C473KAA |
| A18C62 | 281-0916-00 | | | CAP,FXD,CER DI:0.047UF,+/-10%,50V,AXIAL,0.1 20 INCH DIA,CONFORMAL | 04222 | SA115C473KAA |

| Component No. | Tektronix Part No. | Serial/Assembly No. Effective | Dscont | Name & Description | Mfr. Code | Mfr. Part No. |
|---|---|---|---|---|---|---|
| A18C63 | 281-0916-00 | | | CAP,FXD,CER DI:0.047UF,+/-10%,50V,AXIAL,0.1 20 INCH DIA,CONFORMAL | 04222 | SA115C473KAA |
| A18C64 | 281-0916-00 | | | CAP,FXD,CER DI:0.047UF,+/-10%,50V,AXIAL,0.1 20 INCH DIA,CONFORMAL | 04222 | SA115C473KAA |
| A18C65 | 281-0916-00 | | | CAP,FXD,CER DI:0.047UF,+/-10%,50V,AXIAL,0.1 20 INCH DIA,CONFORMAL | 04222 | SA115C473KAA |
| A18C66 | 281-0916-00 | | | CAP,FXD,CER DI:0.047UF,+/-10%,50V,AXIAL,0.1 20 INCH DIA,CONFORMAL | 04222 | SA115C473KAA |
| A18C67 | 281-0916-00 | | | CAP,FXD,CER DI:0.047UF,+/-10%,50V,AXIAL,0.1 20 INCH DIA,CONFORMAL | 04222 | SA115C473KAA |
| A18C68 | 281-0916-00 | | | CAP,FXD,CER DI:0.047UF,+/-10%,50V,AXIAL,0.1 20 INCH DIA,CONFORMAL | 04222 | SA115C473KAA |
| A18C69 | 281-0916-00 | | | CAP,FXD,CER DI:0.047UF,+/-10%,50V,AXIAL,0.1 20 INCH DIA,CONFORMAL | 04222 | SA115C473KAA |
| A18C70 | 281-0916-00 | | | CAP,FXD,CER DI:0.047UF,+/-10%,50V,AXIAL,0.1 20 INCH DIA,CONFORMAL | 04222 | SA115C473KAA |
| A18C71 | 281-0916-00 | | | CAP,FXD,CER DI:0.047UF,+/-10%,50V,AXIAL,0.1 20 INCH DIA,CONFORMAL | 04222 | SA115C473KAA |
| A18C72 | 281-0916-00 | | | CAP,FXD,CER DI:0.047UF,+/-10%,50V,AXIAL,0.1 20 INCH DIA,CONFORMAL | 04222 | SA115C473KAA |
| A18C73 | 281-0916-00 | | | CAP,FXD,CER DI:0.047UF,+/-10%,50V,AXIAL,0.1 20 INCH DIA,CONFORMAL | 04222 | SA115C473KAA |
| A18C74 | 281-0916-00 | | | CAP,FXD,CER DI:0.047UF,+/-10%,50V,AXIAL,0.1 20 INCH DIA,CONFORMAL | 04222 | SA115C473KAA |
| A18C75 | 281-0916-00 | | | CAP,FXD,CER DI:0.047UF,+/-10%,50V,AXIAL,0.1 20 INCH DIA,CONFORMAL | 04222 | SA115C473KAA |
| A18C76 | 281-0916-00 | | | CAP,FXD,CER DI:0.047UF,+/-10%,50V,AXIAL,0.1 20 INCH DIA,CONFORMAL | 04222 | SA115C473KAA |
| A18C77 | 281-0916-00 | | | CAP,FXD,CER DI:0.047UF,+/-10%,50V,AXIAL,0.1 20 INCH DIA,CONFORMAL | 04222 | SA115C473KAA |
| A18C78 | 281-0916-00 | | | CAP,FXD,CER DI:0.047UF,+/-10%,50V,AXIAL,0.1 20 INCH DIA,CONFORMAL | 04222 | SA115C473KAA |
| A18C79 | 281-0916-00 | | | CAP,FXD,CER DI:0.047UF,+/-10%,50V,AXIAL,0.1 20 INCH DIA,CONFORMAL | 04222 | SA115C473KAA |
| A18C80 | 281-0916-00 | | | CAP,FXD,CER DI:0.047UF,+/-10%,50V,AXIAL,0.1 20 INCH DIA,CONFORMAL | 04222 | SA115C473KAA |
| A18C81 | 281-0916-00 | | | CAP,FXD,CER DI:0.047UF,+/-10%,50V,AXIAL,0.1 20 INCH DIA,CONFORMAL | 04222 | SA115C473KAA |
| A18C82 | 281-0916-00 | | | CAP,FXD,CER DI:0.047UF,+/-10%,50V,AXIAL,0.1 20 INCH DIA,CONFORMAL | 04222 | SA115C473KAA |
| A18C83 | 281-0916-00 | | | CAP,FXD,CER DI:0.047UF,+/-10%,50V,AXIAL,0.1 20 INCH DIA,CONFORMAL | 04222 | SA115C473KAA |
| A18C84 | 281-0916-00 | | | CAP,FXD,CER DI:0.047UF,+/-10%,50V,AXIAL,0.1 20 INCH DIA,CONFORMAL | 04222 | SA115C473KAA |
| A18C85 | 281-0916-00 | | | CAP,FXD,CER DI:0.047UF,+/-10%,50V,AXIAL,0.1 20 INCH DIA,CONFORMAL | 04222 | SA115C473KAA |
| A18C86 | 281-0916-00 | | | CAP,FXD,CER DI:0.047UF,+/-10%,50V,AXIAL,0.1 20 INCH DIA,CONFORMAL | 04222 | SA115C473KAA |
| A18C87 | 281-0916-00 | | | CAP,FXD,CER DI:0.047UF,+/-10%,50V,AXIAL,0.1 20 INCH DIA,CONFORMAL | 04222 | SA115C473KAA |
| A18C88 | 281-0916-00 | | | CAP,FXD,CER DI:0.047UF,+/-10%,50V,AXIAL,0.1 20 INCH DIA,CONFORMAL | 04222 | SA115C473KAA |
| A18C89 | 281-0916-00 | | | CAP,FXD,CER DI:0.047UF,+/-10%,50V,AXIAL,0.1 20 INCH DIA,CONFORMAL | 04222 | SA115C473KAA |
| A18C90 | 281-0916-00 | | | CAP,FXD,CER DI:0.047UF,+/-10%,50V,AXIAL,0.1 20 INCH DIA,CONFORMAL | 04222 | SA115C473KAA |
| A18C91 | 281-0916-00 | | | CAP,FXD,CER DI:0.047UF,+/-10%,50V,AXIAL,0.1 20 INCH DIA,CONFORMAL | 04222 | SA115C473KAA |

| Component No. | Tektronix Part No. | Serial/Assembly No. Effective | Dscont | Name & Description | Mfr. Code | Mfr. Part No. |
|---|---|---|---|---|---|---|
| A18C92 | 281-0916-00 | | | CAP,FXD,CER DI:0.047UF,+/-10%,50V,AXIAL,0.1 20 INCH DIA,CONFORMAL | 04222 | SA115C473KAA |
| A18C93 | 281-0916-00 | | | CAP,FXD,CER DI:0.047UF,+/-10%,50V,AXIAL,0.1 20 INCH DIA,CONFORMAL | 04222 | SA115C473KAA |
| A18C94 | 281-0916-00 | | | CAP,FXD,CER DI:0.047UF,+/-10%,50V,AXIAL,0.1 20 INCH DIA,CONFORMAL | 04222 | SA115C473KAA |
| A18C95 | 281-0916-00 | | | CAP,FXD,CER DI:0.047UF,+/-10%,50V,AXIAL,0.1 20 INCH DIA,CONFORMAL | 04222 | SA115C473KAA |
| A18C96 | 281-0916-00 | | | CAP,FXD,CER DI:0.047UF,+/-10%,50V,AXIAL,0.1 20 INCH DIA,CONFORMAL | 04222 | SA115C473KAA |
| A18C97 | 281-0916-00 | | | CAP,FXD,CER DI:0.047UF,+/-10%,50V,AXIAL,0.1 20 INCH DIA,CONFORMAL | 04222 | SA115C473KAA |
| A18C98 | 281-0916-00 | | | CAP,FXD,CER DI:0.047UF,+/-10%,50V,AXIAL,0.1 20 INCH DIA,CONFORMAL | 04222 | SA115C473KAA |
| A18C99 | 281-0916-00 | | | CAP,FXD,CER DI:0.047UF,+/-10%,50V,AXIAL,0.1 20 INCH DIA,CONFORMAL | 04222 | SA115C473KAA |
| A18C100 | 281-0916-00 | | | CAP,FXD,CER DI:0.047UF,+/-10%,50V,AXIAL,0.1 20 INCH DIA,CONFORMAL | 04222 | SA115C473KAA |
| A18C101 | 281-0916-00 | | | CAP,FXD,CER DI:0.047UF,+/-10%,50V,AXIAL,0.1 20 INCH DIA,CONFORMAL | 04222 | SA115C473KAA |
| A18C102 | 281-0916-00 | | | CAP,FXD,CER DI:0.047UF,+/-10%,50V,AXIAL,0.1 20 INCH DIA,CONFORMAL | 04222 | SA115C473KAA |
| A18C103 | 281-0916-00 | | | CAP,FXD,CER DI:0.047UF,+/-10%,50V,AXIAL,0.1 20 INCH DIA,CONFORMAL | 04222 | SA115C473KAA |
| A18C104 | 281-0916-00 | | | CAP,FXD,CER DI:0.047UF,+/-10%,50V,AXIAL,0.1 20 INCH DIA,CONFORMAL | 04222 | SA115C473KAA |
| A18C105 | 281-0916-00 | | | CAP,FXD,CER DI:0.047UF,+/-10%,50V,AXIAL,0.1 20 INCH DIA,CONFORMAL | 04222 | SA115C473KAA |
| A18C107 | 281-0786-00 | | | CAP,FXD,CER DI:150PF,10%,100V | 04222 | SA101A151KAA |
| A18C112 | 281-0916-00 | | | CAP,FXD,CER DI:0.047UF,+/-10%,50V,AXIAL,0.1 20 INCH DIA,CONFORMAL | 04222 | SA115C473KAA |
| A18C113 | 281-0916-00 | | | CAP,FXD,CER DI:0.047UF,+/-10%,50V,AXIAL,0.1 20 INCH DIA,CONFORMAL | 04222 | SA115C473KAA |
| A18C114 | 281-0916-00 | | | CAP,FXD,CER DI:0.047UF,+/-10%,50V,AXIAL,0.1 20 INCH DIA,CONFORMAL | 04222 | SA115C473KAA |
| A18C115 | 281-0916-00 | | | CAP,FXD,CER DI:0.047UF,+/-10%,50V,AXIAL,0.1 20 INCH DIA,CONFORMAL | 04222 | SA115C473KAA |
| A18C116 | 281-0916-00 | | | CAP,FXD,CER DI:0.047UF,+/-10%,50V,AXIAL,0.1 20 INCH DIA,CONFORMAL | 04222 | SA115C473KAA |
| A18C117 | 281-0916-00 | | | CAP,FXD,CER DI:0.047UF,+/-10%,50V,AXIAL,0.1 20 INCH DIA,CONFORMAL | 04222 | SA115C473KAA |
| A18C118 | 281-0916-00 | | | CAP,FXD,CER DI:0.047UF,+/-10%,50V,AXIAL,0.1 20 INCH DIA,CONFORMAL | 04222 | SA115C473KAA |
| A18C119 | 281-0916-00 | | | CAP,FXD,CER DI:0.047UF,+/-10%,50V,AXIAL,0.1 20 INCH DIA,CONFORMAL | 04222 | SA115C473KAA |
| A18C120 | 281-0916-00 | | | CAP,FXD,CER DI:0.047UF,+/-10%,50V,AXIAL,0.1 20 INCH DIA,CONFORMAL | 04222 | SA115C473KAA |
| A18C121 | 281-0916-00 | | | CAP,FXD,CER DI:0.047UF,+/-10%,50V,AXIAL,0.1 20 INCH DIA,CONFORMAL | 04222 | SA115C473KAA |
| A18C122 | 281-0916-00 | | | CAP,FXD,CER DI:0.047UF,+/-10%,50V,AXIAL,0.1 20 INCH DIA,CONFORMAL | 04222 | SA115C473KAA |
| A18C123 | 281-0916-00 | | | CAP,FXD,CER DI:0.047UF,+/-10%,50V,AXIAL,0.1 20 INCH DIA,CONFORMAL | 04222 | SA115C473KAA |
| A18C124 | 281-0916-00 | | | CAP,FXD,CER DI:0.047UF,+/-10%,50V,AXIAL,0.1 20 INCH DIA,CONFORMAL | 04222 | SA115C473KAA |
| A18C125 | 281-0916-00 | | | CAP,FXD,CER DI:0.047UF,+/-10%,50V,AXIAL,0.1 20 INCH DIA,CONFORMAL | 04222 | SA115C473KAA |
| A18C126 | 281-0916-00 | | | CAP,FXD,CER DI:0.047UF,+/-10%,50V,AXIAL,0.1 20 INCH DIA,CONFORMAL | 04222 | SA115C473KAA |

| Component No. | Tektronix Part No. | Serial/Assembly No. Effective | Dscont | Name & Description | Mfr. Code | Mfr. Part No. |
|---|---|---|---|---|---|---|
| A18C127 | 281-0916-00 | | | CAP,FXD,CER DI:0.047UF,+/-10%,50V,AXIAL,0.1 20 INCH DIA,CONFORMAL | 04222 | SA115C473KAA |
| A18C128 | 281-0916-00 | | | CAP,FXD,CER DI:0.047UF,+/-10%,50V,AXIAL,0.1 20 INCH DIA,CONFORMAL | 04222 | SA115C473KAA |
| A18C129 | 281-0916-00 | | | CAP,FXD,CER DI:0.047UF,+/-10%,50V,AXIAL,0.1 20 INCH DIA,CONFORMAL | 04222 | SA115C473KAA |
| A18C130 | 281-0916-00 | | | CAP,FXD,CER DI:0.047UF,+/-10%,50V,AXIAL,0.1 20 INCH DIA,CONFORMAL | 04222 | SA115C473KAA |
| A18C131 | 281-0916-00 | | | CAP,FXD,CER DI:0.047UF,+/-10%,50V,AXIAL,0.1 20 INCH DIA,CONFORMAL | 04222 | SA115C473KAA |
| A18C132 | 281-0916-00 | | | CAP,FXD,CER DI:0.047UF,+/-10%,50V,AXIAL,0.1 20 INCH DIA,CONFORMAL | 04222 | SA115C473KAA |
| A18C133 | 281-0916-00 | | | CAP,FXD,CER DI:0.047UF,+/-10%,50V,AXIAL,0.1 20 INCH DIA,CONFORMAL | 04222 | SA115C473KAA |
| A18C134 | 281-0916-00 | | | CAP,FXD,CER DI:0.047UF,+/-10%,50V,AXIAL,0.1 20 INCH DIA,CONFORMAL | 04222 | SA115C473KAA |
| A18C135 | 281-0916-00 | | | CAP,FXD,CER DI:0.047UF,+/-10%,50V,AXIAL,0.1 20 INCH DIA,CONFORMAL | 04222 | SA115C473KAA |
| A18C136 | 281-0916-00 | | | CAP,FXD,CER DI:0.047UF,+/-10%,50V,AXIAL,0.1 20 INCH DIA,CONFORMAL | 04222 | SA115C473KAA |
| A18C137 | 281-0916-00 | | | CAP,FXD,CER DI:0.047UF,+/-10%,50V,AXIAL,0.1 20 INCH DIA,CONFORMAL | 04222 | SA115C473KAA |
| A18C138 | 281-0916-00 | | | CAP,FXD,CER DI:0.047UF,+/-10%,50V,AXIAL,0.1 20 INCH DIA,CONFORMAL | 04222 | SA115C473KAA |
| A18C139 | 281-0916-00 | | | CAP,FXD,CER DI:0.047UF,+/-10%,50V,AXIAL,0.1 20 INCH DIA,CONFORMAL | 04222 | SA115C473KAA |
| A18C140 | 281-0916-00 | | | CAP,FXD,CER DI:0.047UF,+/-10%,50V,AXIAL,0.1 20 INCH DIA,CONFORMAL | 04222 | SA115C473KAA |
| A18C141 | 281-0916-00 | | | CAP,FXD,CER DI:0.047UF,+/-10%,50V,AXIAL,0.1 20 INCH DIA,CONFORMAL | 04222 | SA115C473KAA |
| A18C142 | 281-0786-00 | | | CAP,FXD,CER DI:150PF,10%,100V | 04222 | SA101A151KAA |
| A18C143 | 281-0765-00 | | | CAP,FXD,CER DI:100PF,5%,100V | 04222 | SA102A101JAA |
| A18C144 | 283-1037-00 | | | CAP,FXD,CERAMIC:MLC;0.1UF,10%,50V,Z5V,0.745 X 0.745;FOR USE UNDER ASICS,LEADED,BULK | 80009 | 283-1037-00 |
| A18C145 | 281-0765-00 | | | CAP,FXD,CER DI:100PF,5%,100V | 04222 | SA102A101JAA |
| A18C146 | 283-1037-00 | | | CAP,FXD,CERAMIC:MLC;0.1UF,10%,50V,Z5V,0.745 X 0.745;FOR USE UNDER ASICS,LEADED,BULK | 80009 | 283-1037-00 |
| A18C147 | 281-0786-00 | | | CAP,FXD,CER DI:150PF,10%,100V | 04222 | SA101A151KAA |
| A18C148 | 281-0765-00 | | | CAP,FXD,CER DI:100PF,5%,100V | 04222 | SA102A101JAA |
| A18C149 | 281-0775-01 | | | CAP,FXD,CER DI:0.1UF,20%,50V | 04222 | SA105E104MAA |
| A18C150 | 281-0775-01 | | | CAP,FXD,CER DI:0.1UF,20%,50V | 04222 | SA105E104MAA |
| A18DL62 | 119-4103-00 | | | DELAY LINE,ELEC:ACTIVE,22.5NS W/10 TAPS,2.5 NS EACH,TTL,14 PIN DIP | 80009 | 119-4103-00 |
| A18F1 | 159-0193-00 | | | FUSE,WIRE LEAD:10A,125V,5 SEC | 61857 | SP5-10A |
| A18J1 | 131-4048-00 | | | CONN,HDR: | 80009 | 131-4048-00 |
| A18J2 | 131-4048-00 | | | CONN,HDR: | 80009 | 131-4048-00 |
| A18J3 | 131-4048-00 | | | CONN,HDR: | 80009 | 131-4048-00 |
| A18J4 | 131-4049-00 | | | CONN,HDR:: | 80009 | 131-4049-00 |
| A18J5 | 131-3517-00 | | | CONN,DIN:PCB,;FEMALE,RTANG,3 X 50,0.1 CTR,0 .504 MLG X 0.118 TAIL,30 GOLD;,, *MOUNTING PARTS* | 80009 | 131-3517-00 |
| | 210-0001-00 | | | WASHER,LOCK:#2 INTL,0.013 THK,STL (QUANTITY 2) | 77900 | 1202-00-00-0541C |
| | 210-0405-00 | | | NUT,PLAIN,HEX:2-56 X 0.188,BRS CD PL (QUANTITY 2) | 73743 | 12157-50 |
| | 211-0185-00 | | | SCREW,MACHINE:2-56 X 0.438,PNH,STL (QUANTITY 2) *END MOUNTING PARTS* | TK0435 | ORDER BY DESCR |
| A18L63 | 108-0733-00 | | | COIL,RF:FIXED,117NH | 80009 | 108-0733-00 |
| A18L64 | 108-0212-00 | | | COIL,RF:FIXED,495NH | 80009 | 108-0212-00 |

| Component No. | Tektronix Part No. | Serial/Assembly No. Effective | Dscont | Name & Description | Mfr. Code | Mfr. Part No. |
|---|---|---|---|---|---|---|
| A18L65 | 108-0212-00 | | | COIL,RF:FIXED,495NH | 80009 | 108-0212-00 |
| A18R1 | 307-0650-00 | | | RES NTWK,FXD,FI:9,2.7K OHM,5%,0.150W | 11236 | 750-101-R2.7K |
| A18R2 | 307-0650-00 | | | RES NTWK,FXD,FI:9,2.7K OHM,5%,0.150W | 11236 | 750-101-R2.7K |
| A18R3 | 307-0650-00 | | | RES NTWK,FXD,FI:9,2.7K OHM,5%,0.150W | 11236 | 750-101-R2.7K |
| A18R4 | 307-0650-00 | | | RES NTWK,FXD,FI:9,2.7K OHM,5%,0.150W | 11236 | 750-101-R2.7K |
| A18R8 | 322-3097-00 | | | RES,FXD:METAL FILM;100 OHM,1%,0.2W,TC=100 P PM;AXIAL,T&R,SMALL BODY | 57668 | CRB20 FXE 100E |
| A18R9 | 322-3097-00 | | | RES,FXD:METAL FILM;100 OHM,1%,0.2W,TC=100 P PM;AXIAL,T&R,SMALL BODY | 57668 | CRB20 FXE 100E |
| A18R10 | 322-3097-00 | | | RES,FXD:METAL FILM;100 OHM,1%,0.2W,TC=100 P PM;AXIAL,T&R,SMALL BODY | 57668 | CRB20 FXE 100E |
| A18R11 | 322-3162-00 | | | RES,FXD:METAL FILM;475 OHM,1%,0.2W,TC=100 P PM;AXIAL,T&R,SMALL BODY | 80009 | 322-3162-00 |
| A18R12 | 307-0717-00 | | | RES NTWK,FXD,FI:4,100 OHM,2%,0.3W EACH | 80009 | 307-0717-00 |
| A18R13 | 307-0717-00 | | | RES NTWK,FXD,FI:4,100 OHM,2%,0.3W EACH | 80009 | 307-0717-00 |
| A18R14 | 307-0717-00 | | | RES NTWK,FXD,FI:4,100 OHM,2%,0.3W EACH | 80009 | 307-0717-00 |
| A18R15 | 322-3169-00 | | | RES,FXD:METAL FILM;562 OHM,1%,0.2W,TC=100 P PM;AXIAL,T&R,SMALL BODY | 91637 | CCF50-2F562R0F |
| A18R16 | 322-3169-00 | | | RES,FXD:METAL FILM;562 OHM,1%,0.2W,TC=100 P PM;AXIAL,T&R,SMALL BODY | 91637 | CCF50-2F562R0F |
| A18R17 | 322-3169-00 | | | RES,FXD:METAL FILM;562 OHM,1%,0.2W,TC=100 P PM;AXIAL,T&R,SMALL BODY | 91637 | CCF50-2F562R0F |
| A18R18 | 307-0650-00 | | | RES NTWK,FXD,FI:9,2.7K OHM,5%,0.150W | 11236 | 750-101-R2.7K |
| A18R19 | 307-1187-00 | | | RES NTWK,FXD,FI:33 OHM,2%,1.25W | 80009 | 307-1187-00 |
| A18R20 | 307-1187-00 | | | RES NTWK,FXD,FI:33 OHM,2%,1.25W | 80009 | 307-1187-00 |
| A18R21 | 307-1187-00 | | | RES NTWK,FXD,FI:33 OHM,2%,1.25W | 80009 | 307-1187-00 |
| A18R22 | 322-3097-00 | | | RES,FXD:METAL FILM;100 OHM,1%,0.2W,TC=100 P PM;AXIAL,T&R,SMALL BODY | 57668 | CRB20 FXE 100E |
| A18R23 | 322-3097-00 | | | RES,FXD:METAL FILM;100 OHM,1%,0.2W,TC=100 P PM;AXIAL,T&R,SMALL BODY | 57668 | CRB20 FXE 100E |
| A18R25 | 322-3289-00 | | | RES,FXD:METAL FILM;10K OHM,1%,0.2W,TC=100 P PM;AXIAL,T&R,SMALL BODY | 80009 | 322-3289-00 |
| A18R26 | 322-3169-00 | | | RES,FXD:METAL FILM;562 OHM,1%,0.2W,TC=100 P PM;AXIAL,T&R,SMALL BODY | 91637 | CCF50-2F562R0F |
| A18R27 | 322-3169-00 | | | RES,FXD:METAL FILM;562 OHM,1%,0.2W,TC=100 P PM;AXIAL,T&R,SMALL BODY | 91637 | CCF50-2F562R0F |
| A18R28 | 307-0650-00 | | | RES NTWK,FXD,FI:9,2.7K OHM,5%,0.150W | 11236 | 750-101-R2.7K |
| A18R29 | 307-0650-00 | | | RES NTWK,FXD,FI:9,2.7K OHM,5%,0.150W | 11236 | 750-101-R2.7K |
| A18R30 | 307-0650-00 | | | RES NTWK,FXD,FI:9,2.7K OHM,5%,0.150W | 11236 | 750-101-R2.7K |
| A18R31 | 307-0650-00 | | | RES NTWK,FXD,FI:9,2.7K OHM,5%,0.150W | 11236 | 750-101-R2.7K |
| A18R32 | 307-0675-00 | | | RES NTWK,FXD,FI:(9),1K OHM,2%,1.25W | 11236 | 750-101-R1K OHM |
| A18R33 | 307-1187-00 | | | RES NTWK,FXD,FI:33 OHM,2%,1.25W | 80009 | 307-1187-00 |
| A18R34 | 307-1187-00 | | | RES NTWK,FXD,FI:33 OHM,2%,1.25W | 80009 | 307-1187-00 |
| A18R36 | 307-1187-00 | | | RES NTWK,FXD,FI:33 OHM,2%,1.25W | 80009 | 307-1187-00 |
| A18R37 | 307-1187-00 | | | RES NTWK,FXD,FI:33 OHM,2%,1.25W | 80009 | 307-1187-00 |
| A18R38 | 307-0650-00 | | | RES NTWK,FXD,FI:9,2.7K OHM,5%,0.150W | 11236 | 750-101-R2.7K |
| A18R39 | 307-0650-00 | | | RES NTWK,FXD,FI:9,2.7K OHM,5%,0.150W | 11236 | 750-101-R2.7K |
| A18R40 | 307-0650-00 | | | RES NTWK,FXD,FI:9,2.7K OHM,5%,0.150W | 11236 | 750-101-R2.7K |
| A18R41 | 307-0650-00 | | | RES NTWK,FXD,FI:9,2.7K OHM,5%,0.150W | 11236 | 750-101-R2.7K |
| A18R43 | 322-3193-00 | | | RES,FXD:METAL FILM;1K OHM,1%,0.2W,TC=100 PP M;AXIAL,T&R,SMALL BODY | 57668 | CRB20 FXE 1K00 |
| A18R45 | 322-3097-00 | | | RES,FXD:METAL FILM;100 OHM,1%,0.2W,TC=100 P PM;AXIAL,T&R,SMALL BODY | 57668 | CRB20 FXE 100E |
| A18R47 | 322-3097-00 | | | RES,FXD:METAL FILM;100 OHM,1%,0.2W,TC=100 P PM;AXIAL,T&R,SMALL BODY | 57668 | CRB20 FXE 100E |
| A18R48 | 322-3047-00 | | | RES,FXD,FILM:30.1 OHM,1%,0.2W,TC=T0 | 57668 | CRB20FXE16K5 |
| A18R49 | 322-3097-00 | | | RES,FXD:METAL FILM;100 OHM,1%,0.2W,TC=100 P PM;AXIAL,T&R,SMALL BODY | 57668 | CRB20 FXE 100E |

| Component No. | Tektronix Part No. | Serial/Assembly No. Effective | Dscont | Name & Description | Mfr. Code | Mfr. Part No. |
|---|---|---|---|---|---|---|
| A18R50 | 322-3030-00 | 671-1991-00 | 671-1991-04 | RES,FXD:METAL FILM;20 OHM,1%,0.2W,TC=100 PPM;AXIAL,T&R,SMALL BODY | 80009 | 322-3030-00 |
| A18R51 | 322-3162-00 | 671-1991-00 | 671-1991-04 | RES,FXD:METAL FILM;475 OHM,1%,0.2W,TC=100 PPM;AXIAL,T&R,SMALL BODY | 80009 | 322-3162-00 |
| A18R52 | 322-3047-00 | | | RES,FXD,FILM:30.1 OHM,1%,0.2W,TC=TO | 57668 | CRB20FXE16K5 |
| A18R53 | 322-3105-00 | | | RES,FXD:METAL FILM;121 OHM,1%,0.2W,TC=100 PPM;AXIAL,T&R,SMALL BODY | 80009 | 322-3105-00 |
| A18R54 | 307-1187-00 | | | RES NTWK,FXD,FI:33 OHM,2%,1.25W | 80009 | 307-1187-00 |
| A18R55 | 307-1187-00 | | | RES NTWK,FXD,FI:33 OHM,2%,1.25W | 80009 | 307-1187-00 |
| A18R56 | 307-0828-00 | | | RES NTWK,FXD,FI:4,33 OHM,2%,0.30W | 32997 | 4308R-102-330 |
| A18R57 | 307-0828-00 | | | RES NTWK,FXD,FI:4,33 OHM,2%,0.30W | 32997 | 4308R-102-330 |
| A18R58 | 307-1187-00 | | | RES NTWK,FXD,FI:33 OHM,2%,1.25W | 80009 | 307-1187-00 |
| A18R59 | 307-1187-00 | | | RES NTWK,FXD,FI:33 OHM,2%,1.25W | 80009 | 307-1187-00 |
| A18R60 | 322-3105-00 | 671-1991-00 | 671-1991-00 | RES,FXD:METAL FILM;121 OHM,1%,0.2W,TC=100 PPM;AXIAL,T&R,SMALL BODY | 80009 | 322-3105-00 |
| A18R60 | 322-3085-00 | 671-1991-01 | 671-1991-04 | RES,FXD:METAL FILM;75 OHM,1%,0.2W,TC=100 PPM;AXIAL,T&R,SMALL BODY | 57668 | CRB20 FXE 75E0 |
| A18R60 | 322-3097-00 | 671-1991-05 | | RES,FXD:METAL FILM;100 OHM,1%,0.2W,TC=100 PPM;AXIAL,T&R,SMALL BODY | 57668 | CRB20 FXE 100E |
| A18R61 | 322-3097-00 | | | RES,FXD:METAL FILM;100 OHM,1%,0.2W,TC=100 PPM;AXIAL,T&R,SMALL BODY | 57668 | CRB20 FXE 100E |
| A18R62 | 322-3051-00 | | | RES,FXD:METAL FILM;33.2 OHM,1%,0.2W,TC=100 PPM;AXIAL,T&R,SMALL BODY | 57668 | CRB20FXE301K |
| A18R64 | 322-3085-00 | 671-1911-03 | | RES,FXD:METAL FILM;75 OHM,1%,0.2W,TC=100 PPM;AXIAL,T&R,SMALL BODY | 57668 | CRB20 FXE 75E0 |
| A18RC1 | 307-1585-00 | | | RES NTWK,FXD,FI:TERMINATION NETWORK,8,50 OHM RESISTORS AND 8 ,220PF | 80009 | 307-1585-00 |
| A18RC2 | 307-1586-00 | | | RES NTWK,FXD,FI:TERMINATION NETWORK,10,50 OHM RESISTORS AND 10 220PF | 80009 | 307-1586-00 |
| A18RC3 | 307-1585-00 | | | RES NTWK,FXD,FI:TERMINATION NETWORK,8,50 OHM RESISTORS AND 8 ,220PF | 80009 | 307-1585-00 |
| A18RC4 | 307-1586-00 | | | RES NTWK,FXD,FI:TERMINATION NETWORK,10,50 OHM RESISTORS AND 10 220PF | 80009 | 307-1586-00 |
| A18TP1 | 214-4085-00 | | | TERM,TEST POINT:0.070 ID,0.220 H,0.063 DIA PCB,0.015 X 0.032 BRASS,W/ RED NYLON COLLAR | 26364 | 104-01-02 |
| A18TP2 | 214-4085-00 | | | TERM,TEST POINT:0.070 ID,0.220 H,0.063 DIA PCB,0.015 X 0.032 BRASS,W/ RED NYLON COLLAR | 26364 | 104-01-02 |
| A18TP3 | 214-4085-00 | | | TERM,TEST POINT:0.070 ID,0.220 H,0.063 DIA PCB,0.015 X 0.032 BRASS,W/ RED NYLON COLLAR | 26364 | 104-01-02 |
| A18TP4 | 214-4085-00 | | | TERM,TEST POINT:0.070 ID,0.220 H,0.063 DIA PCB,0.015 X 0.032 BRASS,W/ RED NYLON COLLAR | 26364 | 104-01-02 |
| A18TP5 | 214-4085-00 | | | TERM,TEST POINT:0.070 ID,0.220 H,0.063 DIA PCB,0.015 X 0.032 BRASS,W/ RED NYLON COLLAR | 26364 | 104-01-02 |
| A18TP6 | 214-4085-00 | | | TERM,TEST POINT:0.070 ID,0.220 H,0.063 DIA PCB,0.015 X 0.032 BRASS,W/ RED NYLON COLLAR | 26364 | 104-01-02 |
| A18TP7 | 214-4085-00 | | | TERM,TEST POINT:0.070 ID,0.220 H,0.063 DIA PCB,0.015 X 0.032 BRASS,W/ RED NYLON COLLAR | 26364 | 104-01-02 |
| A18U1 | 156-1748-02 | | | IC,DIGITAL:ALSTTL,TRANSCEIVER;OCTAL NONINV, 3-STATE;74ALS245,DIP20.3,TUBE | 01295 | SN74ALS245AN3 |
| A18U2 | 156-1748-02 | | | IC,DIGITAL:ALSTTL,TRANSCEIVER;OCTAL NONINV, 3-STATE;74ALS245,DIP20.3,TUBE | 01295 | SN74ALS245AN3 |
| A18U3 | 156-1748-02 | | | IC,DIGITAL:ALSTTL,TRANSCEIVER;OCTAL NONINV, 3-STATE;74ALS245,DIP20.3,TUBE | 01295 | SN74ALS245AN3 |
| A18U4 | 156-1748-02 | | | IC,DIGITAL:ALSTTL,TRANSCEIVER;OCTAL NONINV, 3-STATE;74ALS245,DIP20.3,TUBE | 01295 | SN74ALS245AN3 |
| A18U5 | 156-3888-00 | | | IC,DIGITAL:FTTL,BUFFER/DRIVER;10-BIT, NONINV, 3-STATE;74F827,DIP24.3,TUBE | 80009 | 156-3888-00 |
| A18U6 | 156-3237-00 | | | IC,PROCESSOR:CMOS,PERIPHERAL;PROGRAMMABLE INTERVAL TIMER;82C54-2,DIP24.6 | 80009 | 156-3237-00 |

| Component No. | Tektronix Part No. | Serial/Assembly No. Effective | Dscont | Name & Description | Mfr. Code | Mfr. Part No. |
|---|---|---|---|---|---|---|
| A18U7 | 156-2773-00 | 671-1911-00 | 671-1911-01 | IC,PROCESSOR:CMOS,PERIPHERAL;PROGRAMMABLE INTERVAL TIMER,8MHZ;82C54,DIP24.6 | 80009 | 156-2773-00 |
| A18U7 | 156-3237-00 | 671-1911-02 | | IC,PROCESSOR:CMOS,PERIPHERAL;PROGRAMMABLE INTERVAL TIMER;82C54-2,DIP24.6 | 80009 | 156-3237-00 |
| A18U8 | 156-4066-00 | | | IC,ASIC:CMOS,GATE ARRAY;VM700A CONTROLLER GLUE LOGIC;L1A6110,PPGA144 | 80009 | 156-4066-00 |
| | | | | *MOUNTING PARTS* | | |
| | 136-0906-00 | | | SOCKET,PGA: | 80009 | 136-0906-00 |
| | | | | *END MOUNTING PARTS* | | |
| A18U9 | 156-2290-00 | | | IC,DIGITAL:ECL,TRANSLATOR;QUAD ECL-TO-TTL;10H125,DIP16.3,TUBE | 80009 | 156-2290-00 |
| A18U10 | 156-2290-00 | | | IC,DIGITAL:ECL,TRANSLATOR;QUAD ECL-TO-TTL;10H125,DIP16.3,TUBE | 80009 | 156-2290-00 |
| A18U11 | 156-2114-00 | | | IC,DIGITAL:ECL,RECEIVER;QUAD LINE;10H115,DIP16.3,TUBE | 80009 | 156-2114-00 |
| A18U12 | 156-2290-00 | | | IC,DIGITAL:ECL,TRANSLATOR;QUAD ECL-TO-TTL;10H125,DIP16.3,TUBE | 80009 | 156-2290-00 |
| A18U13 | 156-2290-00 | | | IC,DIGITAL:ECL,TRANSLATOR;QUAD ECL-TO-TTL;10H125,DIP16.3,TUBE | 80009 | 156-2290-00 |
| A18U14 | 156-1713-00 | | | IC,DIGITAL:ECL,MULTIVIBRATOR;RETRIG MONOSTABLE;10198,DIP16.3,TUBE | 80009 | 156-1713-00 |
| A18U15 | 156-2953-00 | | | IC,DIGITAL:FTTL,FLIP FLOP;OCTAL NONINV D-TYPE, 3-STATE;74F574,DIP20.3,TUBE | 80009 | 156-2953-00 |
| A18U16 | 156-2953-00 | | | IC,DIGITAL:FTTL,FLIP FLOP;OCTAL NONINV D-TYPE, 3-STATE;74F574,DIP20.3,TUBE | 80009 | 156-2953-00 |
| A18U17 | 156-3461-00 | | | IC,MEMORY:CMOS,SRAM;16K X 4,25NS;,DIP22.3 | 80009 | 156-3461-00 |
| A18U18 | 156-1748-02 | | | IC,DIGITAL:ALSTTL,TRANSCEIVER;OCTAL NONINV, 3-STATE;74ALS245,DIP20.3,TUBE | 01295 | SN74ALS245AN3 |
| A18U19 | 156-2289-00 | | | IC,DIGITAL:ECL,TRANSLATOR;QUAD TTL-TO-ECL;10H124,DIP16.3,TUBE | 04713 | MC10H124P |
| A18U20 | 156-4113-00 | | | IC,DIGITAL:FTTL,REGISTER;10-BIT NINV,3-STATE;74F821,DIP24.3,TUBE | 80009 | 156-4113-00 |
| A18U22 | 156-1748-02 | | | IC,DIGITAL:ALSTTL,TRANSCEIVER;OCTAL NONINV, 3-STATE;74ALS245,DIP20.3,TUBE | 01295 | SN74ALS245AN3 |
| A18U23 | 156-1748-02 | | | IC,DIGITAL:ALSTTL,TRANSCEIVER;OCTAL NONINV, 3-STATE;74ALS245,DIP20.3,TUBE | 01295 | SN74ALS245AN3 |
| A18U24 | 156-1748-02 | | | IC,DIGITAL:ALSTTL,TRANSCEIVER;OCTAL NONINV, 3-STATE;74ALS245,DIP20.3,TUBE | 01295 | SN74ALS245AN3 |
| A18U25 | 156-1748-02 | | | IC,DIGITAL:ALSTTL,TRANSCEIVER;OCTAL NONINV, 3-STATE;74ALS245,DIP20.3,TUBE | 01295 | SN74ALS245AN3 |
| A18U26 | 156-1748-02 | | | IC,DIGITAL:ALSTTL,TRANSCEIVER;OCTAL NONINV, 3-STATE;74ALS245,DIP20.3,TUBE | 01295 | SN74ALS245AN3 |
| A18U27 | 156-3888-00 | | | IC,DIGITAL:FTTL,BUFFER/DRIVER;10-BIT, NONINV, 3-STATE;74F827,DIP24.3,TUBE | 80009 | 156-3888-00 |
| A18U28 | 156-3508-00 | | | IC,DIGITAL:ASTTL,FLIP FLOP;OCTAL D-TYPE, NONINV, CLEAR, 3-STATE;74AS575,DIP24.3 | 80009 | 156-3508-00 |
| A18U29 | 156-3508-00 | | | IC,DIGITAL:ASTTL,FLIP FLOP;OCTAL D-TYPE, NONINV, CLEAR, 3-STATE;74AS575,DIP24.3 | 80009 | 156-3508-00 |
| A18U30 | 156-3461-00 | | | IC,MEMORY:CMOS,SRAM;16K X 4,25NS;,DIP22.3 | 80009 | 156-3461-00 |
| A18U31 | 156-3461-00 | | | IC,MEMORY:CMOS,SRAM;16K X 4,25NS;,DIP22.3 | 80009 | 156-3461-00 |
| A18U32 | 156-3461-00 | | | IC,MEMORY:CMOS,SRAM;16K X 4,25NS;,DIP22.3 | 80009 | 156-3461-00 |
| A18U33 | 156-3461-00 | | | IC,MEMORY:CMOS,SRAM;16K X 4,25NS;,DIP22.3 | 80009 | 156-3461-00 |
| A18U34 | 156-3461-00 | | | IC,MEMORY:CMOS,SRAM;16K X 4,25NS;,DIP22.3 | 80009 | 156-3461-00 |
| A18U35 | 156-3461-00 | | | IC,MEMORY:CMOS,SRAM;16K X 4,25NS;,DIP22.3 | 80009 | 156-3461-00 |
| A18U36 | 156-3461-00 | | | IC,MEMORY:CMOS,SRAM;16K X 4,25NS;,DIP22.3 | 80009 | 156-3461-00 |
| A18U37 | 156-3461-00 | | | IC,MEMORY:CMOS,SRAM;16K X 4,25NS;,DIP22.3 | 80009 | 156-3461-00 |
| A18U38 | 156-3509-00 | | | IC,DIGITAL:FTTL,COUNTER;SYNCH 8-BIT UP/DOWN BINARY, 3-STATE;74F1779,DIP16.3,TUBE | 80009 | 156-3509-00 |

| Component No. | Tektronix Part No. | Serial/Assembly No. Effective | Dscont | Name & Description | Mfr. Code | Mfr. Part No. |
|---|---|---|---|---|---|---|
| A18U39 | 156-3509-00 | | | IC,DIGITAL:FTTL,COUNTER;SYNCH 8-BIT UP/DOWN BINARY, 3-STATE;74F1779,DIP16.3,TUBE | 80009 | 156-3509-00 |
| A18U40 | 156-1722-00 | | | IC,DIGITAL:FTTL,GATE;HEX INV;74F04,DIP14.3, TUBE | 04713 | MC74F04ND |
| A18U41 | 156-2953-00 | | | IC,DIGITAL:FTTL,FLIP FLOP;OCTAL NONINV D-TYPE, 3-STATE;74F574,DIP20.3,TUBE | 80009 | 156-2953-00 |
| A18U42 | 156-2953-00 | | | IC,DIGITAL:FTTL,FLIP FLOP;OCTAL NONINV D-TYPE, 3-STATE;74F574,DIP20.3,TUBE | 80009 | 156-2953-00 |
| A18U43 | 156-2953-00 | | | IC,DIGITAL:FTTL,FLIP FLOP;OCTAL NONINV D-TYPE, 3-STATE;74F574,DIP20.3,TUBE | 80009 | 156-2953-00 |
| A18U44 | 156-2992-00 | | | IC,MEMORY:CMOS,SRAM;2K X 8,35NS,OE;,DIP24.3 | 80009 | 156-2992-00 |
| A18U45 | 156-2992-00 | | | IC,MEMORY:CMOS,SRAM;2K X 8,35NS,OE;,DIP24.3 | 80009 | 156-2992-00 |
| A18U46 | 156-2992-00 | | | IC,MEMORY:CMOS,SRAM;2K X 8,35NS,OE;,DIP24.3 | 80009 | 156-2992-00 |
| A18U47 | 156-2992-00 | | | IC,MEMORY:CMOS,SRAM;2K X 8,35NS,OE;,DIP24.3 | 80009 | 156-2992-00 |
| A18U48 | 156-1748-02 | | | IC,DIGITAL:ALSTTL,TRANSCEIVER;OCTAL NONINV, 3-STATE;74ALS245,DIP20.3,TUBE | 01295 | SN74ALS245AN3 |
| A18U49 | 156-1748-02 | | | IC,DIGITAL:ALSTTL,TRANSCEIVER;OCTAL NONINV, 3-STATE;74ALS245,DIP20.3,TUBE | 01295 | SN74ALS245AN3 |
| A18U50 | 156-1748-02 | | | IC,DIGITAL:ALSTTL,TRANSCEIVER;OCTAL NONINV, 3-STATE;74ALS245,DIP20.3,TUBE | 01295 | SN74ALS245AN3 |
| A18U51 | 156-1748-02 | | | IC,DIGITAL:ALSTTL,TRANSCEIVER;OCTAL NONINV, 3-STATE;74ALS245,DIP20.3,TUBE | 01295 | SN74ALS245AN3 |
| A18U52 | 156-2953-00 | | | IC,DIGITAL:FTTL,FLIP FLOP;OCTAL NONINV D-TYPE, 3-STATE;74F574,DIP20.3,TUBE | 80009 | 156-2953-00 |
| A18U53 | 156-2953-00 | | | IC,DIGITAL:FTTL,FLIP FLOP;OCTAL NONINV D-TYPE, 3-STATE;74F574,DIP20.3,TUBE | 80009 | 156-2953-00 |
| A18U54 | 156-2953-00 | | | IC,DIGITAL:FTTL,FLIP FLOP;OCTAL NONINV D-TYPE, 3-STATE;74F574,DIP20.3,TUBE | 80009 | 156-2953-00 |
| A18U55 | 156-2953-00 | | | IC,DIGITAL:FTTL,FLIP FLOP;OCTAL NONINV D-TYPE, 3-STATE;74F574,DIP20.3,TUBE | 80009 | 156-2953-00 |
| A18U56 | 160-5109-00 | | | MICROCKT,DGTL:HEX 16 INP RGTR AND/OR,PRGM *MOUNTING PARTS* | 80009 | 160-5109-00 |
| | 136-0752-00 | | | SKT,PL-IN ELEK:MICROCIRCUIT,20 DIP *END MOUNTING PARTS* | 09922 | DILB20P-108 |
| A18U57 | 156-3888-00 | | | IC,DIGITAL:FTTL,BUFFER/DRIVER;10-BIT, NONINV, 3-STATE;74F827,DIP24.3,TUBE | 80009 | 156-3888-00 |
| A18U58 | 156-4063-00 | | | IC,ASIC:CMOS,GATE ARRAY;VM700A ACQUISTION 1C;L1A6297,PPGA144 *MOUNTING PARTS* | 80009 | 156-4063-00 |
| | 136-0906-00 | | | SOCKET,PGA: *END MOUNTING PARTS* | 80009 | 136-0906-00 |
| A18U59 | 156-4064-00 | | | IC,ASIC:CMOS,GATE ARRAY;DUAL PORT REGISTER FILE;L1A5804,PLCC68 *MOUNTING PARTS* | 80009 | 156-4064-00 |
| | 136-1058-00 | | | SKT,PL-IN ELEK:PLCC,68 POS,0.152 TAIL,GOLD, FOR AMP CERAMIC PKG ONLY *END MOUNTING PARTS* | 80009 | 136-1058-00 |
| A18U60 | 156-4065-00 | | | IC,ASIC:CMOS,GATE ARRAY;VM700A FIFO CONTROLLER;L1A5083,DIP24.3 | 80009 | 156-4065-00 |
| A18U61 | 156-3741-01 | | | IC,ASIC:CMOS,GATE ARRAY;SYNCHRONOUS CUMUMATIVE 10-BIT MIN-MAX STORE,VM700A;,DIP40.6 | 80009 | 156-3741-01 |
| A18U63 | 160-8189-00 | | | IC,DIGITAL:CMOS,PLD;EEPLD,PRGM 156-3211-00, 16V8,15NS,90MA;16V8,DIP20.3 *MOUNTING PARTS* | 80009 | 160-8189-00 |
| | 136-0752-00 | | | SKT,PL-IN ELEK:MICROCIRCUIT,20 DIP *END MOUNTING PARTS* | 09922 | DILB20P-108 |
| A18U64 | 156-4068-00 | | | IC,DIGITAL:FCTCMOS,TRANSCEIVER;OCTAL REGISTERED;74FCT652AT,DIP24.3 | 80009 | 156-4068-00 |
| A18U65 | 156-4068-00 | | | IC,DIGITAL:FCTCMOS,TRANSCEIVER;OCTAL REGISTERED;74FCT652AT,DIP24.3 | 80009 | 156-4068-00 |

| Component No. | Tektronix Part No. | Serial/Assembly No. Effective | Dscont | Name & Description | Mfr. Code | Mfr. Part No. |
|---|---|---|---|---|---|---|
| A18U66 | 156-4068-00 | | | IC,DIGITAL:FCTCMOS,TRANSCEIVER;OCTAL REGISTERED;74FCT652AT,DIP24.3 | 80009 | 156-4068-00 |
| A18U67 | 156-4068-00 | | | IC,DIGITAL:FCTCMOS,TRANSCEIVER;OCTAL REGISTERED;74FCT652AT,DIP24.3 | 80009 | 156-4068-00 |
| A18U68 | 156-3668-00 | | | IC,DIGITAL:FCTCMOS,LATCH;10-BIT BUS INTERFACE, D-TYPE, 3-STATE;74FCT841B,DIP24.3 | 61772 | 74FCT841BP |
| A18U69 | 156-3668-00 | | | IC,DIGITAL:FCTCMOS,LATCH;10-BIT BUS INTERFACE, D-TYPE, 3-STATE;74FCT841B,DIP24.3 | 61772 | 74FCT841BP |
| A18U70 | 156-4064-00 | | | IC,ASIC:CMOS,GATE ARRAY;DUAL PORT REGISTER FILE;LIA5804,PLCC68 | 80009 | 156-4064-00 |
| | | | | *MOUNTING PARTS* | | |
| | 136-1058-00 | | | SKT,PL-IN ELEK:PLCC,68 POS,0.152 TAIL,GOLD, FOR AMP CERAMIC PKG ONLY | 80009 | 136-1058-00 |
| | | | | *END MOUNTING PARTS* | | |
| A18U71 | 156-4070-00 | 671-1991-00 | 671-1991-03 | IC,MEMORY:BICMOS,SRAM;64K X 4,25NS;6708,DIP24.3 | 80009 | 156-4070-00 |
| A18U71 | 156-4350-00 | 671-1991-04 | | IC, MEMORY:CMOS,SRAM;64K X 4,20NS;5258-20,DIP24.3 | 80009 | 156-4350-00 |
| A18U72 | 156-4070-00 | 671-1991-00 | 671-1991-03 | IC,MEMORY:BICMOS,SRAM;64K X 4,25NS;6708,DIP24.3 | 80009 | 156-4070-00 |
| A18U72 | 156-4350-00 | 671-1991-04 | | IC, MEMORY:CMOS,SRAM;64K X 4,20NS;5258-20,DIP24.3 | 80009 | 156-4350-00 |
| A18U73 | 156-4070-00 | 671-1991-00 | 671-1991-03 | IC,MEMORY:BICMOS,SRAM;64K X 4,25NS;6708,DIP24.3 | 80009 | 156-4070-00 |
| A18U73 | 156-4350-00 | 671-1991-04 | | IC, MEMORY:CMOS,SRAM;64K X 4,20NS;5258-20,DIP24.3 | 80009 | 156-4350-00 |
| A18U74 | 156-4070-00 | 671-1991-00 | 671-1991-03 | IC,MEMORY:BICMOS,SRAM;64K X 4,25NS;6708,DIP24.3 | 80009 | 156-4070-00 |
| A18U74 | 156-4350-00 | 671-1991-04 | | IC, MEMORY:CMOS,SRAM;64K X 4,20NS;5258-20,DIP24.3 | 80009 | 156-4350-00 |
| A18U75 | 156-4070-00 | 671-1991-00 | 671-1991-03 | IC,MEMORY:BICMOS,SRAM;64K X 4,25NS;6708,DIP24.3 | 80009 | 156-4070-00 |
| A18U75 | 156-4350-00 | 671-1991-04 | | IC, MEMORY:CMOS,SRAM;64K X 4,20NS;5258-20,DIP24.3 | 80009 | 156-4350-00 |
| A18U76 | 156-4070-00 | 671-1991-00 | 671-1991-03 | IC,MEMORY:BICMOS,SRAM;64K X 4,25NS;6708,DIP24.3 | 80009 | 156-4070-00 |
| A18U76 | 156-4350-00 | 671-1991-04 | | IC, MEMORY:CMOS,SRAM;64K X 4,20NS;5258-20,DIP24.3 | 80009 | 156-4350-00 |
| A18U77 | 156-4070-00 | 671-1991-00 | 671-1991-03 | IC,MEMORY:BICMOS,SRAM;64K X 4,25NS;6708,DIP24.3 | 80009 | 156-4070-00 |
| A18U77 | 156-4350-00 | 671-1991-04 | | IC, MEMORY:CMOS,SRAM;64K X 4,20NS;5258-20,DIP24.3 | 80009 | 156-4350-00 |
| A18U78 | 156-4070-00 | 671-1991-00 | 671-1991-03 | IC,MEMORY:BICMOS,SRAM;64K X 4,25NS;6708,DIP24.3 | 80009 | 156-4070-00 |
| A18U78 | 156-4350-00 | 671-1991-04 | | IC, MEMORY:CMOS,SRAM;64K X 4,20NS;5258-20,DIP24.3 | 80009 | 156-4350-00 |
| A18U79 | 156-4070-00 | 671-1991-00 | 671-1991-03 | IC,MEMORY:BICMOS,SRAM;64K X 4,25NS;6708,DIP24.3 | 80009 | 156-4070-00 |
| A18U79 | 156-4350-00 | 671-1991-04 | | IC, MEMORY:CMOS,SRAM;64K X 4,20NS;5258-20,DIP24.3 | 80009 | 156-4350-00 |
| A18U80 | 156-4070-00 | 671-1991-00 | 671-1991-03 | IC,MEMORY:BICMOS,SRAM;64K X 4,25NS;6708,DIP24.3 | 80009 | 156-4070-00 |
| A18U80 | 156-4350-00 | 671-1991-04 | | IC, MEMORY:CMOS,SRAM;64K X 4,20NS;5258-20,DIP24.3 | 80009 | 156-4350-00 |
| A18U81 | 156-4070-00 | 671-1991-00 | 671-1991-03 | IC,MEMORY:BICMOS,SRAM;64K X 4,25NS;6708,DIP24.3 | 80009 | 156-4070-00 |
| A18U81 | 156-4350-00 | 671-1991-04 | | IC, MEMORY:CMOS,SRAM;64K X 4,20NS;5258-20,DIP24.3 | 80009 | 156-4350-00 |
| A18U82 | 156-4070-00 | 671-1991-00 | 671-1991-03 | IC,MEMORY:BICMOS,SRAM;64K X 4,25NS;6708,DIP24.3 | 80009 | 156-4070-00 |

| Component No. | Tektronix Part No. | Serial/Assembly No. Effective | Dscont | Name & Description | Mfr. Code | Mfr. Part No. |
|---|---|---|---|---|---|---|
| A18U82 | 156-4350-00 | 671-1991-04 | | IC, MEMORY:CMOS,SRAM;64K X 4,20NS;5258-20,D IP24.3 | 80009 | 156-4350-00 |
| A18U83 | 156-4070-00 | 671-1991-00 | 671-1991-03 | IC,MEMORY:BICMOS,SRAM;64K X 4,25NS;6708,DIP 24.3 | 80009 | 156-4070-00 |
| A18U83 | 156-4350-00 | 671-1991-04 | | IC, MEMORY:CMOS,SRAM;64K X 4,20NS;5258-20,D IP24.3 | 80009 | 156-4350-00 |
| A18U84 | 156-4070-00 | 671-1991-00 | 671-1991-03 | IC,MEMORY:BICMOS,SRAM;64K X 4,25NS;6708,DIP 24.3 | 80009 | 156-4070-00 |
| A18U84 | 156-4350-00 | 671-1991-04 | | IC, MEMORY:CMOS,SRAM;64K X 4,20NS;5258-20,D IP24.3 | 80009 | 156-4350-00 |
| A18U85 | 156-4070-00 | 671-1991-00 | 671-1991-03 | IC,MEMORY:BICMOS,SRAM;64K X 4,25NS;6708,DIP 24.3 | 80009 | 156-4070-00 |
| A18U85 | 156-4350-00 | 671-1991-04 | | IC, MEMORY:CMOS,SRAM;64K X 4,20NS;5258-20,D IP24.3 | 80009 | 156-4350-00 |
| A18U86 | 156-4070-00 | 671-1991-00 | 671-1991-03 | IC,MEMORY:BICMOS,SRAM;64K X 4,25NS;6708,DIP 24.3 | 80009 | 156-4070-00 |
| A18U86 | 156-4350-00 | 671-1991-04 | | IC, MEMORY:CMOS,SRAM;64K X 4,20NS;5258-20,D IP24.3 | 80009 | 156-4350-00 |
| A18U87 | 156-1727-00 | | | MICROCKT,DGTL:1 OF 8 DCDR/DEMULTIPLEXER | 04713 | MC74F138 N |
| A18U88 | 156-0645-02 | | | IC,DIGITAL:LSTTL,GATES;DUPLICATE OF 156-064 5-00;74LS14,DIP14.3,TUBE | 80009 | 156-0645-02 |
| A18U89 | 156-4341-00 | | | IC,DIGITAL:BICMOS,BUFFER/DRIVER;DUAL,3STATE ;64BCT306,DIP08.3 | 80009 | 156-4341-00 |
| A18Y1 | 119-1413-00 | 671-1991-00 | 671-1991-03 | OSC,XTAL CLOCK:20.0MHZ, +/-0.05 %, TTL, 4 P IN 14 PIN DIP COMPATIBLE | 14301 | AE 404-417 |
| A18Y1 | 119-1408-00 | 671-1991-04 | | OSC,XTAL CLOCK:16MHZ,0.01%,TTL,4 PIN 14 PIN DIP COMPATIBLE | 80009 | 119-1408-00 |

| Component No. | Tektronix Part No. | Serial/Assembly No. Effective | Dscont | Name & Description | Mfr. Code | Mfr. Part No. |
|---|---|---|---|---|---|---|
| A19 | 671-2337-00 | | | CIRCUIT BD ASSY:GPIB | 80009 | 671-2337-00 |
| | | | | *ATTACHED PARTS* | | |
| | 105-0160-00 | | | EJECTOR,CKT BD:WHITE PLASTIC | 80009 | 105-0160-00 |
| | 211-0244-00 | | | SCR,ASSEM WSHR:4-40 X 0.312,PNH STL (QUANTITY 4) | TK0858 | 211-0244-00 |
| | 214-1337-00 | | | PIN,SPRING:0.25 L X 0.103 OD,STL CD PL | 000BK | ORDER BY DESCR |
| | 220-0098-00 | | | NUT BLOCK:4-40 THRU,ALUMINUM (QUANTITY 2) | 80009 | 220-0098-00 |
| | 337-3892-00 | | | SHIELD,ELEC:BE CU,CLIP ON,1 X 60 (QUANTITY 2) | 80009 | 337-3892-00 |
| | 386-6232-00 | | | PANEL,GPIB:VM700A | 80009 | 386-6232-00 |
| | | | | *END ATTACHED PARTS* | | |
| A19C100 | 290-0932-00 | | | CAP,FXD,ELCTLT:390UF,+100-10%,15VDC | 80009 | 290-0932-00 |
| A19C103 | 281-0775-01 | | | CAP,FXD,CER DI:0.1UF,20%,50V | 04222 | SA105E104MAA |
| A19C104 | 281-0775-01 | | | CAP,FXD,CER DI:0.1UF,20%,50V | 04222 | SA105E104MAA |
| A19C105 | 281-0775-01 | | | CAP,FXD,CER DI:0.1UF,20%,50V | 04222 | SA105E104MAA |
| A19C106 | 281-0775-01 | | | CAP,FXD,CER DI:0.1UF,20%,50V | 04222 | SA105E104MAA |
| A19C107 | 281-0775-01 | | | CAP,FXD,CER DI:0.1UF,20%,50V | 04222 | SA105E104MAA |
| A19C109 | 281-0775-01 | | | CAP,FXD,CER DI:0.1UF,20%,50V | 04222 | SA105E104MAA |
| A19C110 | 281-0775-01 | | | CAP,FXD,CER DI:0.1UF,20%,50V | 04222 | SA105E104MAA |
| A19C111 | 281-0775-01 | | | CAP,FXD,CER DI:0.1UF,20%,50V | 04222 | SA105E104MAA |
| A19C112 | 281-0775-01 | | | CAP,FXD,CER DI:0.1UF,20%,50V | 04222 | SA105E104MAA |
| A19C113 | 281-0775-01 | | | CAP,FXD,CER DI:0.1UF,20%,50V | 04222 | SA105E104MAA |
| A19C114 | 281-0775-01 | | | CAP,FXD,CER DI:0.1UF,20%,50V | 04222 | SA105E104MAA |
| A19C116 | 281-0814-00 | | | CAP,FXD,CER DI:100 PF,10%,100V | 80009 | 281-0814-00 |
| A19C117 | 281-0814-00 | | | CAP,FXD,CER DI:100 PF,10%,100V | 80009 | 281-0814-00 |
| A19C120 | 281-0775-01 | | | CAP,FXD,CER DI:0.1UF,20%,50V | 04222 | SA105E104MAA |
| A19C121 | 281-0775-01 | | | CAP,FXD,CER DI:0.1UF,20%,50V | 04222 | SA105E104MAA |
| A19C128 | 281-0775-01 | | | CAP,FXD,CER DI:0.1UF,20%,50V | 04222 | SA105E104MAA |
| A19C129 | 281-0775-01 | | | CAP,FXD,CER DI:0.1UF,20%,50V | 04222 | SA105E104MAA |
| A19C130 | 281-0775-01 | | | CAP,FXD,CER DI:0.1UF,20%,50V | 04222 | SA105E104MAA |
| A19C131 | 281-0775-01 | | | CAP,FXD,CER DI:0.1UF,20%,50V | 04222 | SA105E104MAA |
| A19C132 | 281-0775-01 | | | CAP,FXD,CER DI:0.1UF,20%,50V | 04222 | SA105E104MAA |
| A19C133 | 283-0339-01 | | | CAP,FXD,CERAMIC:MLC;0.22UF,10%,50V,X7R,0.30 0 X 0.300;RADIAL,T&A, | 80009 | 283-0339-01 |
| A19C134 | 283-0339-01 | | | CAP,FXD,CERAMIC:MLC;0.22UF,10%,50V,X7R,0.30 0 X 0.300;RADIAL,T&A, | 80009 | 283-0339-01 |
| A19C135 | 281-0775-01 | | | CAP,FXD,CER DI:0.1UF,20%,50V | 04222 | SA105E104MAA |
| A19C137 | 281-0775-01 | | | CAP,FXD,CER DI:0.1UF,20%,50V | 04222 | SA105E104MAA |
| A19C138 | 281-0775-01 | | | CAP,FXD,CER DI:0.1UF,20%,50V | 04222 | SA105E104MAA |
| A19C139 | 281-0775-01 | | | CAP,FXD,CER DI:0.1UF,20%,50V | 04222 | SA105E104MAA |
| A19C140 | 281-0775-01 | | | CAP,FXD,CER DI:0.1UF,20%,50V | 04222 | SA105E104MAA |
| A19C141 | 281-0775-01 | | | CAP,FXD,CER DI:0.1UF,20%,50V | 04222 | SA105E104MAA |
| A19C145 | 281-0775-01 | | | CAP,FXD,CER DI:0.1UF,20%,50V | 04222 | SA105E104MAA |
| A19C148 | 283-0339-01 | | | CAP,FXD,CERAMIC:MLC;0.22UF,10%,50V,X7R,0.30 0 X 0.300;RADIAL,T&A, | 80009 | 283-0339-01 |
| A19C149 | 283-0339-01 | | | CAP,FXD,CERAMIC:MLC;0.22UF,10%,50V,X7R,0.30 0 X 0.300;RADIAL,T&A, | 80009 | 283-0339-01 |
| A19C150 | 283-0339-01 | | | CAP,FXD,CERAMIC:MLC;0.22UF,10%,50V,X7R,0.30 0 X 0.300;RADIAL,T&A, | 80009 | 283-0339-01 |
| A19C151 | 283-0339-01 | | | CAP,FXD,CERAMIC:MLC;0.22UF,10%,50V,X7R,0.30 0 X 0.300;RADIAL,T&A, | 80009 | 283-0339-01 |
| A19C152 | 283-0339-01 | | | CAP,FXD,CERAMIC:MLC;0.22UF,10%,50V,X7R,0.30 0 X 0.300;RADIAL,T&A, | 80009 | 283-0339-01 |
| A19C153 | 283-0339-01 | | | CAP,FXD,CERAMIC:MLC;0.22UF,10%,50V,X7R,0.30 0 X 0.300;RADIAL,T&A, | 80009 | 283-0339-01 |
| A19C154 | 283-0339-01 | | | CAP,FXD,CERAMIC:MLC;0.22UF,10%,50V,X7R,0.30 0 X 0.300;RADIAL,T&A, | 80009 | 283-0339-01 |
| A19C155 | 283-0339-01 | | | CAP,FXD,CERAMIC:MLC;0.22UF,10%,50V,X7R,0.30 0 X 0.300;RADIAL,T&A, | 80009 | 283-0339-01 |

| Component No. | Tektronix Part No. | Serial/Assembly No. Effective | Dscont | Name & Description | Mfr. Code | Mfr. Part No. |
|---|---|---|---|---|---|---|
| A19C160 | 281-0775-01 | | | CAP,FXD,CER DI:0.1UF,20%,50V | 04222 | SA105E104MAA |
| A19C161 | 281-0775-01 | | | CAP,FXD,CER DI:0.1UF,20%,50V | 04222 | SA105E104MAA |
| A19C162 | 281-0775-01 | | | CAP,FXD,CER DI:0.1UF,20%,50V | 04222 | SA105E104MAA |
| A19C163 | 281-0775-01 | | | CAP,FXD,CER DI:0.1UF,20%,50V | 04222 | SA105E104MAA |
| A19C164 | 281-0775-01 | | | CAP,FXD,CER DI:0.1UF,20%,50V | 04222 | SA105E104MAA |
| A19C167 | 281-0775-01 | | | CAP,FXD,CER DI:0.1UF,20%,50V | 04222 | SA105E104MAA |
| A19C168 | 281-0775-01 | | | CAP,FXD,CER DI:0.1UF,20%,50V | 04222 | SA105E104MAA |
| A19C169 | 281-0775-01 | | | CAP,FXD,CER DI:0.1UF,20%,50V | 04222 | SA105E104MAA |
| A19C170 | 281-0775-01 | | | CAP,FXD,CER DI:0.1UF,20%,50V | 04222 | SA105E104MAA |
| A19C171 | 281-0775-01 | | | CAP,FXD,CER DI:0.1UF,20%,50V | 04222 | SA105E104MAA |
| A19C174 | 281-0775-01 | | | CAP,FXD,CER DI:0.1UF,20%,50V | 04222 | SA105E104MAA |
| A19C175 | 281-0775-01 | | | CAP,FXD,CER DI:0.1UF,20%,50V | 04222 | SA105E104MAA |
| A19C178 | 281-0775-01 | | | CAP,FXD,CER DI:0.1UF,20%,50V | 04222 | SA105E104MAA |
| A19C214 | 281-0814-00 | | | CAP,FXD,CER DI:100 PF,10%,100V | 80009 | 281-0814-00 |
| A19C215 | 281-0814-00 | | | CAP,FXD,CER DI:100 PF,10%,100V | 80009 | 281-0814-00 |
| A19C216 | 281-0814-00 | | | CAP,FXD,CER DI:100 PF,10%,100V | 80009 | 281-0814-00 |
| A19C220 | 281-0775-01 | | | CAP,FXD,CER DI:0.1UF,20%,50V | 04222 | SA105E104MAA |
| A19C221 | 281-0775-01 | | | CAP,FXD,CER DI:0.1UF,20%,50V | 04222 | SA105E104MAA |
| A19C222 | 281-0775-01 | | | CAP,FXD,CER DI:0.1UF,20%,50V | 04222 | SA105E104MAA |
| A19C223 | 281-0775-01 | | | CAP,FXD,CER DI:0.1UF,20%,50V | 04222 | SA105E104MAA |
| A19C224 | 281-0775-01 | | | CAP,FXD,CER DI:0.1UF,20%,50V | 04222 | SA105E104MAA |
| A19C509 | 283-0339-01 | | | CAP,FXD,CERAMIC:MLC;0.22UF,10%,50V,X7R,0.30 0 X 0.300;RADIAL,T&A, | 80009 | 283-0339-01 |
| A19C510 | 283-0339-01 | | | CAP,FXD,CERAMIC:MLC;0.22UF,10%,50V,X7R,0.30 0 X 0.300;RADIAL,T&A, | 80009 | 283-0339-01 |
| A19C511 | 283-0339-01 | | | CAP,FXD,CERAMIC:MLC;0.22UF,10%,50V,X7R,0.30 0 X 0.300;RADIAL,T&A, | 80009 | 283-0339-01 |
| A19C512 | 283-0339-01 | | | CAP,FXD,CERAMIC:MLC;0.22UF,10%,50V,X7R,0.30 0 X 0.300;RADIAL,T&A, | 80009 | 283-0339-01 |
| A19C515 | 283-0339-01 | | | CAP,FXD,CERAMIC:MLC;0.22UF,10%,50V,X7R,0.30 0 X 0.300;RADIAL,T&A, | 80009 | 283-0339-01 |
| A19C516 | 283-0339-01 | | | CAP,FXD,CERAMIC:MLC;0.22UF,10%,50V,X7R,0.30 0 X 0.300;RADIAL,T&A, | 80009 | 283-0339-01 |
| A19C517 | 283-0339-01 | | | CAP,FXD,CERAMIC:MLC;0.22UF,10%,50V,X7R,0.30 0 X 0.300;RADIAL,T&A, | 80009 | 283-0339-01 |
| A19C518 | 283-0339-01 | | | CAP,FXD,CERAMIC:MLC;0.22UF,10%,50V,X7R,0.30 0 X 0.300;RADIAL,T&A, | 80009 | 283-0339-01 |
| A19C522 | 281-0775-01 | | | CAP,FXD,CER DI:0.1UF,20%,50V | 04222 | SA105E104MAA |
| A19C523 | 283-0198-00 | | | CAP,FXD,CER DI:0.22UF,20%,50V | 05397 | C330C224M5U1CA |
| A19C524 | 283-0339-01 | | | CAP,FXD,CERAMIC:MLC;0.22UF,10%,50V,X7R,0.30 0 X 0.300;RADIAL,T&A, | 80009 | 283-0339-01 |
| A19C601 | 281-0775-01 | | | CAP,FXD,CER DI:0.1UF,20%,50V | 04222 | SA105E104MAA |
| A19C602 | 283-0198-00 | | | CAP,FXD,CER DI:0.22UF,20%,50V | 05397 | C330C224M5U1CA |
| A19C603 | 283-0339-01 | | | CAP,FXD,CERAMIC:MLC;0.22UF,10%,50V,X7R,0.30 0 X 0.300;RADIAL,T&A, | 80009 | 283-0339-01 |
| A19C604 | 283-0339-01 | | | CAP,FXD,CERAMIC:MLC;0.22UF,10%,50V,X7R,0.30 0 X 0.300;RADIAL,T&A, | 80009 | 283-0339-01 |
| A19C605 | 283-0339-01 | | | CAP,FXD,CERAMIC:MLC;0.22UF,10%,50V,X7R,0.30 0 X 0.300;RADIAL,T&A, | 80009 | 283-0339-01 |
| A19C606 | 283-0198-00 | | | CAP,FXD,CER DI:0.22UF,20%,50V | 05397 | C330C224M5U1CA |
| A19C607 | 283-0339-01 | | | CAP,FXD,CERAMIC:MLC;0.22UF,10%,50V,X7R,0.30 0 X 0.300;RADIAL,T&A, | 80009 | 283-0339-01 |
| A19C608 | 283-0159-02 | | | CAP,FXD,CER DI:18PF,5%,50V | 54583 | FK16C0G1H180J-T |
| A19C609 | 283-0260-01 | | | CAP,FXD,CER DI:5.6PF,+/- 0.25PF,200V | 80009 | 283-0260-01 |
| A19C610 | 281-0775-01 | | | CAP,FXD,CER DI:0.1UF,20%,50V | 04222 | SA105E104MAA |
| A19C611 | 281-0775-01 | | | CAP,FXD,CER DI:0.1UF,20%,50V | 04222 | SA105E104MAA |
| A19C612 | 281-0775-01 | | | CAP,FXD,CER DI:0.1UF,20%,50V | 04222 | SA105E104MAA |
| A19CR100 | 152-0322-00 | | | DIODE,SIG:SCHTKY,;15V,410MVF AT 1MA,1.2PF;5082-2811,T&R | 80009 | 152-0322-00 |

| Component No. | Tektronix Part No. | Serial/Assembly No. Effective | Dscont | Name & Description | Mfr. Code | Mfr. Part No. |
|---|---|---|---|---|---|---|
| A19CR101 | 152-0322-00 | | | DIODE,SIG:SCHTKY,;15V,410MVF AT 1MA,1.2PF;5082-2811,T&R | 80009 | 152-0322-00 |
| A19DS101 | 150-1120-00 | | | DIODE,OPTO:,LED;AMBER,583NM,8MCD AT 20MA,T1 3/4 IN RIGHT ANGLE HOUSING;PCL200-BA | 15513 | PCL200-BA |
| A19DS102 | 150-1090-00 | | | LT EMITTING DIO:RED,660NM,30MA | 15513 | SP850211 |
| A19DS103 | 150-1111-00 | | | LT EMITTING DIO:GREEN,D565NM,35MA | 15513 | PCL200-MG |
| A19DS104 | 150-1111-00 | | | LT EMITTING DIO:GREEN,D565NM,35MA | 15513 | PCL200-MG |
| A19DS105 | 150-1120-00 | | | DIODE,OPTO:,LED;AMBER,583NM,8MCD AT 20MA,T1 3/4 IN RIGHT ANGLE HOUSING;PCL200-BA | 15513 | PCL200-BA |
| A19DS106 | 150-1111-00 | | | LT EMITTING DIO:GREEN,D565NM,35MA | 15513 | PCL200-MG |
| A19DS107 | 150-1111-00 | | | LT EMITTING DIO:GREEN,D565NM,35MA | 15513 | PCL200-MG |
| A19F100 | 159-0193-00 | | | FUSE,WIRE LEAD:10A,125V,5 SEC | 61857 | SP5-10A |
| A19FL100 | 119-4472-00 | | | FILTER,RF: | 80009 | 119-4472-00 |
| A19FL101 | 119-4472-00 | | | FILTER,RF: | 80009 | 119-4472-00 |
| A19FL102 | 119-4472-00 | | | FILTER,RF: | 80009 | 119-4472-00 |
| A19FL103 | 119-4472-00 | | | FILTER,RF: | 80009 | 119-4472-00 |
| A19J100 | 131-3517-00 | | | CONN,DIN:PCB,;FEMALE,RTANG,3 X 50,0.1 CTR,0.504 MLG X 0.118 TAIL,30 GOLD;,, | 80009 | 131-3517-00 |
| A19J101 | 131-0608-00 | | | TERMINAL,PIN:0.365 L X 0.025 BRZ GLD PL (QUANTITY 2) | 80009 | 131-0608-00 |
| A19J103 | 131-3410-00 | | | CONN,RIBBON: | 80009 | 131-3410-00 |
| | | | | *MOUNTING PARTS* | | |
| | 129-0887-02 | | | SPACER,POST:0.531 L,M3.5 X 0.6 INT/6-32 EXT,STL,0.312 HEX (QUANTITY 2) | 29587 | 57-1912-01 |
| | 211-0504-00 | | | SCREW,MACHINE:6-32 X 0.250,PNH,STL (QUANTITY 2) | TK0435 | ORDER BY DESCR |
| | | | | *END MOUNTING PARTS* | | |
| A19J602 | 131-0608-00 | | | TERMINAL,PIN:0.365,L X 0.025 BRZ GLD PL (QUANTITY 2) | 80009 | 131-0608-00 |
| A19R100 | 322-3147-00 | | | RES,FXD:METAL FILM;332 OHM,1%,0.2W,TC=100 PPM;AXIAL,T&R,SMALL BODY | 80009 | 322-3147-00 |
| A19R102 | 307-0741-00 | | | RES NTWK,FXD,FI:7,3.3K OHM,2%,0.19W EACH | 80009 | 307-0741-00 |
| A19R103 | 322-3258-00 | | | RES,FXD:METAL FILM;4.75K OHM,1%,0.2W,TC=100 PPM;AXIAL,T&R,SMALL BODY | 80009 | 322-3258-00 |
| A19R111 | 307-0717-00 | | | RES NTWK,FXD,FI:4,100 OHM,2%,0.3W EACH | 80009 | 307-0717-00 |
| A19R112 | 307-0841-00 | | | RES NTWK,FXD,FI:(4)10 OHM,10%,0.3W | 91637 | CSC08A-03-100G |
| A19R114 | 307-0637-00 | | | RES NTWK,FXD,FI:5,2K OHM,2%,0.125W | 01121 | 206A202 |
| A19R120 | 307-0445-00 | | | RES,NTWK:THICK FILM;(9) 4.7K OHM,2%,0.2W EACH,TC=100 PPM;SIP10,PIN 1 COMMON | 91637 | MSP10A01472GD03 |
| A19R121 | 307-0445-00 | | | RES,NTWK:THICK FILM;(9) 4.7K OHM,2%,0.2W EACH,TC=100 PPM;SIP10,PIN 1 COMMON | 91637 | MSP10A01472GD03 |
| A19R122 | 307-0445-00 | | | RES,NTWK:THICK FILM;(9) 4.7K OHM,2%,0.2W EACH,TC=100 PPM;SIP10,PIN 1 COMMON | 91637 | MSP10A01472GD03 |
| A19R123 | 307-0445-00 | | | RES,NTWK:THICK FILM;(9) 4.7K OHM,2%,0.2W EACH,TC=100 PPM;SIP10,PIN 1 COMMON | 91637 | MSP10A01472GD03 |
| A19R126 | 307-0446-00 | | | RES NTWK,FXD,FI:10K OHM,20%,(9)RES | 80009 | 307-0446-00 |
| A19R127 | 307-0446-00 | | | RES NTWK,FXD,FI:10K OHM,20%,(9)RES | 80009 | 307-0446-00 |
| A19R128 | 307-0446-00 | | | RES NTWK,FXD,FI:10K OHM,20%,(9)RES | 80009 | 307-0446-00 |
| A19R129 | 307-0446-00 | | | RES NTWK,FXD,FI:10K OHM,20%,(9)RES | 80009 | 307-0446-00 |
| A19R132 | 307-0717-00 | | | RES NTWK,FXD,FI:4,100 OHM,2%,0.3W EACH | 80009 | 307-0717-00 |
| A19R136 | 307-0828-00 | | | RES NTWK,FXD,FI:4,33 OHM,2%,0.30W | 32997 | 4308R-102-330 |
| A19R137 | 307-0446-00 | | | RES NTWK,FXD,FI:10K OHM,20%,(9)RES | 80009 | 307-0446-00 |
| A19R138 | 307-0637-00 | | | RES NTWK,FXD,FI:5,2K OHM,2%,0.125W | 01121 | 206A202 |
| A19R141 | 322-3250-00 | | | RES,FXD:METAL FILM;3.92K OHM,1%,0.2W,TC=100 PPM;AXIAL,T&R,SMALL BODY | 91637 | CCF50-2F39200F |
| A19R142 | 322-3250-00 | | | RES,FXD:METAL FILM;3.92K OHM,1%,0.2W,TC=100 PPM;AXIAL,T&R,SMALL BODY | 91637 | CCF50-2F39200F |
| A19R168 | 307-0717-00 | | | RES NTWK,FXD,FI:4,100 OHM,2%,0.3W EACH | 80009 | 307-0717-00 |
| A19R183 | 307-0637-00 | | | RES NTWK,FXD,FI:5,2K OHM,2%,0.125W | 01121 | 206A202 |

| Component No. | Tektronix Part No. | Serial/Assembly No. Effective | Dscont | Name & Description | Mfr. Code | Mfr. Part No. |
|---|---|---|---|---|---|---|
| A19R184 | 307-0824-00 | | | RES NTWK,FXD,FI:4,150 OHM,2%,0.3W EACH | 91637 | CSC08A-03-151G |
| A19R186 | 307-0611-00 | | | RES NTWK,FXD,FI:7,150 OHM,5%,1.125 W | 80009 | 307-0611-00 |
| A19R187 | 307-0446-00 | | | RES NTWK,FXD,FI:10K OHM,20%,(9)RES | 80009 | 307-0446-00 |
| A19R188 | 307-0446-00 | | | RES NTWK,FXD,FI:10K OHM,20%,(9)RES | 80009 | 307-0446-00 |
| A19R189 | 307-0717-00 | | | RES NTWK,FXD,FI:4,100 OHM,2%,0.3W EACH | 80009 | 307-0717-00 |
| A19R502 | 307-0717-00 | | | RES NTWK,FXD,FI:4,100 OHM,2%,0.3W EACH | 80009 | 307-0717-00 |
| A19R503 | 307-0717-00 | | | RES NTWK,FXD,FI:4,100 OHM,2%,0.3W EACH | 80009 | 307-0717-00 |
| A19R504 | 307-0717-00 | | | RES NTWK,FXD,FI:4,100 OHM,2%,0.3W EACH | 80009 | 307-0717-00 |
| A19R505 | 307-0717-00 | | | RES NTWK,FXD,FI:4,100 OHM,2%,0.3W EACH | 80009 | 307-0717-00 |
| A19R506 | 307-0717-00 | | | RES NTWK,FXD,FI:4,100 OHM,2%,0.3W EACH | 80009 | 307-0717-00 |
| A19R507 | 307-0717-00 | | | RES NTWK,FXD,FI:4,100 OHM,2%,0.3W EACH | 80009 | 307-0717-00 |
| A19R508 | 307-0717-00 | | | RES NTWK,FXD,FI:4,100 OHM,2%,0.3W EACH | 80009 | 307-0717-00 |
| A19R509 | 307-0717-00 | | | RES NTWK,FXD,FI:4,100 OHM,2%,0.3W EACH | 80009 | 307-0717-00 |
| A19R510 | 307-0717-00 | | | RES NTWK,FXD,FI:4,100 OHM,2%,0.3W EACH | 80009 | 307-0717-00 |
| A19R511 | 307-0717-00 | | | RES NTWK,FXD,FI:4,100 OHM,2%,0.3W EACH | 80009 | 307-0717-00 |
| A19R512 | 307-0828-00 | | | RES NTWK,FXD,FI:4,33 OHM,2%,0.30W | 32997 | 4308R-102-330 |
| A19R513 | 307-0828-00 | | | RES NTWK,FXD,FI:4,33 OHM,2%,0.30W | 32997 | 4308R-102-330 |
| A19R514 | 307-0828-00 | | | RES NTWK,FXD,FI:4,33 OHM,2%,0.30W | 32997 | 4308R-102-330 |
| A19R515 | 307-0828-00 | | | RES NTWK,FXD,FI:4,33 OHM,2%,0.30W | 32997 | 4308R-102-330 |
| A19R516 | 307-0828-00 | | | RES NTWK,FXD,FI:4,33 OHM,2%,0.30W | 32997 | 4308R-102-330 |
| A19R517 | 307-0828-00 | | | RES NTWK,FXD,FI:4,33 OHM,2%,0.30W | 32997 | 4308R-102-330 |
| A19R518 | 307-0828-00 | | | RES NTWK,FXD,FI:4,33 OHM,2%,0.30W | 32997 | 4308R-102-330 |
| A19R519 | 307-0828-00 | | | RES NTWK,FXD,FI:4,33 OHM,2%,0.30W | 32997 | 4308R-102-330 |
| A19R520 | 307-0828-00 | | | RES NTWK,FXD,FI:4,33 OHM,2%,0.30W | 32997 | 4308R-102-330 |
| A19R521 | 307-0828-00 | | | RES NTWK,FXD,FI:4,33 OHM,2%,0.30W | 32997 | 4308R-102-330 |
| A19R522 | 307-0717-00 | | | RES NTWK,FXD,FI:4,100 OHM,2%,0.3W EACH | 80009 | 307-0717-00 |
| A19R523 | 307-0717-00 | | | RES NTWK,FXD,FI:4,100 OHM,2%,0.3W EACH | 80009 | 307-0717-00 |
| A19R535 | 307-0717-00 | | | RES NTWK,FXD,FI:4,100 OHM,2%,0.3W EACH | 80009 | 307-0717-00 |
| A19R536 | 307-0717-00 | | | RES NTWK,FXD,FI:4,100 OHM,2%,0.3W EACH | 80009 | 307-0717-00 |
| A19R539 | 322-3097-00 | | | RES,FXD:METAL FILM;100 OHM,1%,0.2W,TC=100 PPM;AXIAL,T&R,SMALL BODY | 57668 | CRB20 FXE 100E |
| A19R540 | 307-1482-00 | | | RES NTWK,FXD,FI:7,4.7K,SIP | 80009 | 307-1482-00 |
| A19R544 | 322-3114-00 | | | RES,FXD:METAL FILM;150 OHM,1%,0.2W,TC=100 PPM;AXIAL,T&R,SMALL BODY | 91637 | CCF50-2-G1500F |
| A19R545 | 322-3114-00 | | | RES,FXD:METAL FILM;150 OHM,1%,0.2W,TC=100 PPM;AXIAL,T&R,SMALL BODY | 91637 | CCF50-2-G1500F |
| A19R601 | 307-0717-00 | | | RES NTWK,FXD,FI:4,100 OHM,2%,0.3W EACH | 80009 | 307-0717-00 |
| A19R602 | 322-3193-00 | | | RES,FXD:METAL FILM;1K OHM,1%,0.2W,TC=100 PPM;AXIAL,T&R,SMALL BODY | 57668 | CRB20 FXE 1K00 |
| A19R603 | 307-0717-00 | | | RES NTWK,FXD,FI:4,100 OHM,2%,0.3W EACH | 80009 | 307-0717-00 |
| A19R604 | 307-0717-00 | | | RES NTWK,FXD,FI:4,100 OHM,2%,0.3W EACH | 80009 | 307-0717-00 |
| A19R605 | 322-3193-00 | | | RES,FXD:METAL FILM;1K OHM,1%,0.2W,TC=100 PPM;AXIAL,T&R,SMALL BODY | 57668 | CRB20 FXE 1K00 |
| A19R606 | 322-3193-00 | | | RES,FXD:METAL FILM;1K OHM,1%,0.2W,TC=100 PPM;AXIAL,T&R,SMALL BODY | 57668 | CRB20 FXE 1K00 |
| A19R607 | 322-3193-00 | | | RES,FXD:METAL FILM;1K OHM,1%,0.2W,TC=100 PPM;AXIAL,T&R,SMALL BODY | 57668 | CRB20 FXE 1K00 |
| A19R608 | 307-0741-00 | | | RES NTWK,FXD,FI:7,3.3K OHM,2%,0.19W EACH | 80009 | 307-0741-00 |
| A19R609 | 322-3001-00 | | | RES,FXD:METAL FILM;10 OHM,1%,0.2W,TC=100 PPM;AXIAL,T&R,SMALL BODY | 80009 | 322-3001-00 |
| A19R610 | 322-3051-00 | | | RES,FXD:METAL FILM;33.2 OHM,1%,0.2W,TC=100 PPM;AXIAL,T&R,SMALL BODY | 57668 | CRB20FXE301K |
| A19R611 | 322-3051-00 | | | RES,FXD:METAL FILM;33.2 OHM,1%,0.2W,TC=100 PPM;AXIAL,T&R,SMALL BODY | 57668 | CRB20FXE301K |
| A19R612 | 322-3097-00 | | | RES,FXD:METAL FILM;100 OHM,1%,0.2W,TC=100 PPM;AXIAL,T&R,SMALL BODY | 57668 | CRB20 FXE 100E |
| A19R613 | 307-0741-00 | | | RES NTWK,FXD,FI:7,3.3K OHM,2%,0.19W EACH | 80009 | 307-0741-00 |
| A19R614 | 307-0651-00 | | | RES NTWK,FXD,FI:5,3.3K OHM,5%,0.150W | 80009 | 307-0651-00 |

| Component No. | Tektronix Part No. | Serial/Assembly No. Effective | Dscont | Name & Description | Mfr. Code | Mfr. Part No. |
|---|---|---|---|---|---|---|
| A19RC100 | 307-1587-00 | | | RES NTWK,FXD,FI:TERMINATION NETWORK,8 100 O HM RESISTORS AND 8 220PF | 80009 | 307-1587-00 |
| A19RC101 | 307-1585-00 | | | RES NTWK,FXD,FI:TERMINATION NETWORK,8,50 OH M RESISTORS AND 8 ,220PF | 80009 | 307-1585-00 |
| A19RC102 | 307-1586-00 | | | RES NTWK,FXD,FI:TERMINATION NETWORK,10,50 O HM RESISTORS AND 10 220PF | 80009 | 307-1586-00 |
| A19RC103 | 307-1587-00 | | | RES NTWK,FXD,FI:TERMINATION NETWORK,8 100 O HM RESISTORS AND 8 220PF | 80009 | 307-1587-00 |
| A19RC104 | 307-1587-00 | | | RES NTWK,FXD,FI:TERMINATION NETWORK,8 100 O HM RESISTORS AND 8 220PF | 80009 | 307-1587-00 |
| A19RC105 | 307-1587-00 | | | RES NTWK,FXD,FI:TERMINATION NETWORK,8 100 O HM RESISTORS AND 8 220PF | 80009 | 307-1587-00 |
| A19RC501 | 307-1588-00 | | | RES NTWK,FXD FI: | 91637 | |
| A19RC502 | 307-1588-00 | | | RES NTWK,FXD FI: | 91637 | |
| A19S100 | 260-1589-00 | | | SWITCH,ROCKER:(6)SPST,125MA,30VDC | 81073 | 76SB06S |
| A19TP100 | 214-4085-00 | | | TERM,TEST POINT:0.070 ID,0.220 H,0.063 DIA PCB,0.015 X 0.032 BRASS,W/ RED NYLON COLLAR | 26364 | 104-01-02 |
| A19TP101 | 214-4085-00 | | | TERM,TEST POINT:0.070 ID,0.220 H,0.063 DIA PCB,0.015 X 0.032 BRASS,W/ RED NYLON COLLAR | 26364 | 104-01-02 |
| A19TP102 | 214-4085-00 | | | TERM,TEST POINT:0.070 ID,0.220 H,0.063 DIA PCB,0.015 X 0.032 BRASS,W/ RED NYLON COLLAR | 26364 | 104-01-02 |
| A19TP103 | 214-4085-00 | | | TERM,TEST POINT:0.070 ID,0.220 H,0.063 DIA PCB,0.015 X 0.032 BRASS,W/ RED NYLON COLLAR | 26364 | 104-01-02 |
| A19U100 | 156-0441-00 | | | IC,DIGITAL:FTTL,COMPARATOR;8-BIT IDENTITY, /P=/Q, STANDARD;74F521,DIP20.3,TUBE | 80009 | 156-0441-00 |
| | | | | *MOUNTING PARTS* | | |
| | 136-0752-00 | | | SKT,PL-IN ELEK:MICROCIRCUIT,20 DIP | 09922 | DILB20P-108 |
| | | | | *END MOUNTING PARTS* | | |
| A19U102 | 156-3062-00 | | | IC,DIGITAL:HCMOS,GATE;QUAD 2-INPUT NAND,SCH MITT TRIGGER;74HC132, DIP14.3,TUBE | 01295 | SN 74HC132N |
| A19U103 | 156-2864-00 | | | IC,DIGITAL:FTTL,BUFFER;OCTAL, BUFFER/DRIVER , 3-STATE;74F541,DIP20.3,TUBE | 80009 | 156-2864-00 |
| | | | | *MOUNTING PARTS* | | |
| | 136-0752-00 | | | SKT,PL-IN ELEK:MICROCIRCUIT,20 DIP | 09922 | DILB20P-108 |
| | | | | *END MOUNTING PARTS* | | |
| A19U104 | 156-2864-00 | | | IC,DIGITAL:FTTL,BUFFER;OCTAL, BUFFER/DRIVER , 3-STATE;74F541,DIP20.3,TUBE | 80009 | 156-2864-00 |
| | | | | *MOUNTING PARTS* | | |
| | 136-0752-00 | | | SKT,PL-IN ELEK:MICROCIRCUIT,20 DIP | 09922 | DILB20P-108 |
| | | | | *END MOUNTING PARTS* | | |
| A19U105 | 156-2864-00 | | | IC,DIGITAL:FTTL,BUFFER;OCTAL, BUFFER/DRIVER , 3-STATE;74F541,DIP20.3,TUBE | 80009 | 156-2864-00 |
| | | | | *MOUNTING PARTS* | | |
| | 136-0752-00 | | | SKT,PL-IN ELEK:MICROCIRCUIT,20 DIP | 09922 | DILB20P-108 |
| | | | | *END MOUNTING PARTS* | | |
| A19U106 | 156-2864-00 | | | IC,DIGITAL:FTTL,BUFFER;OCTAL, BUFFER/DRIVER , 3-STATE;74F541,DIP20.3,TUBE | 80009 | 156-2864-00 |
| | | | | *MOUNTING PARTS* | | |
| | 136-0752-00 | | | SKT,PL-IN ELEK:MICROCIRCUIT,20 DIP | 09922 | DILB20P-108 |
| | | | | *END MOUNTING PARTS* | | |
| A19U107 | 156-2391-00 | | | IC,DIGITAL:ALSTTL,BUFFER/DRIVER;OCTAL NONIN V, 3-STATE;74ALS541,DIP20.3,TUBE | 80009 | 156-2391-00 |
| A19U108 | 156-2391-00 | | | IC,DIGITAL:ALSTTL,BUFFER/DRIVER;OCTAL NONIN V, 3-STATE;74ALS541,DIP20.3,TUBE | 80009 | 156-2391-00 |
| A19U109 | 156-2391-00 | | | IC,DIGITAL:ALSTTL,BUFFER/DRIVER;OCTAL NONIN V, 3-STATE;74ALS541,DIP20.3,TUBE | 80009 | 156-2391-00 |
| A19U110 | 160-9288-00 | | | IC,DIGITAL:STTL,PLD;PAL,20L8,PRGM 156-1803-00,25NS,210MA,20L8A,DIP24.3,TUBE | 80009 | 160-9288-00 |
| | | | | *MOUNTING PARTS* | | |
| | 136-0925-00 | | | SOCKET,DIP:: | 91506 | 224-AG30D |
| | | | | *END MOUNTING PARTS* | | |

| Component No. | Tektronix Part No. | Serial/Assembly No. Effective | Dscont | Name & Description | Mfr. Code | Mfr. Part No. |
|---|---|---|---|---|---|---|
| A19U111 | 160-9276-00 | | | IC,DIGITAL:STTL,PLD;PAL,16L8,PRGM 156-2124-00,15NS,180MA,16L8B,DIP20.3,TUBE | 80009 | 160-9276-00 |
| | | | | *MOUNTING PARTS* | | |
| | 136-0752-00 | | | SKT,PL-IN ELEK:MICROCIRCUIT,20 DIP | 09922 | DILB20P-108 |
| | | | | *END MOUNTING PARTS* | | |
| A19U113 | 156-2377-00 | | | IC,DIGITAL:ASTTL,MUX;QUAD 2-TO-1 DATA SELECTOR, 3-STATE;74AS257,DIP16.3,TUBE | 80009 | 156-2377-00 |
| | | | | *MOUNTING PARTS* | | |
| | 136-0729-00 | | | SOCKET,DIP:PCB,;FEMALE,STR,2 X 8,16 POS,0.1 X 0.3 CTR,0.175 H X 0.130 TAIL,BECU,TIN | 09922 | DILB16P-108T |
| | | | | *END MOUNTING PARTS* | | |
| A19U115 | 160-9274-00 | | | IC,DIGITAL:STTL,PLD;PAL,16L8,PRGM 156-1809-03,10NS,180MA,16L8-10,DIP20.3,TUBE | 80009 | 160-9274-00 |
| | | | | *MOUNTING PARTS* | | |
| | 136-0752-00 | | | SKT,PL-IN ELEK:MICROCIRCUIT,20 DIP | 09922 | DILB20P-108 |
| | | | | *END MOUNTING PARTS* | | |
| A19U122 | 156-2236-00 | | | IC,DIGITAL:ASTTL,TRANSCEIVER;OCTAL, WITH REGISTER, NONINV, 3-STATE;74AS652,DIP24.3,TUBE | 80009 | 156-2236-00 |
| | | | | *MOUNTING PARTS* | | |
| | 136-0925-00 | | | SOCKET,DIP:: | 91506 | 224-AG30D |
| | | | | *END MOUNTING PARTS* | | |
| A19U123 | 156-2236-00 | | | IC,DIGITAL:ASTTL,TRANSCEIVER;OCTAL, WITH REGISTER, NONINV, 3-STATE;74AS652,DIP24.3,TUBE | 80009 | 156-2236-00 |
| | | | | *MOUNTING PARTS* | | |
| | 136-0925-00 | | | SOCKET,DIP:: | 91506 | 224-AG30D |
| | | | | *END MOUNTING PARTS* | | |
| A19U124 | 156-2236-00 | | | IC,DIGITAL:ASTTL,TRANSCEIVER;OCTAL, WITH REGISTER, NONINV, 3-STATE;74AS652,DIP24.3,TUBE | 80009 | 156-2236-00 |
| | | | | *MOUNTING PARTS* | | |
| | 136-0925-00 | | | SOCKET,DIP:: | 91506 | 224-AG30D |
| | | | | *END MOUNTING PARTS* | | |
| A19U125 | 156-2236-00 | | | IC,DIGITAL:ASTTL,TRANSCEIVER;OCTAL, WITH REGISTER, NONINV, 3-STATE;74AS652,DIP24.3,TUBE | 80009 | 156-2236-00 |
| | | | | *MOUNTING PARTS* | | |
| | 136-0925-00 | | | SOCKET,DIP:: | 91506 | 224-AG30D |
| | | | | *END MOUNTING PARTS* | | |
| A19U126 | 160-9270-00 | | | IC,DIGITAL:STTL,PLD;PAL,16L8,PRGM 156-1809-01,180MA;16L8A,DIP20.3,TUBE | 80009 | 160-9270-00 |
| | | | | *MOUNTING PARTS* | | |
| | 136-0752-00 | | | SKT,PL-IN ELEK:MICROCIRCUIT,20 DIP | 09922 | DILB20P-108 |
| | | | | *END MOUNTING PARTS* | | |
| A19U130 | 156-4265-00 | | | IC,DIGITAL:FTTL,CONTROLLER;1 MEG DRAM,DUAL PORTED;74F1765,DIP48.4 | 80009 | 156-4265-00 |
| A19U131 | 156-2159-00 | | | IC,DIGITAL:ASTTL,MUX;QUAD 2-TO-1 DATA SELECTOR, NONINV;74AS157,DIP16.3,TUBE | 80009 | 156-2159-00 |
| A19U132 | 156-2159-00 | | | IC,DIGITAL:ASTTL,MUX;QUAD 2-TO-1 DATA SELECTOR, NONINV;74AS157,DIP16.3,TUBE | 80009 | 156-2159-00 |
| A19U133 | 156-2159-00 | | | IC,DIGITAL:ASTTL,MUX;QUAD 2-TO-1 DATA SELECTOR, NONINV;74AS157,DIP16.3,TUBE | 80009 | 156-2159-00 |
| A19U134 | 156-2159-00 | | | IC,DIGITAL:ASTTL,MUX;QUAD 2-TO-1 DATA SELECTOR, NONINV;74AS157,DIP16.3,TUBE | 80009 | 156-2159-00 |
| A19U135 | 156-2159-00 | | | IC,DIGITAL:ASTTL,MUX;QUAD 2-TO-1 DATA SELECTOR, NONINV;74AS157,DIP16.3,TUBE | 80009 | 156-2159-00 |
| A19U138 | 160-9283-00 | | | IC,DIGITAL:STTL,PLD;PAL,20L8,PRGM 156-3837-00,10NS,210MA;20L8-10,DIP24.3,TUBE | 80009 | 160-9283-00 |
| | | | | *MOUNTING PARTS* | | |
| | 136-0925-00 | | | SOCKET,DIP:: | 91506 | 224-AG30D |
| | | | | *END MOUNTING PARTS* | | |

| Component No. | Tektronix Part No. | Serial/Assembly No. Effective | Dscont | Name & Description | Mfr. Code | Mfr. Part No. |
|---|---|---|---|---|---|---|
| A19U142 | 156-3546-00 | | | MICROCKT,DGTL:CMOS,262144 X 4 DRAM | 80009 | 156-3546-00 |
| A19U143 | 156-3546-00 | | | MICROCKT,DGTL:CMOS,262144 X 4 DRAM | 80009 | 156-3546-00 |
| A19U144 | 156-3546-00 | | | MICROCKT,DGTL:CMOS,262144 X 4 DRAM | 80009 | 156-3546-00 |
| A19U145 | 156-3546-00 | | | MICROCKT,DGTL:CMOS,262144 X 4 DRAM | 80009 | 156-3546-00 |
| A19U146 | 156-3546-00 | | | MICROCKT,DGTL:CMOS,262144 X 4 DRAM | 80009 | 156-3546-00 |
| A19U147 | 156-3546-00 | | | MICROCKT,DGTL:CMOS,262144 X 4 DRAM | 80009 | 156-3546-00 |
| A19U148 | 156-3546-00 | | | MICROCKT,DGTL:CMOS,262144 X 4 DRAM | 80009 | 156-3546-00 |
| A19U149 | 156-3546-00 | | | MICROCKT,DGTL:CMOS,262144 X 4 DRAM | 80009 | 156-3546-00 |
| A19U154 | 156-2292-00 | | | IC,DIGITAL:ALSTTL,TRANSCEIVER;OCTAL NONINV, 3-STATE;74ALS652,DIP24.3,TUBE | 80009 | 156-2292-00 |
| A19U155 | 156-2292-00 | | | IC,DIGITAL:ALSTTL,TRANSCEIVER;OCTAL NONINV, 3-STATE;74ALS652,DIP24.3,TUBE | 80009 | 156-2292-00 |
| A19U156 | 156-2292-00 | | | IC,DIGITAL:ALSTTL,TRANSCEIVER;OCTAL NONINV, 3-STATE;74ALS652,DIP24.3,TUBE | 80009 | 156-2292-00 |
| A19U157 | 156-2292-00 | | | IC,DIGITAL:ALSTTL,TRANSCEIVER;OCTAL NONINV, 3-STATE;74ALS652,DIP24.3,TUBE | 80009 | 156-2292-00 |
| A19U158 | 160-9271-00 | | | IC,DIGITAL:STTL,PLD;PAL,16L8,PRGM 156-1809-01,180MA;16L8A,DIP20.3,TUBE | 80009 | 160-9271-00 |
| | | | | *MOUNTING PARTS* | | |
| | 136-0752-00 | | | SKT,PL-IN ELEK:MICROCIRCUIT,20 DIP | 09922 | DILB20P-108 |
| | | | | *END MOUNTING PARTS* | | |
| A19U162 | 156-6527-00 | | | IC,PROCESSOR:NMOS,MICRO PROCESSOR;16 BIT,10 MHZ;MC68010-FN10,PLCC68 | 80009 | 156-6527-00 |
| | | | | *MOUNTING PARTS* | | |
| | 136-0871-00 | | | SOCKET,PLCC:: | 80009 | 136-0871-00 |
| | | | | *END MOUNTING PARTS* | | |
| A19U164 | 156-4107-00 | | | IC,DIGITAL:FTTL,FLIP FLOP;DUAL D-TYPE,METAS TABLE IMMUNITY;74F5074,DIP14.3,TUBE | 80009 | 156-4107-00 |
| A19U168 | 156-4267-00 | | | IC,DIGITAL:FTTL,FLIP FLOP;DUAL,DUAL RANKING D-TYPE;74F50728,DIP14.3,TUBE | 80009 | 156-4267-00 |
| A19U199 | 156-1414-00 | | | IC,DIGITAL:LSTTL,TRANSCEIVER;OCTAL IEEE-488 GPIB BUS XCVR;75160,DIP20.3 | 80009 | 156-1414-00 |
| | | | | *MOUNTING PARTS* | | |
| | 136-0752-00 | | | SKT,PL-IN ELEK:MICROCIRCUIT,20 DIP | 09922 | DILB20P-108 |
| | | | | *END MOUNTING PARTS* | | |
| A19U200 | 156-6223-00 | | | IC,PROCESSOR:NMOS,PERIPHERAL;GPIB CONTROLLE R,TEXAS INSTR PINOUT;9914A,PLCC44,TUBE | 80009 | 156-6223-00 |
| | | | | *MOUNTING PARTS* | | |
| | 136-1047-00 | | | SOCKET,PLCC:PCB,;44 POS,0.05 CTR,0.360 H X 0.125 TAIL,TIN;,, | 80009 | 136-1047-00 |
| | | | | *END MOUNTING PARTS* | | |
| A19U201 | 156-2013-00 | | | IC,DIGITAL:STTL,TRANSCEIVER;IEEE-488 GPIB B US MGT, MULTI-CONTROLLER SYSTEM;75162A,DIP2 2.4 | 80009 | 156-2013-00 |
| | | | | *MOUNTING PARTS* | | |
| | 136-0754-00 | | | SOCKET,DIP: | 09922 | DILB22P-108 |
| | | | | *END MOUNTING PARTS* | | |
| A19U203 | 160-9275-00 | | | IC,DIGITAL:STTL,PLD;PAL,16L8,PRGM 156-1809-03,10NS,180MA,16L8-10,DIP20.3,TUBE | 80009 | 160-9275-00 |
| | | | | *MOUNTING PARTS* | | |
| | 136-0752-00 | | | SKT,PL-IN ELEK:MICROCIRCUIT,20 DIP | 09922 | DILB20P-108 |
| | | | | *END MOUNTING PARTS* | | |
| A19U207 | 160-9272-00 | | | IC,DIGITAL:STTL,PLD;PAL,16L8,PRGM 156-1809-01,180MA;16L8A,DIP20.3,TUBE | 80009 | 160-9272-00 |
| | | | | *MOUNTING PARTS* | | |
| | 136-0752-00 | | | SKT,PL-IN ELEK:MICROCIRCUIT,20 DIP | 09922 | DILB20P-108 |
| | | | | *END MOUNTING PARTS* | | |
| A19U504 | 160-9279-00 | | | IC,DIGITAL:CMOS,PLD;OPT,32 MACROCELL,PRGM 1 56-3825-01,20NS,83.3MHZ;5032-2,DIP28.3,TUBE | 80009 | 160-9279-00 |
| | | | | *MOUNTING PARTS* | | |
| | 136-0728-00 | | | SKT,PL-IN ELEK:MICROCKT,14 CONTACT (QUANTITY 2) | 09922 | DILB14P-108 |

| Component No. | Tektronix Part No. | Serial/Assembly No. Effective | Dscont | Name & Description | Mfr. Code | Mfr. Part No. |
|---|---|---|---|---|---|---|
| | | | | *END MOUNTING PARTS* | | |
| A19U505 | 160-9284-00 | | | IC,DIGITAL:CMOS,PLD;OTP,5016,PRGM 156-4268-00,16 MACROCELL,17NS,83.3MHZ;EMP5016-2,DIP20.3 | 80009 | 160-9284-00 |
| | | | | *MOUNTING PARTS* | | |
| | 136-0752-00 | | | SKT,PL-IN ELEK:MICROCIRCUIT,20 DIP | 09922 | DILB20P-108 |
| | | | | *END MOUNTING PARTS* | | |
| A19U507 | 160-9287-00 | | | IC,DIGITAL:CMOS,PLD;OTP,5064,PRGM 156-6528-00,64 MACROCELL,25NS;EPM5064-1,PLCC44,TUBE | 80009 | 160-9287-00 |
| | | | | *MOUNTING PARTS* | | |
| | 136-1047-00 | | | SOCKET,PLCC:PCB,;44 POS,0.05 CTR,0.360 H X 0.125 TAIL,TIN;,, | 80009 | 136-1047-00 |
| | | | | *END MOUNTING PARTS* | | |
| A19U509 | 156-2540-00 | | | IC,DIGITAL:FTTL,GATE;QUAD 2-INPUT NAND BUFFER, OC;74F38,DIP14.3,TUBE | 18324 | N74F38 N OR F |
| A19U601 | 160-9273-00 | | | IC,DIGITAL:STTL,PLD;PAL,16L8,PRGM 156-1809-01,180MA;16L8A,DIP20.3,TUBE | 80009 | 160-9273-00 |
| | | | | *MOUNTING PARTS* | | |
| | 136-0752-00 | | | SKT,PL-IN ELEK:MICROCIRCUIT,20 DIP | 09922 | DILB20P-108 |
| | | | | *END MOUNTING PARTS* | | |
| A19U602 | 160-9280-00 | | | IC,DIGITAL:CMOS,PLD;OPT,32 MACROCELL,PRGM 156-3825-01,20NS,83.3MHZ;5032-2,DIP28.3,TUBE | 80009 | 160-9280-00 |
| | | | | *MOUNTING PARTS* | | |
| | 136-0728-00 | | | SKT,PL-IN ELEK:MICROCKT,14 CONTACT (QUANTITY 2) | 09922 | DILB14P-108 |
| | | | | *END MOUNTING PARTS* | | |
| A19U605 | 160-9277-00 | | | IC,DIGITAL:STTL,PLD;PAL,16L8,PRGM 156-2124-00,15NS,180MA,16L8B,DIP20.3,TUBE | 80009 | 160-9277-00 |
| | | | | *MOUNTING PARTS* | | |
| | 136-0752-00 | | | SKT,PL-IN ELEK:MICROCIRCUIT,20 DIP | 09922 | DILB20P-108 |
| | | | | *END MOUNTING PARTS* | | |
| A19U606 | 160-9285-00 | | | IC,DIGITAL:CMOS,PLD;OTP,5016,PRGM 156-4268-00,16 MACROCELL,17NS,83.3MHZ;EMP5016-2,DIP20.3 | 80009 | 160-9285-00 |
| | | | | *MOUNTING PARTS* | | |
| | 136-0752-00 | | | SKT,PL-IN ELEK:MICROCIRCUIT,20 DIP | 09922 | DILB20P-108 |
| | | | | *END MOUNTING PARTS* | | |
| A19U607 | 160-9278-00 | | | IC,DIGITAL:STTL,PLD;PAL,16L8,PRGM 156-2124-00,15NS,180MA,16L8B,DIP20.3,TUBE | 80009 | 160-9278-00 |
| | | | | *MOUNTING PARTS* | | |
| A19U607 | 136-0752-00 | | | SKT,PL-IN ELEK:MICROCIRCUIT,20 DIP | 09922 | DILB20P-108 |
| | | | | *END MOUNTING PARTS* | | |
| A19U608 | 160-9286-00 | | | IC,DIGITAL:CMOS,PLD;EEPLD,26V12,PRGM 156-4270-00,20NS,105MA;26V12-20,DIP28.3 | 80009 | 160-9286-00 |
| | | | | *MOUNTING PARTS* | | |
| | 136-0728-00 | | | SKT,PL-IN ELEK:MICROCKT,14 CONTACT (QUANTITY 2) | 09922 | DILB14P-108 |
| | | | | *END MOUNTING PARTS* | | |
| A19U609 | 160-9281-00 | | | IC,DIGITAL:CMOS,PLD;OPT,32 MACROCELL,PRGM 156-3825-01,20NS,83.3MHZ;5032-2,DIP28.3,TUBE | 80009 | 160-9281-00 |
| | | | | *MOUNTING PARTS* | | |
| | 136-0728-00 | | | SKT,PL-IN ELEK:MICROCKT,14 CONTACT (QUANTITY 2) | 09922 | DILB14P-108 |
| | | | | *END MOUNTING PARTS* | | |
| A19U610 | 160-9282-00 | | | IC,DIGITAL:CMOS,PLD;OPT,32 MACROCELL,PRGM 156-3825-01,20NS,83.3MHZ;5032-2,DIP28.3,TUBE | 80009 | 160-9282-00 |
| | | | | *MOUNTING PARTS* | | |
| | 136-0728-00 | | | SKT,PL-IN ELEK:MICROCKT,14 CONTACT (QUANTITY 2) | 09922 | DILB14P-108 |
| | | | | *END MOUNTING PARTS* | | |
| A19U611 | 156-6031-00 | | | IC,PROCESSOR:NMOS,PERIPHERAL;DUAL ASYNCH RECEIVER/TRANSMITTER, DUART;68681,PLCC44 | 80009 | 156-6031-00 |
| | | | | *MOUNTING PARTS* | | |

| Component No. | Tektronix Part No. | Serial/Assembly No. Effective | Dscont | Name & Description | Mfr. Code | Mfr. Part No. |
|---|---|---|---|---|---|---|
| | 136-1047-00 | | | SOCKET,PLCC:PCB,;44 POS,0.05 CTR,0.360 H X 0.125 TAIL,TIN;,,<br>*END MOUNTING PARTS* | 80009 | 136-1047-00 |
| A19U612 | 156-2391-00 | | | IC,DIGITAL:ALSTTL,BUFFER/DRIVER;OCTAL NONINV, 3-STATE;74ALS541,DIP20.3,TUBE | 80009 | 156-2391-00 |
| A19U613 | 156-2391-00 | | | IC,DIGITAL:ALSTTL,BUFFER/DRIVER;OCTAL NONINV, 3-STATE;74ALS541,DIP20.3,TUBE | 80009 | 156-2391-00 |
| A19Y501 | 119-2624-00 | | | OSCILLATOR,RF:33.333MHZ, +/- 0.005%,TTL, 4 PIN 14 PIN DIP COMPATIBLE | 14301 | 012-405-02183 |
| A19Y502 | 119-1413-00 | | | OSC,XTAL CLOCK:20.0MHZ, +/-0.05 %, TTL, 4 PIN 14 PIN DIP COMPATIBLE | 14301 | AE 404-417 |
| A19Y601 | 158-0271-00 | | | XTAL UNIT,QTZ:3.6864MHZ,700PPM,SERIES,ESR 120 OHMS,HC-18/U OR HC-49UPKG<br>*MOUNTING PARTS* | 61429 | FOX-0368S |
| | 352-0130-01 | | | HLDR,XTAL UNIT:STEEL TIN PL<br>*END MOUNTING PARTS* | 80009 | 352-0130-01 |

| Component No. | Tektronix Part No. | Serial/Assembly No. Effective | Dscont | Name & Description | Mfr. Code | Mfr. Part No. |
|---|---|---|---|---|---|---|
| B1 | 119-2616-02 | | | FAN:24VDC,28A,6.7W,W/LEADS 17.0L,VM700 | 80009 | 119-2616-02 |
| W252 | 174-1371-00 | | | CA ASSY,SP,ELEC:2,26 AWG,3.75 L,RIBBON | 80009 | 174-1371-00 |

# DIAGRAMS/CIRCUIT BOARD ILLUSTRATIONS

## Symbols

Graphic symbols and class designation letters are based on ANSI Standard Y32.2-1975.

Logic symbology is based on ANSI Y32.14-1973 in terms of positive logic. Logic symbols depict the logic function performed and may differ from the manufacturer's data.

Both overline and parenthesis indicate a low asserting state.

Example: $\overline{\text{ID CONTROL}}$ or (ID CONTROL)

Abbreviations are based on ANSI Y1.1-1972.

Other ANSI standards that are used in the preparation of diagrams by Tektronix, Inc. are:

Y14.15, 1966 — Drafting Practices.
Y14.2, 1973 — Line Conventions and Lettering.
Y10.5, 1968 — Letter Symbols for Quantities Used in Electrical Science and Electrical Engineering.

American National Standard Institute
1430 Broadway, New York, New York 10018

## Component Values

Electrical components shown on the diagrams are in the following units unless noted otherwise:

Capacitors:
Values one or greater are in picofarads (pF).
Values less than one are in microfarads ($\mu$F).
Resistors = Ohms ($\Omega$).

**The following information and special symbols may appear in this manual.**

## Assembly Numbers

Each assembly in the instrument is assigned an assembly number (e.g., A20). The assembly number appears on the diagram (in circuit board outline), circuit board illustration title, and lookup table for the schematic diagram.

The Replaceable Electrical Parts List is arranged by assembly number in numerical sequence; the components are listed by component number. Example:

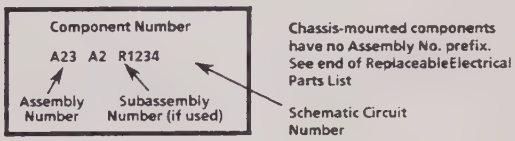


## Grid Coordinates

The schematic diagram and circuit board component location illustration have grids. A lookup table with the grid coordinates is provided for ease of locating the component. Only the components illustrated on the facing diagram are listed in the lookup table.

When more than one schematic diagram is used to illustrate the circuitry on a circuit board, the circuit board illustration may only appear opposite the first diagram; the lookup table will list the diagram number of other diagrams that the other circuitry appears on.

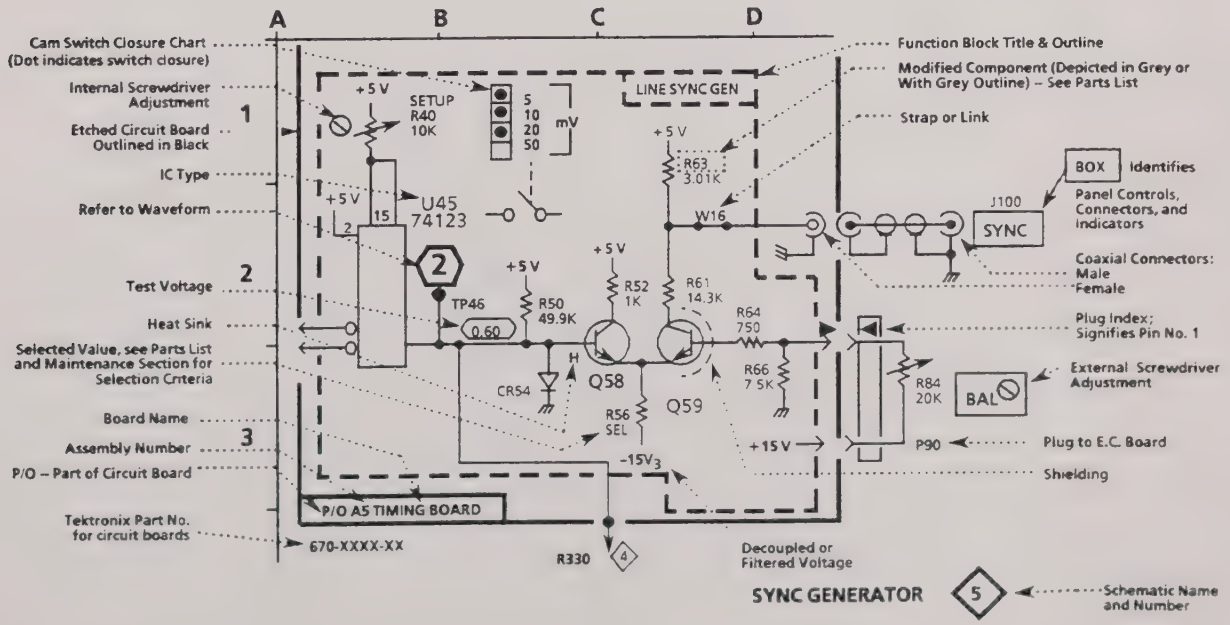

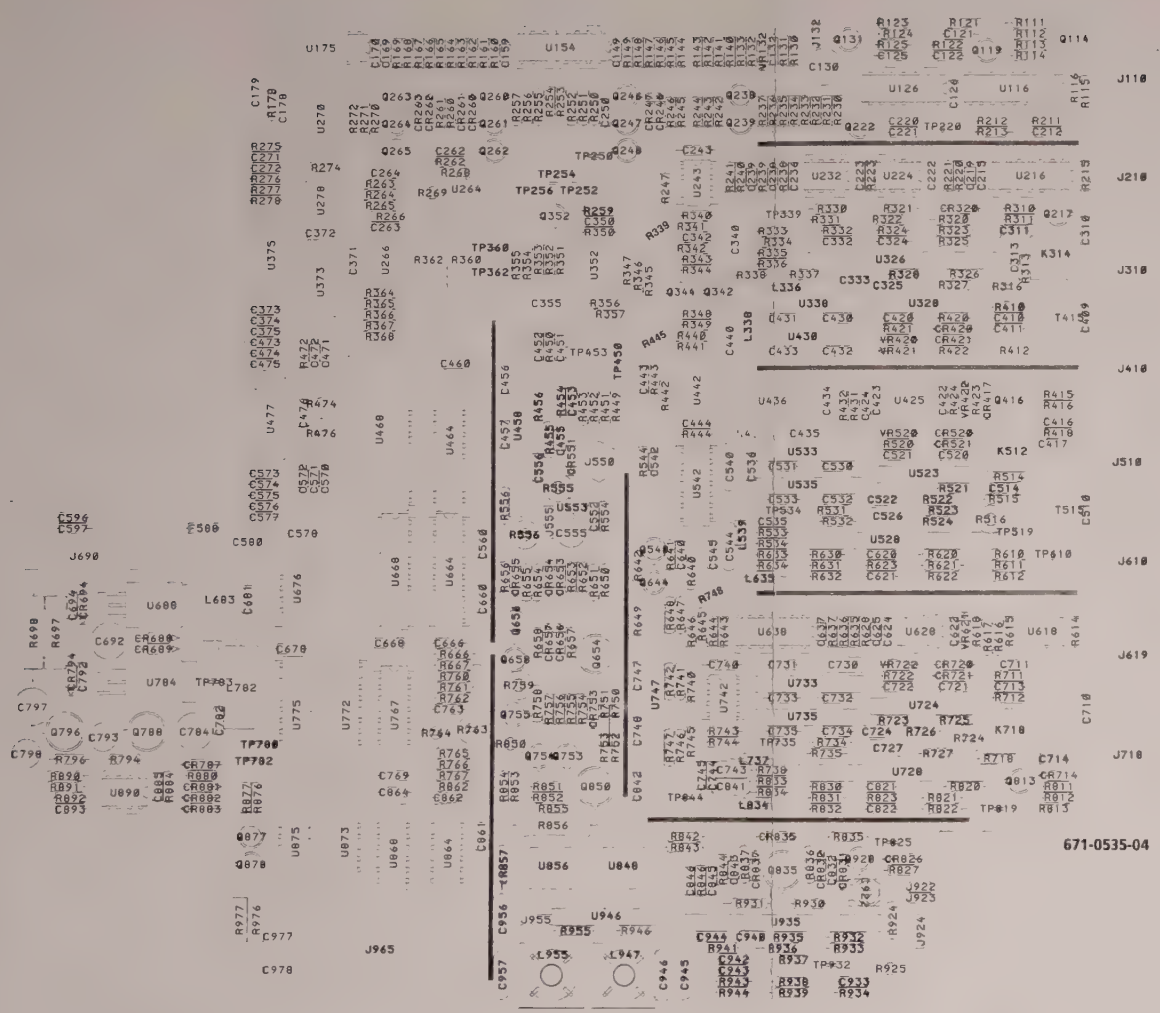

671-0535-04

Static Sensitive Devices
See Maintenance Section

**A1 ANALOG INPUT BOARD**

## ANALOG BOARD
## Schematic <1> Look-Up Chart

The schematic diagram has an alpha-numeric grid to assist in locating parts within that diagram. The etched circuit boards follow a numbering sequence starting with the lowest number at the upper left corner, as pictured in this manual.

**ASSEMBLY A1.** *Partial Assembly A1 also shown on Schematics 2, 3, 4, 5, 6, and 7.*

| CIRCUIT NUMBER | SCHEM LOCATION | CIRCUIT NUMBER | SCHEM LOCATION |
|---|---|---|---|
| C159 | C4 | R618 | C2 |
| C542 | F4 | R628 | G4 |
| C625 | G4 | R635 | G4 |
| C637 | H4 | R636 | G4 |
| C640 | E4 | R637 | H3 |
| C710 | A1 | R640 | E4 |
| C711 | B2 | R643 | G4 |
| C713 | B2 | R644 | E4 |
| C714 | C2 | R645 | E4 |
| C724 | E3 | R711 | B2 |
| C727 | E3 | R712 | C2 |
| C730 | G4 | R718 | D3 |
| C743 | E4 | R722 | C2 |
| C821 | E2 | R723 | C2 |
| C822 | D2 | R724 | D2 |
| C841 | E4 | R725 | D2 |
| | | R726 | E2 |
| CR260 | C4 | R727 | D3 |
| CR261 | D4 | | |
| CR714 | C1 | R734 | E2 |
| CR720 | C2 | R735 | E2 |
| CR721 | C2 | R738 | F3 |
| | | R743 | E4 |
| J619 | A1 | R744 | C5 |
| J718 | A2 | R748 | E4 |
| K718A | B1 | R811 | C1 |
| K718B | B2 | R812 | B1 |
| K718C | B1 | R813 | B2 |
| | | R820 | D2 |
| L737 | E4 | R821 | D3 |
| L834 | E4 | R822 | D3 |
| Q239 | G5 | R823 | E2 |
| Q260 | C4 | R830 | E3 |
| Q261 | C4 | R831 | E4 |
| Q262 | C3 | R832 | D2 |
| Q813 | C1 | R833 | E3 |
| | | R834 | E4 |
| R141 | G5 | | |
| R143 | G5 | T715 | A1 |
| R144 | F5 | | |
| R160 | B5 | TP735 | E2 |
| R161 | C4 | | |
| R162 | C4 | U154B | C4 |
| | | U542A | F4 |
| R163 | D4 | U618B | G3 |
| R164 | C4 | U628 | G4 |
| R242 | G4 | U638A | H4 |
| R243 | G5 | U638B | G4 |
| R244 | G5 | | |
| R253 | C3 | U724 | D2 |
| | | U728 | D2 |
| R254 | C4 | U742 | F4 |
| R255 | C4 | | |
| R256 | C4 | VR621 | C2 |
| R257 | C4 | VR722 | C2 |
| R366 | E4 | | |
| R615 | G3 | | |
| R616 | G4 | | |
| R617 | G4 | | |

*See parts list for earlier serial number ranges.

## ANALOG BOARD
## Schematic <2> Look-Up Chart

The schematic diagram has an alpha-numeric grid to assist in locating parts within that diagram. The etched circuit boards follow a numbering sequence starting with the lowest number at the upper left corner, as pictured in this manual.

**ASSEMBLY A1.** *Partial Assembly A1 also shown on Schematics 1, 3, 4, 5, 6, and 7.*

| CIRCUIT NUMBER | SCHEM LOCATION | CIRCUIT NUMBER | SCHEM LOCATION |
|---|---|---|---|
| C149 | C4 | R423 | C2 |
| C416 | B2 | R424 | G4 |
| C417 | B2 | R431 | G4 |
| C424 | G4 | R432 | G4 |
| C434 | G4 | R436 | G4 |
| C443 | E4 | R440 | E4 |
| C510 | A1 | R441 | E4 |
| C514 | C2 | R442 | C5 |
| C522 | E3 | R443 | E4 |
| C526 | E3 | R444 | E4 |
| C535 | H4 | R445 * | E4 |
| C536 | F4 | R514 | C2 |
| C540 | E4 | R515 | B2 |
| C544 | E4 | R516 | D2 |
| C620 | E2 | R520 | C2 |
| C621 | D2 | R521 | C2 |
| | | R522 | D2 |
| CR246 | C4 | R523 | E2 |
| CR247 | D4 | | |
| CR417 | C1 | R524 | D3 |
| CR520 | C2 | R531 | E2 |
| CR521 | C2 | R532 | E2 |
| | | R533 | H3 |
| J510 | A2 | R534 | F3 |
| J610 | A1 | R610 | D2 |
| K512A | B1 | R611 | G4 |
| K512B | B2 | R612 | G4 |
| K512C | B1 | R614 | G3 |
| | | R620 | D3 |
| L539 | E4 | R621 | D3 |
| L635 | E4 | R622 | D3 |
| Q238 | G5 | R623 | E2 |
| Q246 | C4 | R630 | E3 |
| Q247 | C3 | R631 | E4 |
| Q248 | C4 | R632 | D2 |
| Q416 | C1 | R633 | E3 |
| | | R634 | E4 |
| R132 | G5 | | |
| R133 | G4 | T515 | A1 |
| R140 | G5 | | |
| R142 | F5 | TP534 | E2 |
| R145 | B5 | | |
| R146 | C4 | U154A | C4 |
| | | U425 | G4 |
| R147 | D4 | U436A | G4 |
| R148 | C4 | U436B | H4 |
| R149 | C4 | U442 | F4 |
| R236 | G5 | U523 | D2 |
| R237 | G5 | | |
| R245 | C4 | U528 | D2 |
| | | U542B | F4 |
| R246 | C3 | U618A | G3 |
| R250 | C4 | | |
| R251 | C4 | VR422 | C2 |
| R252 | C4 | VR520 | C2 |
| R365 | E4 | | |
| R415 | C1 | | |
| R416 | B1 | | |
| R418 | B2 | | |

*See parts list for earlier serial number ranges.

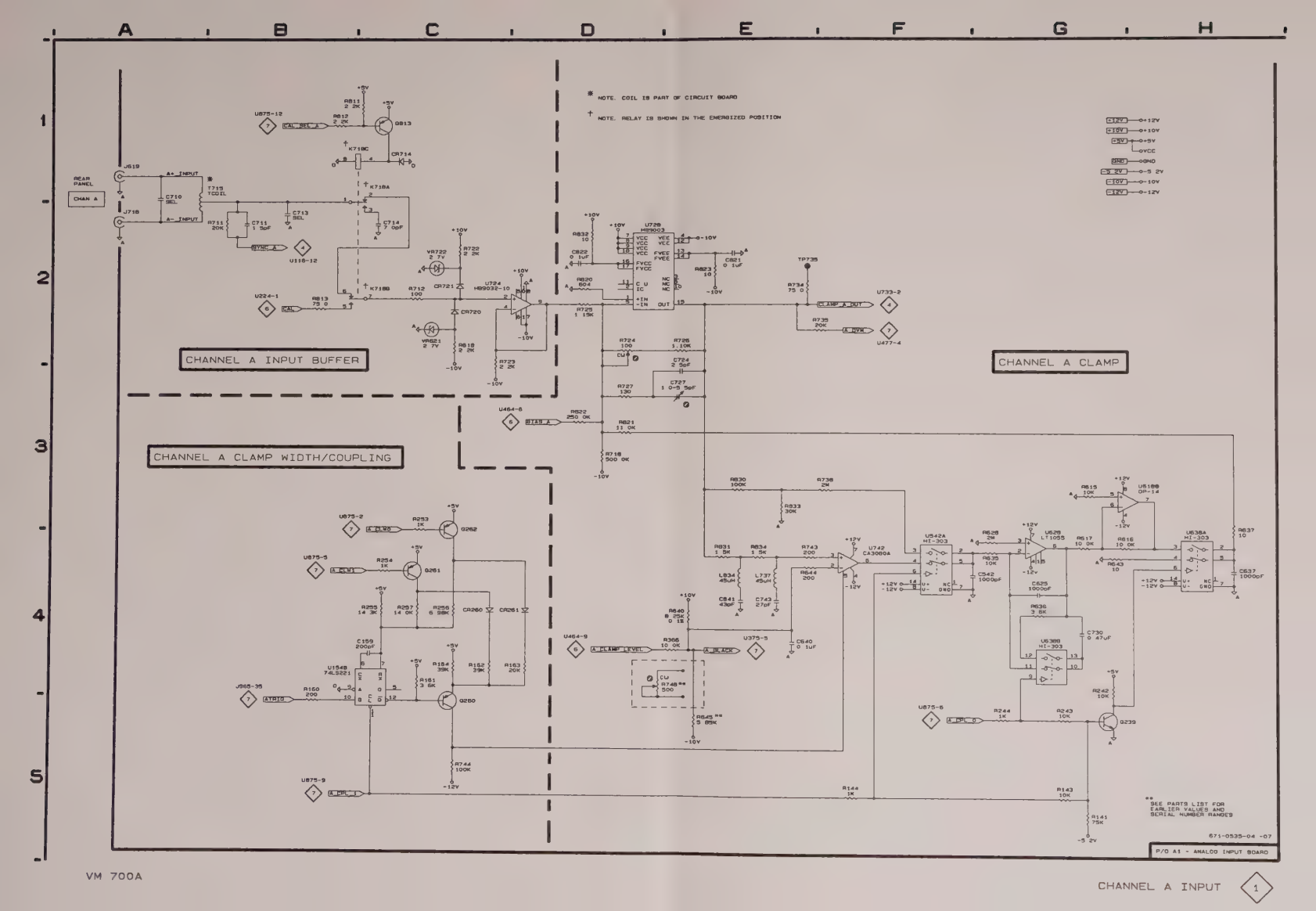
CHANNEL A INPUT BUFFER
CHANNEL A CLAMP WIDTH/COUPLING
CHANNEL A CLAMP
* NOTE. COIL IS PART OF CIRCUIT BOARD
+ NOTE. RELAY IS SHOWN IN THE ENERGIZED POSITION
** SEE PARTS LIST FOR EARLIER VALUES AND SERIAL NUMBER RANGES
671-0535-04 -07
P/O A1 - ANALOG INPUT BOARD

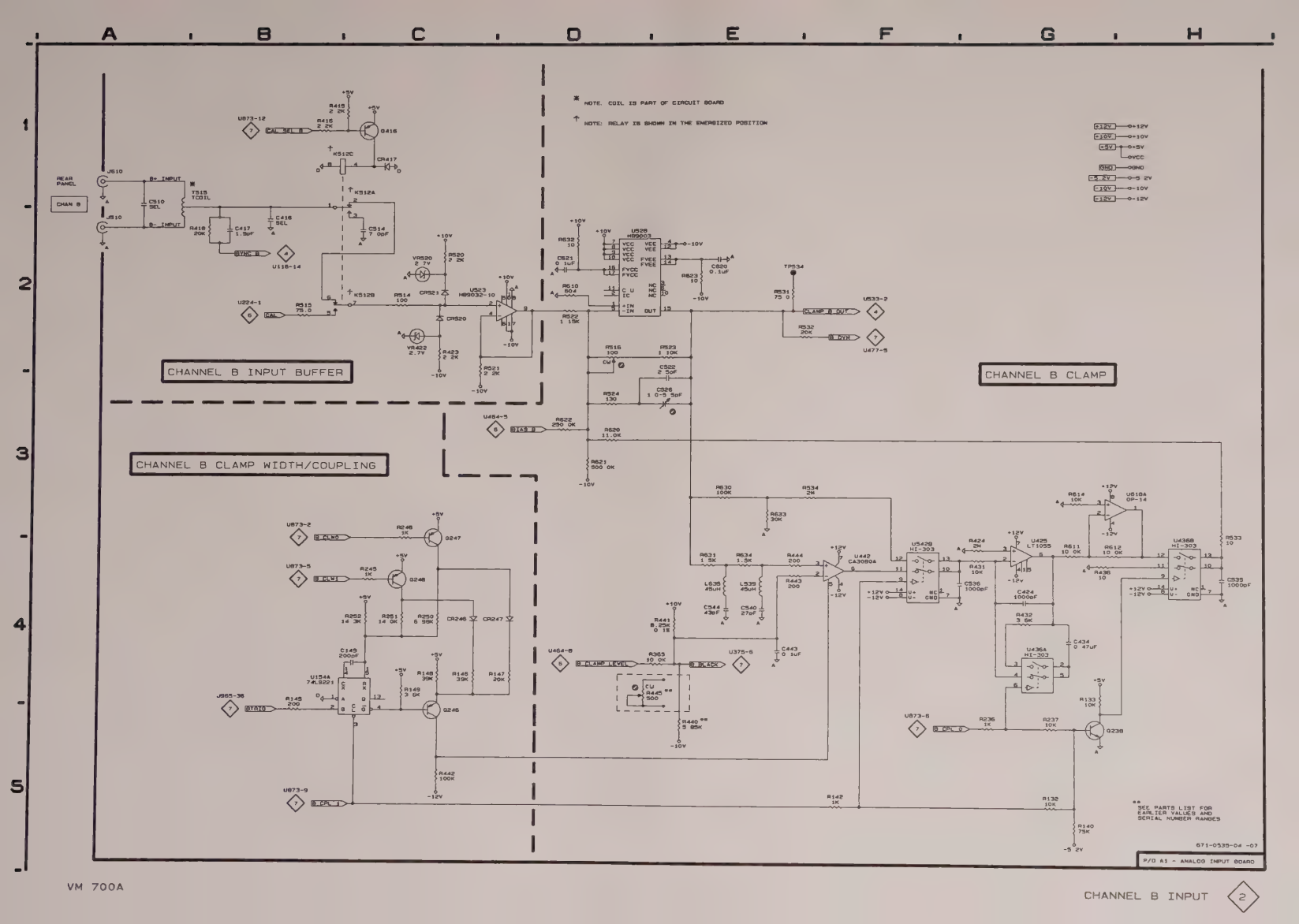
A B C D E F G H
1 2 3 4 5
CHANNEL B INPUT BUFFER
CHANNEL B CLAMP WIDTH/COUPLING
CHANNEL B CLAMP
* NOTE: COIL IS PART OF CIRCUIT BOARD
† NOTE: RELAY IS SHOWN IN THE ENERGIZED POSITION
** SEE PARTS LIST FOR EARLIER VALUES AND SERIAL NUMBER RANGES
671-0535-04 -07
P/O A1 - ANALOG INPUT BOARD

## ANALOG BOARD
## Schematic <3> Look-Up Chart

The schematic diagram has an alpha-numeric grid to assist in locating parts within that diagram. The etched circuit boards follow a numbering sequence starting with the lowest number at the upper left corner, as pictured in this manual.

**ASSEMBLY A1.** *Partial Assembly A1 also shown on Schematics 1, 2, 4, 5, 6, and 7.*

| CIRCUIT NUMBER | SCHEM LOCATION | CIRCUIT NUMBER | SCHEM LOCATION |
|---|---|---|---|
| C169 | C4 | R261 | C4 |
| C219 | H4 | R270 | C4 |
| C222 | G4 | R271 | C4 |
| C238 | G4 | R272 | C4 |
| C239 | F4 | R310 | C1 |
| C311 | C2 | R311 | B1 |
| C313 | B2 | R313 | B2 |
| C324 | E2 | R316 | D2 |
| C325 | E3 | R320 | D3 |
| C332 | D2 | R321 | G4 |
| C333 | E3 | R322 | D3 |
| C340 | E4 | R323 | D3 |
| C342 | E4 | R324 | E2 |
| C409 | A1 | R325 | D2 |
| C411 | B2 | R326 | D2 |
| C440 | E4 | R327 | E2 |
| CR262 | C4 | R328 | D3 |
| CR263 | D4 | R330 | G4 |
| CR320 | C1 | R331 | G3 |
| CR420 | C2 | R332 | D2 |
| CR421 | C2 | R333 | E3 |
| J310 | A2 | R334 | E2 |
| J410 | A1 | R335 | E2 |
| | | R336 | E4 |
| K314A | B1 | R337 | E4 |
| K314B | B2 | | |
| K314C | B1 | R338 | E4 |
| | | R339 * | E4 |
| L336 | E4 | R340 | E4 |
| L338 | E4 | R341 | E4 |
| | | R342 | E4 |
| Q217 | C1 | | |
| Q222 | G5 | R364 | E4 |
| Q263 | C4 | R410 | C2 |
| Q264 | C3 | R412 | B2 |
| Q265 | C4 | R420 | C2 |
| | | R421 | C2 |
| R165 | B5 | R422 | C2 |
| R166 | C4 | | |
| R167 | D4 | T415 | A1 |
| R168 | C4 | | |
| R169 | C4 | TP339 | E2 |
| R215 | G4 | U126B | F4 |
| R220 | H3 | U175A | C4 |
| R221 | G4 | U175B | A5 |
| R230 | G5 | U216A | H4 |
| R231 | G4 | U216B | G4 |
| R232 | G5 | U224B | G3 |
| R233 | G5 | U232 | G4 |
| R234 | G5 | U243 | F4 |
| R235 | F5 | U326 | D2 |
| R238 | G4 | U328 | D2 |
| R239 | G4 | VR420 | C2 |
| R240 | F3 | VR421 | C2 |
| R241 | E3 | | |
| R247 | C5 | | |
| R260 | C3 | | |

*See parts list for earlier serial number ranges.

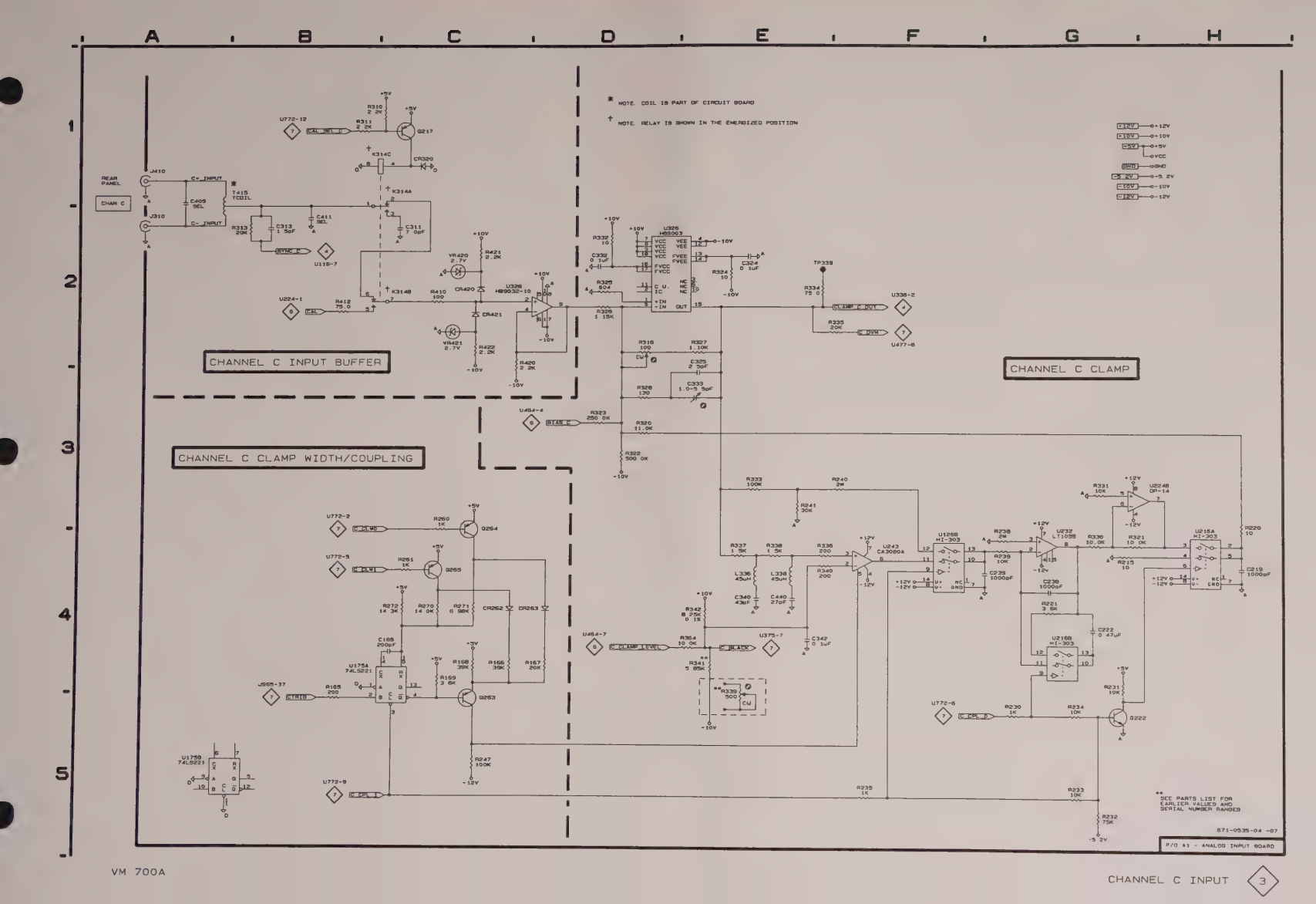
CHANNEL C INPUT BUFFER
CHANNEL C CLAMP WIDTH/COUPLING
CHANNEL C CLAMP
* NOTE. COIL IS PART OF CIRCUIT BOARD
† NOTE. RELAY IS SHOWN IN THE ENERGIZED POSITION
** SEE PARTS LIST FOR EARLIER VALUES AND SERIAL NUMBER RANGES
671-0535-04 -07
P/O 61 - ANALOG INPUT BOARD

## ANALOG BOARD
## Schematic <4> Look-Up Chart

The schematic diagram has an alpha-numeric grid to assist in locating parts within that diagram. The etched circuit boards follow a numbering sequence starting with the lowest number at the upper left corner, as pictured in this manual.

**ASSEMBLY A1.** *Partial Assembly A1 also shown on Schematics 1, 2, 3, 5, 6, and 7.*

| CIRCUIT NUMBER | SCHEM LOCATION | CIRCUIT NUMBER | SCHEM LOCATION |
|---|---|---|---|
| C125 | F5 | R745 | F4 |
| C130 | G4 | R746 | G3 |
| C132 | G4 | R747 | G3 |
| C744 | F3 | | |
| C745 | F3 | TP844 | G3 |
| | | | |
| J110 | A5 | U116 | D5 |
| J132 | H4 | U126A | F4 |
| J210 | A5 | U338 | C1 |
| J922 | H3 | U430 | C1 |
| | | U533 | C2 |
| Q114 | E4 | | |
| Q119 | E4 | U535 | C3 |
| Q131 | G4 | U668 | B4 |
| Q342 | E1 | U733 | C3 |
| Q344 | E1 | U735 | C4 |
| | | U747 | F3 |
| Q548 | D2 | | |
| Q644 | E2 | VR132 | G4 |
| | | | |
| R111 | E4 | | |
| R112 | E5 | | |
| R113 | E5 | | |
| R114 | E4 | | |
| R115 | B5 | | |
| | | | |
| R116 | B5 | | |
| R121 | E5 | | |
| R122 | E5 | | |
| R123 | G4 | | |
| R124 | F5 | | |
| | | | |
| R125 | G5 | | |
| R130 | G4 | | |
| R131 | G4 | | |
| R211 | C5 | | |
| R212 | C5 | | |
| | | | |
| R213 | C5 | | |
| R343 | E1 | | |
| R344 | E1 | | |
| R348 | D1 | | |
| R349 | D1 | | |
| | | | |
| R544 | D2 | | |
| R641 | D2 | | |
| R642 | D2 | | |
| R646 | E3 | | |
| R647 | E3 | | |
| | | | |
| R648 | E3 | | |
| R649 | D3 | | |
| R740 | E4 | | |
| R741 | E4 | | |
| R742 | F4 | | |

*See parts list for earlier serial number ranges.

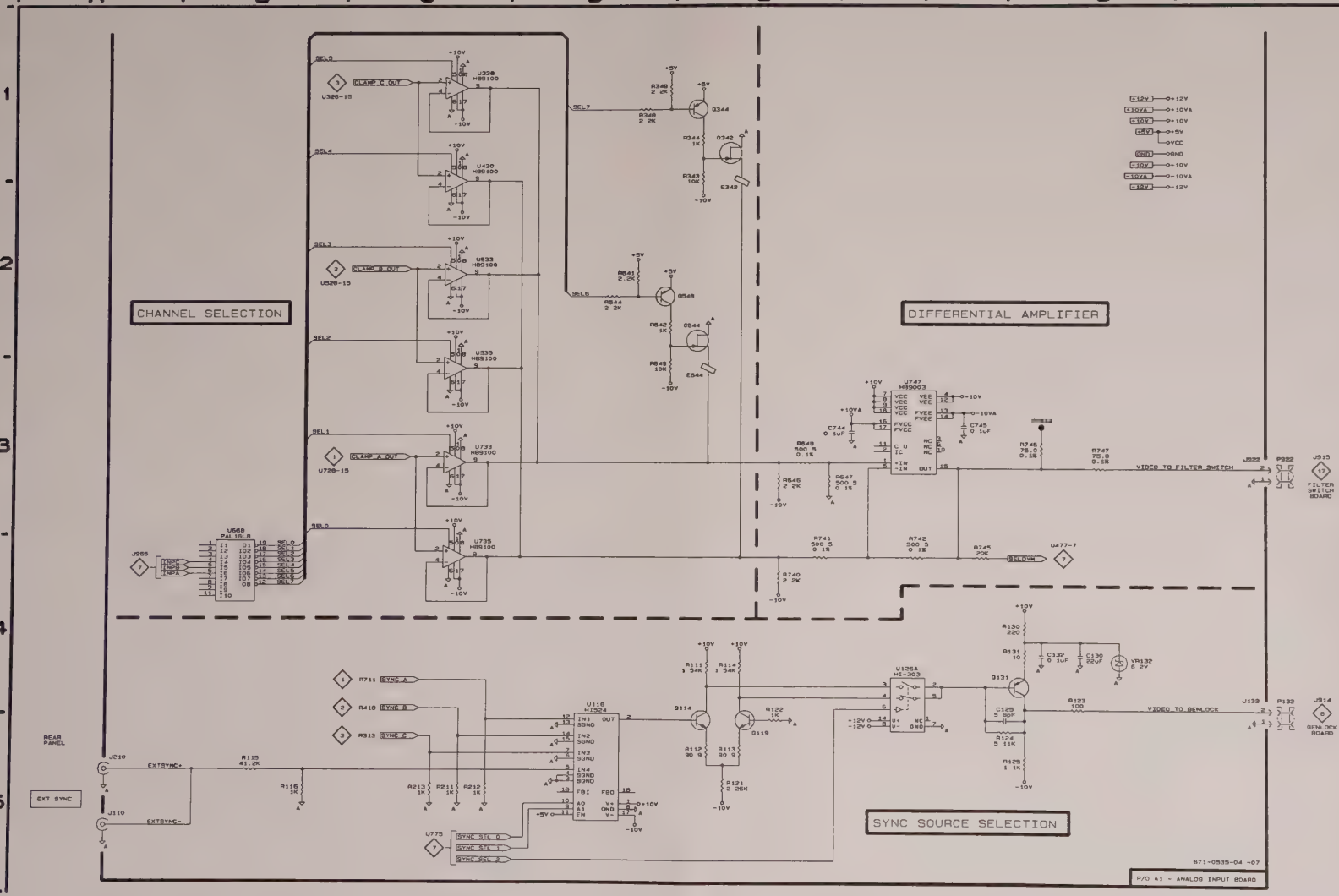
CHANNEL SELECTION
DIFFERENTIAL AMPLIFIER
SYNC SOURCE SELECTION
VIDEO TO FILTER SWITCH
VIDEO TO GENLOCK
CLAMP A OUT
CLAMP B OUT
CLAMP C OUT
EXT SYNC
REAR PANEL
671-0535-04 -07
P/O A1 - ANALOG INPUT BOARD

## ANALOG BOARD
## Schematic <5> Look-Up Chart

The schematic diagram has an alpha-numeric grid to assist in locating parts within that diagram. The etched circuit boards follow a numbering sequence starting with the lowest number at the upper left corner, as pictured in this manual.

**ASSEMBLY A1.** *Partial Assembly A1 also shown on Schematics 1, 2, 3, 4, 6, and 7.*

| CIRCUIT NUMBER | SCHEM LOCATION | CIRCUIT NUMBER | SCHEM LOCATION | CIRCUIT NUMBER | SCHEM LOCATION |
|---|---|---|---|---|---|
| C263 | B1 | R264 | B1 | R853 | D4 |
| C451 | G4 | R265 | B1 | R854 | D4 |
| C452 | G4 | R266 | B1 | R855 | B3 |
| C453 | H4 | R449 | H5 | R856 | D5 |
| C455 | G4 | R450 | G4 | R858 | D1 |
| C556 | G4 | R451 | H4 | R862 | G5 |
| C660 | B2 | R452 | H4 | R924 | E3 |
| C666 | B1 | R453 | H4 | R925 | F2 |
| C763 | B2 | R454 | H4 | R930 | A4 |
| C843 | C4 | R455 | G4 | R931 | A4 |
| C846 | E1 | R456 | G4 | R932 | F2 |
| C862 | F5 | R555 | G4 | R933 | F2 |
| C922 | A4 | R556 | E4 | R934 | E3 |
| C933 | F2 | R557 | G4 | R935 * | F2 |
| C940 * | F2 | R650 | F3 | R936 | F2 |
| C943 | F1 | R651 | F3 | R937 | G2 |
| C944 | F1 | R652 | E3 | R938 | E2 |
| C945 | D2 | R653 | E3 | R939 | E2 |
| C946 | D2 | R654 | E3 | R941 | F2 |
| C956 | C2 | R655 | E3 | R943 | E2 |
| C957 | C1 | R656 | E5 | R944 | F1 |
| | | R657 | E4 | R946 | E2 |
| CR653 | E3 | R658 | F4 | R955 | D2 |
| CR654 | E3 | R666 | C1 | | |
| CR655 | E5 | R667 | C1 | TP450 | H4 |
| CR656 | E4 | | | TP453 | H4 |
| CR657 | E4 | R750 | B3 | TP932 | G1 |
| | | R751 | C3 | | |
| CR753 | E4 | R752 | B3 | U278B | B1 |
| CR826 | A3 | R753 | C3 | U373D | B2 |
| CR831 | A4 | R754 | E4 | U458 | G3 |
| CR832 | A4 | | | U664 | C1 |
| CR835 | B4 | R755 | E4 | U767 | B5 |
| | | R756 | E4 | | |
| CR837 | B4 | R757 | E4 | U848 | C4 |
| | | R758 | F4 | U856 | C4 |
| J550 | H4 | R759 | E4 | U864 | F4 |
| J555 | F4 | | | U868 | B4 |
| J923 | A2 | R760 | B1 | U935 | F1 |
| J924 | E2 | R761 | B1 | | |
| J955 | C1 | R762 | B1 | U946 | E2 |
| | | R763 | A1 | | |
| L947 | D2 | R764 | F5 | | |
| L955 | C2 | | | | |
| | | R765 | F5 | | |
| Q654A | F3 | R766 | F5 | | |
| Q654B | E3 | R767 | F5 | | |
| Q656 | E4 | R827 | A3 | | |
| Q658 | F4 | R835 | A3 | | |
| Q753 | E4 | | | | |
| | | R836 | A4 | | |
| Q754 | E4 | R837 | B4 | | |
| Q755 | E4 | R842 | B4 | | |
| Q835A | A4 | R843 | B4 | | |
| Q835B | B4 | R844 | C4 | | |
| Q850A | B3 | | | | |
| | | R846 | E1 | | |
| Q850B | C3 | R850 | D4 | | |
| Q928 | A3 | R851 | D4 | | |
| | | R852 | D4 | | |

*See parts list for earlier serial number ranges.

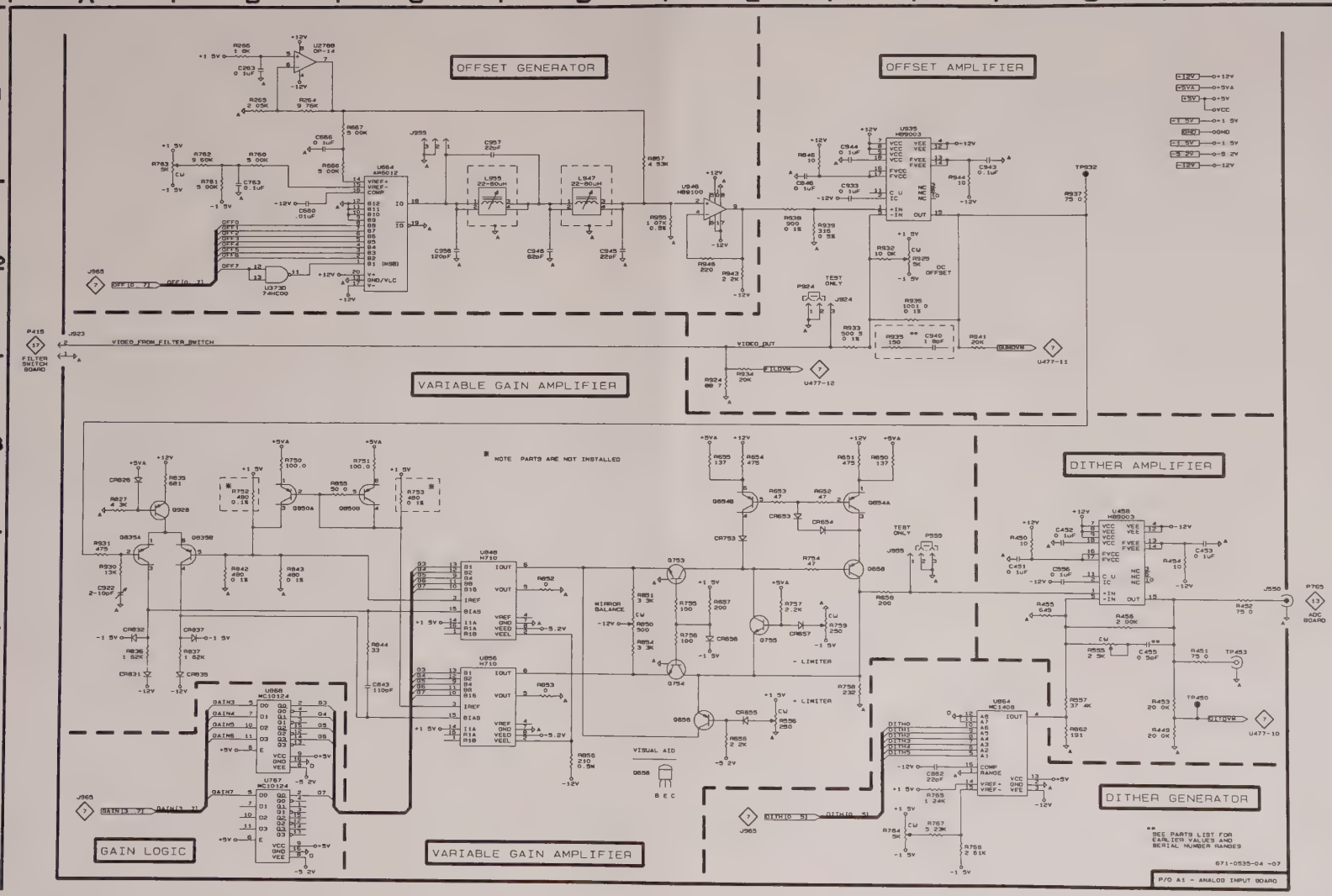
OFFSET GENERATOR
OFFSET AMPLIFIER
VARIABLE GAIN AMPLIFIER
DITHER AMPLIFIER
DITHER GENERATOR
GAIN LOGIC
VARIABLE GAIN AMPLIFIER
NOTE PARTS ARE NOT INSTALLED
VIDEO_FROM_FILTER_SWITCH
VIDEO_OUT
- LIMITER
+ LIMITER
VISUAL AID
SEE PART9 LIST FOR EARLIER VALUES AND SERIAL NUMBER RANGES
671-0535-04 -07
P/O A1 - ANALOG INPUT BOARD

# ANALOG BOARD
## Schematic <6> Look-Up Chart

The schematic diagram has an alpha-numeric grid to assist in locating parts within that diagram. The etched circuit boards follow a numbering sequence starting with the lowest number at the upper left corner, as pictured in this manual.

**ASSEMBLY A1.** *Partial Assembly A1 also shown on Schematics 1, 2, 3, 4, 5, and 7.*

| CIRCUIT NUMBER | SCHEM LOCATION | CIRCUIT NUMBER | SCHEM LOCATION | CIRCUIT NUMBER | SCHEM LOCATION |
|---|---|---|---|---|---|
| C121 | C5 | C731 | G5 | R353 | B3 |
| C122 | D5 | C732 | D5 | R354 | A3 |
| C126 | B5 | C733 | C5 | R355 | A4 |
| C170 | B5 | C734 | D5 | R356 | C4 |
| C212 | D5 | C722 | C5 | R357 | B4 |
| C215 | G5 | C735 | C5 | R360 | F3 |
| C220 | F5 | C740 | H5 | R362 | F3 |
| C221 | G5 | C747 | C5 | R367 | D2 |
| C223 | F5 | C748 | E5 | R368 | D2 |
| C236 | H5 | C769 | B2 | R474 | C2 |
| C243 | F5 | C782 | B2 | R476 | C2 |
| C250 | B5 | C784 | B2 | R554 | D4 |
| C264 | F5 | C792 | D4 | R697 | C4 |
| C310 | G5 | C793 | G4 | R698 | C3 |
| C350 | F5 | C797 | D4 | R794 | F3 |
| C355 | B4 | C798 | G4 | R796 | G3 |
| C371 | B5 | C832 | G5 | R876 | H4 |
| C372 | H5 | C842 | C5 | R877 | H3 |
| C410 | D5 | C845 | H5 | R880 | F3 |
| C420 | C5 | C861 | B5 | R884 | G4 |
| C422 | F5 | C864 | B5 | R890 | F4 |
| C423 | H5 | C885 | E5 | R891 | F4 |
| C430 | E5 | C893 | E5 | R892 | F4 |
| C431 | C5 | C942 | G5 | R976 | H4 |
| C432 | D5 | C977 | H4 | R977 | H3 |
| C433 | C5 | C978 | H3 | | |
| C435 | F5 | | | TP220 | A5 |
| C444 | F5 | CR551 | E4 | TP250 | A5 |
| C456 | G5 | CR688 | D3 | TP252 | D3 |
| C457 | G5 | CR689 | D4 | TP254 | D3 |
| | | CR694 | D3 | TP256 | B3 |
| C460 | F5 | CR787 | G3 | TP360 | C4 |
| C471 | C2 | CR794 | D3 | | |
| C476 | F5 | | | TP362 | C4 |
| C520 | D5 | CR881 | G3 | TP519 | A5 |
| C521 | C5 | CR882 | G4 | TP610 | E2 |
| C530 | D5 | CR883 | G4 | TP780 | G4 |
| | | | | TP782 | G3 |
| C531 | C5 | F588 | B3 | TP783 | A5 |
| C532 | E5 | | | | |
| C533 | C5 | J690 | A2 | TP819 | A5 |
| C545 | G5 | | | TP825 | A5 |
| C552 | D4 | L683 | B3 | | |
| C555 | D4 | L782 | B3 | U224A | D2 |
| | | | | U266 | E3 |
| C560 | F5 | Q352 | B3 | U352A | B3 |
| C578 | B5 | Q788 | G4 | U352B | B4 |
| C580 | B3 | Q796 | G3 | U373B | C1 |
| C596 | E5 | Q877 | H4 | U464 | F1 |
| C597 | E5 | Q878 | H3 | | |
| C622 | F5 | | | U468 | C1 |
| | | R223 | D2 | U553 | D4 |
| C624 | H5 | R259 | B3 | U688 | D3 |
| C668 | B5 | R345 | B4 | U784 | D4 |
| C678 | B5 | R346 | B4 | U890A | F3 |
| C681 | B5 | R347 | B4 | U890B | F4 |
| C692 | D3 | R350 | B4 | | |
| C694 | D3 | | | | |
| | | R351 | B4 | | |
| C721 | D5 | R352 | B4 | | |

*See parts list for earlier serial number ranges.

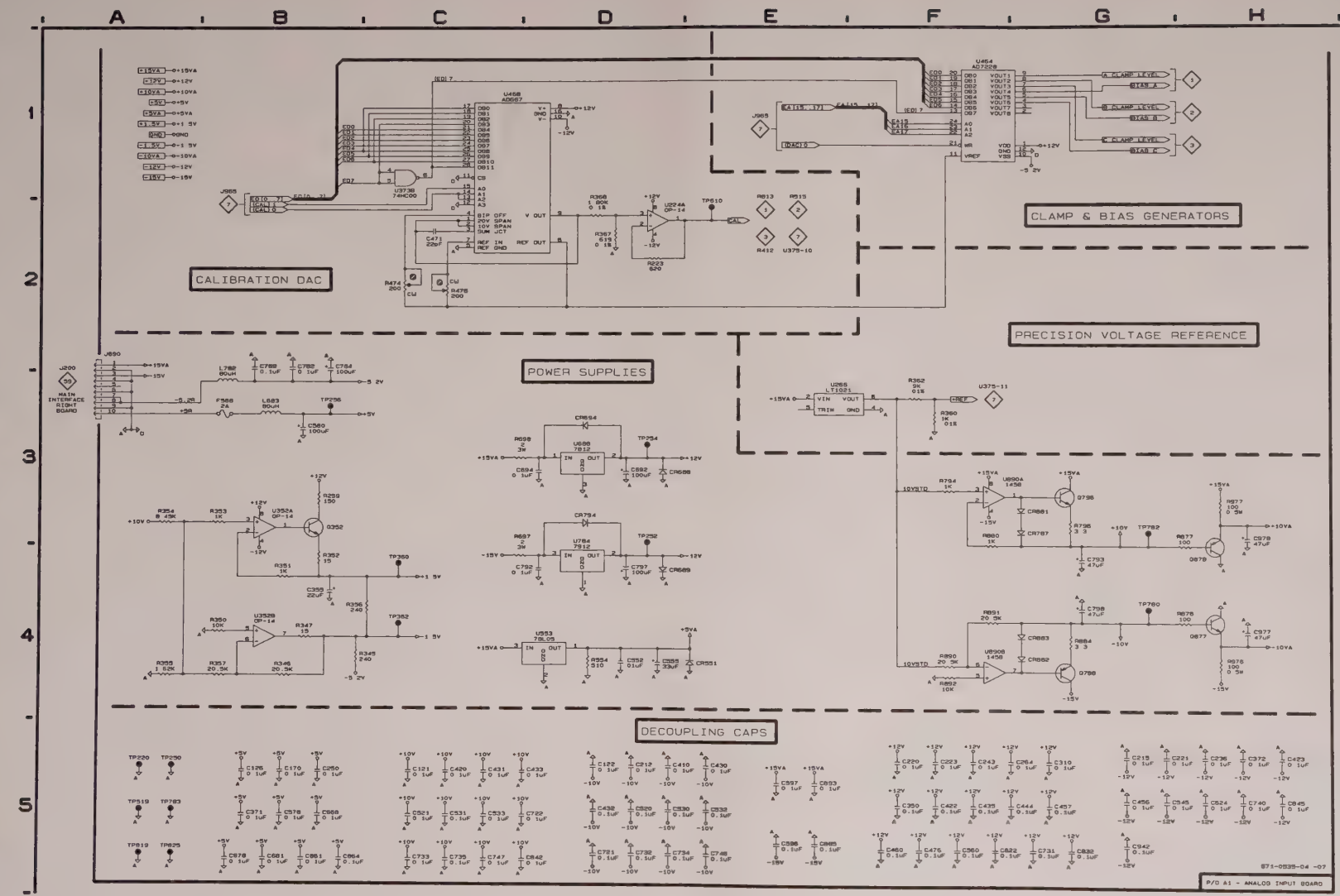
CALIBRATION DAC
CLAMP & BIAS GENERATORS
PRECISION VOLTAGE REFERENCE
POWER SUPPLIES
DECOUPLING CAPS
P/O A1 - ANALOG INPUT BOARD

## ANALOG BOARD
## Schematic <7> Look-Up Chart

The schematic diagram has an alpha-numeric grid to assist in locating parts within that diagram. The etched circuit boards follow a numbering sequence starting with the lowest number at the upper left corner, as pictured in this manual.

**ASSEMBLY A1.** *Partial Assembly A1 also shown on Schematics 1, 2, 3, 4, 5, and 6.*

| CIRCUIT NUMBER | SCHEM LOCATION |
|---|---|
| C178 | G2 |
| C179 | G1 |
| C262 | G2 |
| C271 | H2 |
| C272 | G2 |
| C373 | E4 |
| C374 | E4 |
| C375 | E3 |
| C472 | F3 |
| C473 | E3 |
| C474 | E3 |
| C475 | E3 |
| C570 | E1 |
| C571 | E1 |
| C572 | E2 |
| C573 | F2 |
| C574 | E2 |
| C575 | E1 |
| C576 | E2 |
| C577 | E2 |
| J965A | A2 |
| J965B | A4 |
| R178 | G1 |
| R262 | G2 |
| R263 | G2 |
| R268 | D3 |
| R269 | D4 |
| R274 | G2 |
| R275 | H1 |
| R276 | G1 |
| R277 | E3 |
| R278 | H2 |
| R472 | F3 |
| U264 | D3 |
| U270 | H1 |
| U278A | G1 |
| U373C | E2 |
| U375 | F3 |
| U477 | F1 |
| U676A | D1 |
| U676B | D1 |
| U676C | D2 |
| U676D | D2 |
| U772 | C4 |
| U775 | C1 |
| U873 | C4 |
| U875 | C3 |

*See parts list for earlier serial number ranges.

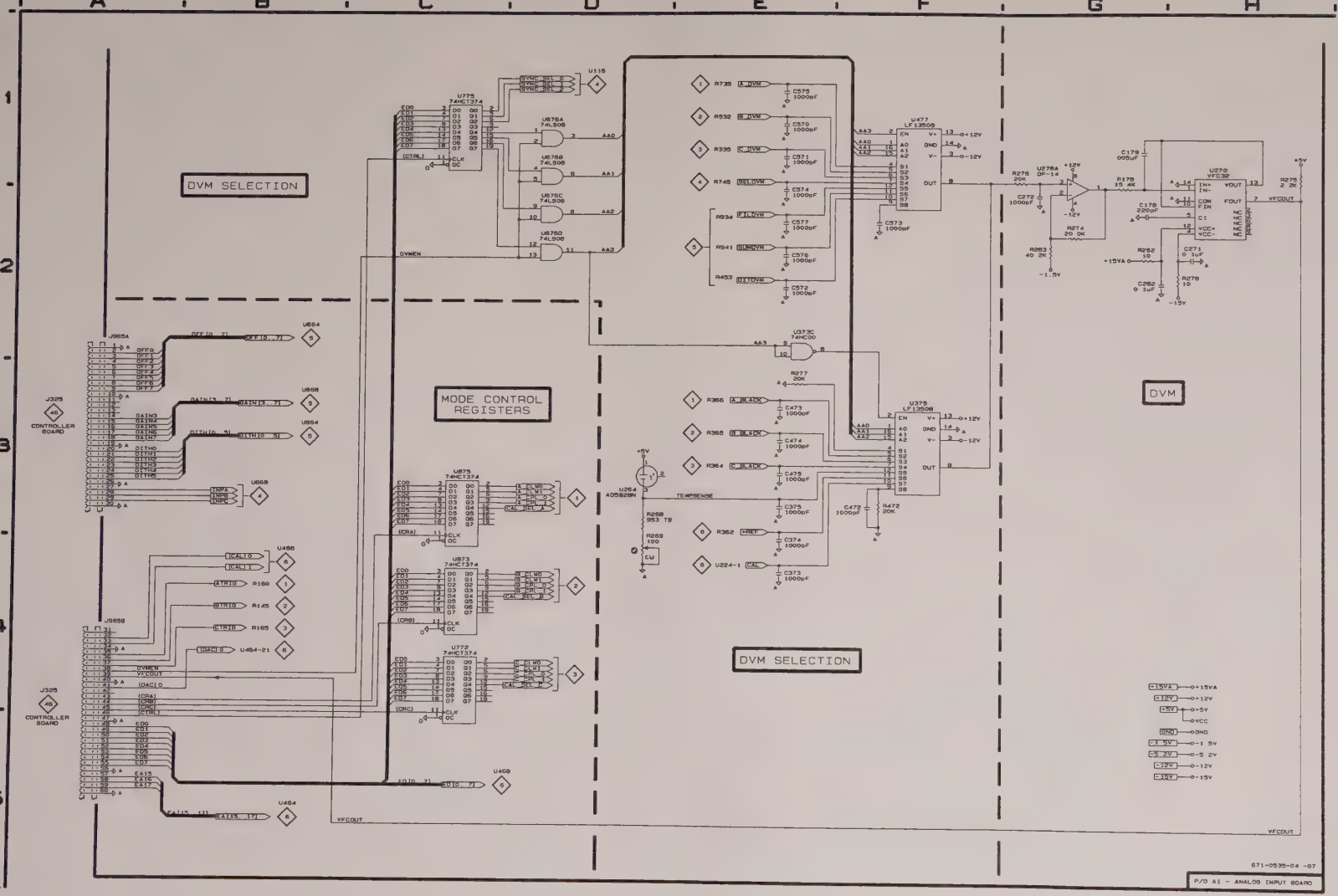
DVM SELECTION
MODE CONTROL REGISTERS
DVM
DVM SELECTION
P/O A1 - ANALOG INPUT BOARD
671-0535-04 -07

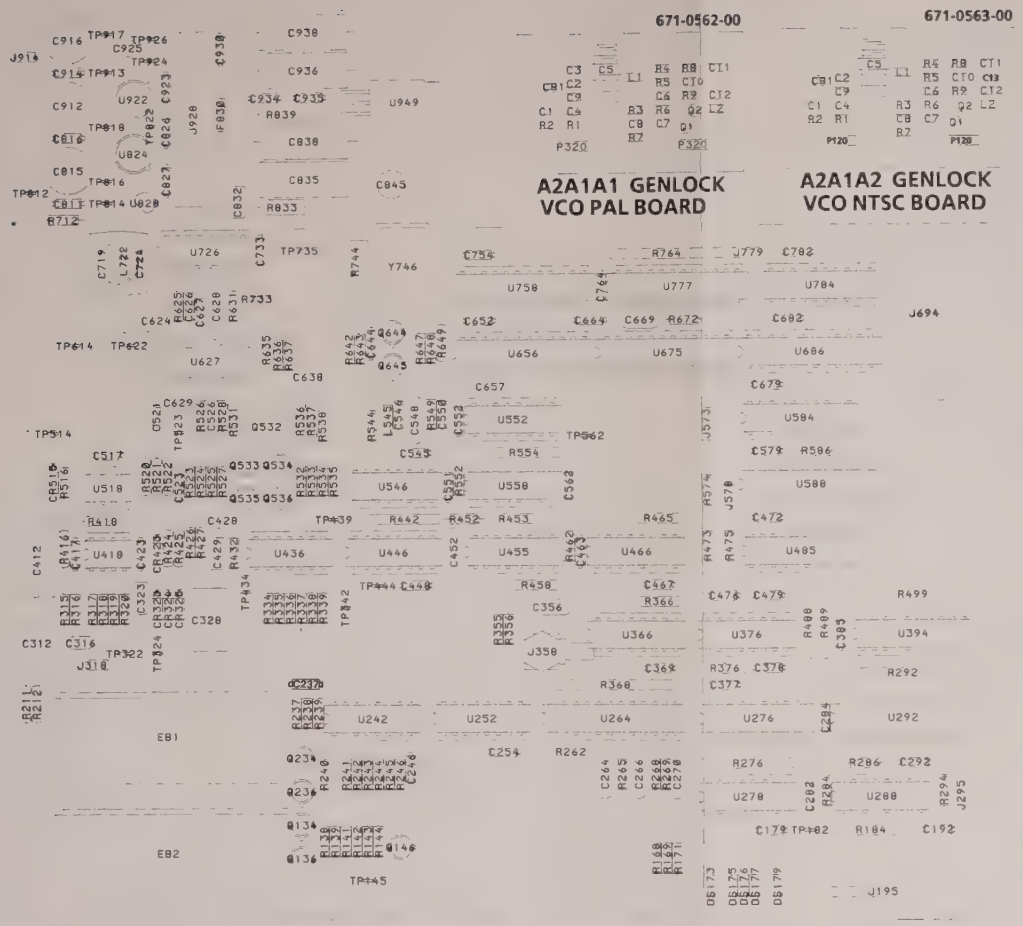


Static Sensitive Devices
*See the section in this manual on handling precautions for static sensitive components.*

## GENLOCK BOARD
## Schematic <8> Look-Up Chart

The schematic diagram has an alpha-numeric grid to assist in locating parts within that diagram. The etched circuit boards follow a numbering sequence starting with the lowest number at the upper left corner, as pictured in this manual.

**ASSEMBLY A2.** *Partial Assembly A2 also shown on Schematics 9, 10, 11, and 12.*

| CIRCUIT NUMBER | SCHEM LOCATION | CIRCUIT NUMBER | SCHEM LOCATION |
|---|---|---|---|
| C476 | F3 | U376B | F1 |
| C521 | D4 | U376D | G3 |
| C526 | D5 | U455C | D2 |
| C546 * | C1 | U466 | E1 |
| C548 * | C1 | U546A | E3 |
| C550 | C2 | U546C | E4 |
| C624 | C4 | U546D | E4 |
| C626 | C4 | U552A | E4 |
| C628 | C5 | U552B | F5 |
| C629 | D4 | U558A | E1 |
| C644 | B1 | U558C | F4 |
| C657 | E4 | U558D | F3 |
| C719 | A4 | U627 | C4 |
| C724 | B4 | U686 | H1 |
| | | U726A | D5 |
| J914 | A4 | | |
| | | U726B | A4 |
| L545 * | C1 | U726C | B4 |
| L722 | B4 | | |
| | | Y746 | B2 |
| Q644 | B1 | | |
| Q645 | B1 | | |
| R262A | D2 | | |
| R376 | F2 | | |
| R453 | C2 | | |
| R465B | F2 | | |
| R526 | D4 | | |
| R528 | D5 | | |
| R544 | E3 | | |
| R549 | A1 | | |
| R552 | C2 | | |
| R554A | F4 | | |
| R554B | F3 | | |
| R554C | F4 | | |
| R554D | F4 | | |
| R554E | F5 | | |
| R625 | B4 | | |
| R631 | C5 | | |
| R635 | C5 | | |
| R636 | D4 | | |
| R637 | D5 | | |
| R642 | B2 | | |
| R643 | B1 | | |
| R647 | B1 | | |
| R648 | C2 | | |
| R649 | E4 | | |
| R712 | A4 | | |
| R733 | B5 | | |
| R744 | B2 | | |
| TP523 | D4 | | |
| TP622 | B4 | | |
| TP735 | D4 | | |
| TP812 | A4 | | |

*See parts list for earlier serial number ranges.

## GENLOCK BOARD
## Schematic <9> Look-Up Chart

The schematic diagram has an alpha-numeric grid to assist in locating parts within that diagram. The etched circuit boards follow a numbering sequence starting with the lowest number at the upper left corner, as pictured in this manual.

**ASSEMBLY A2.** *Partial Assembly A2 also shown on Schematics 8, 10, 11, and 12.*

| CIRCUIT NUMBER | SCHEM LOCATION |
|---|---|
| C669 | C5 |
| J195 | H4 |
| J295 | F4 |
| J573 | E5 |
| J694 | A1 |
| J779 | G3 |
| R184 | G5 |
| R286 | A1 |
| R292 | C1 |
| R294 | F5 |
| R366 | D1 |
| R488 | D2 |
| R489 | D2 |
| R499 | C2 |
| R574 | F5 |
| R586 | C4 |
| R672 | C5 |
| R764 | H1 |
| U288A | G5 |
| U288B | G4 |
| U288D | G5 |
| U292 | B1 |
| U366 | D2 |
| U376A | E2 |
| U394 | C2 |
| U584 | F4 |
| U588 | C3 |
| U656 | F1 |
| U675 | D5 |
| U758 | F2 |
| U777 | G2 |
| U784 | C4 |

*See parts list for earlier serial number ranges.

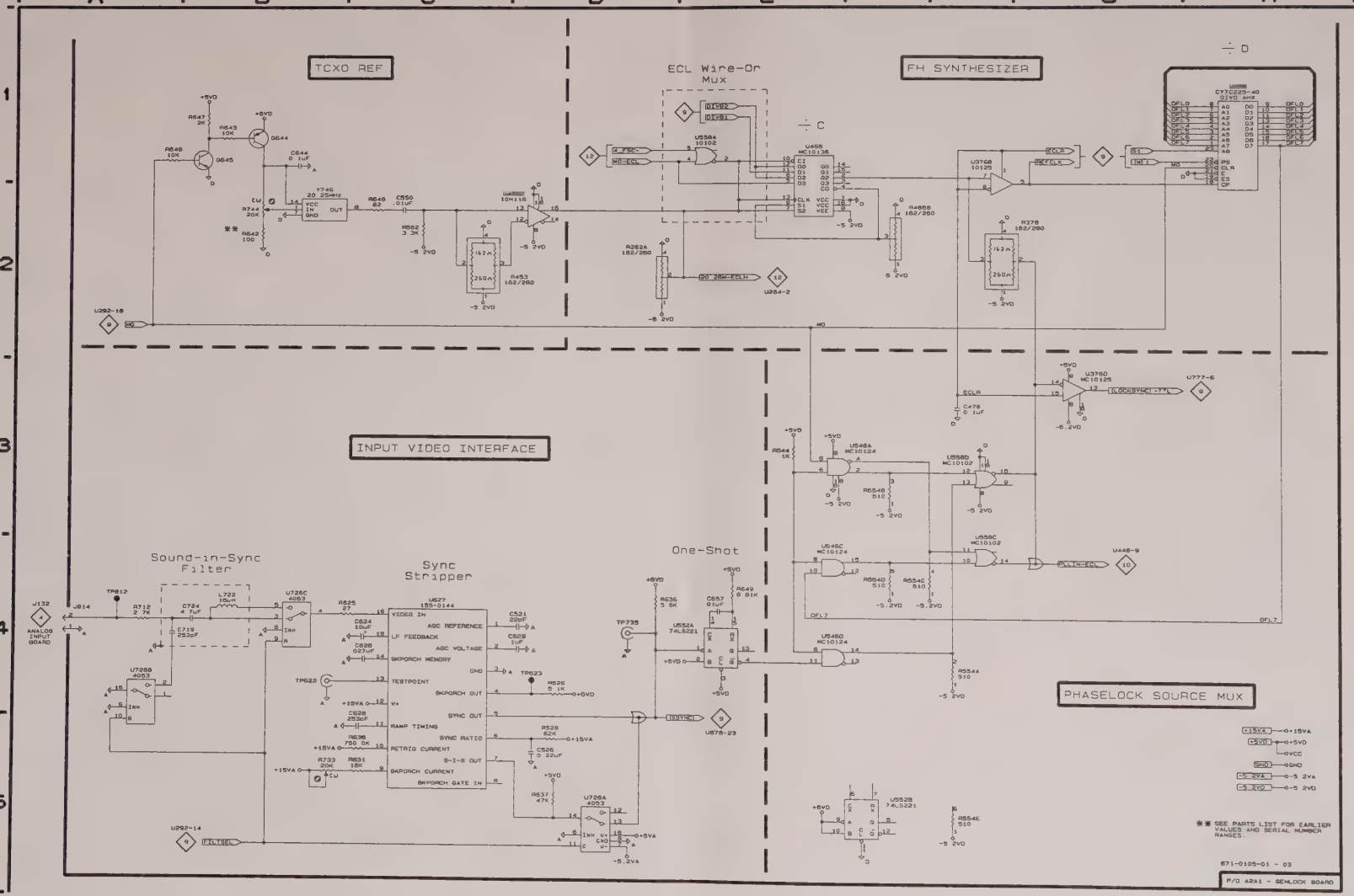
TCXO REF
ECL Wire-Or Mux
FH SYNTHESIZER
INPUT VIDEO INTERFACE
Sound-in-Sync Filter
Sync Stripper
One-Shot
PHASELOCK SOURCE MUX
** SEE PARTS LIST FOR EARLIER VALUES AND SERIAL NUMBER RANGES.
671-0105-01 - 03
P/O A2A1 - GENLOCK BOARD

## GENLOCK BOARD
## Schematic <10> Look-Up Chart

The schematic diagram has an alpha-numeric grid to assist in locating parts within that diagram. The etched circuit boards follow a numbering sequence starting with the lowest number at the upper left corner, as pictured in this manual.

**ASSEMBLY A2.** *Partial Assembly A2 also shown on Schematics 8, 9, 11, and 12.*

| CIRCUIT NUMBER | SCHEM LOCATION | CIRCUIT NUMBER | SCHEM LOCATION |
|---|---|---|---|
| C316 | H3 | R536 | C1 |
| C323 | G3 | R537 | C1 |
| C328 | E3 | R538 | C1 |
| C412 | G3 | | |
| C428 | E3 | TP322 | G3 |
| | | TP342 | B3 |
| C429 | E3 | TP434 | C2 |
| C452 | C5 | TP439 | C1 |
| C638 | C1 | TP444 | C5 |
| CR323 | G3 | U288C | A5 |
| CR324 | F4 | U418A | G2 |
| CR325 | F3 | U418B | E2 |
| CR423 | G4 | U436A | C3 |
| | | U436B | C3 |
| J318 | H3 | | |
| | | U436C | C4 |
| Q532A | C2 | U436D | H5 |
| Q532B | C1 | U436E | G5 |
| Q533 | D2 | U446A | B4 |
| | | U446B | B3 |
| Q534 | C2 | U558B | C5 |
| Q535 | D2 | | |
| Q536 | B2 | | |
| R315 | G3 | | |
| R316 | G3 | | |
| R317 | G3 | | |
| R318 | F2 | | |
| R319 | G3 | | |
| R320 | F3 | | |
| R334 | C3 | | |
| R335 | C3 | | |
| R336 | C3 | | |
| R337 | C3 | | |
| R338 | C4 | | |
| R339 | B4 | | |
| R424 | F2 | | |
| R425 | F3 | | |
| R426 | E3 | | |
| R427 | E2 | | |
| R432 | C4 | | |
| R442C | C5 | | |
| R442D | B5 | | |
| R442E | B5 | | |
| R452 | C5 | | |
| R523 | D1 | | |
| R524 | D1 | | |
| R525 | D2 | | |
| R527 | D2 | | |
| R531 | D1 | | |
| R532 | B2 | | |
| R533 | C2 | | |
| R534 | B1 | | |
| R535 | B1 | | |

*See parts list for earlier serial number ranges.

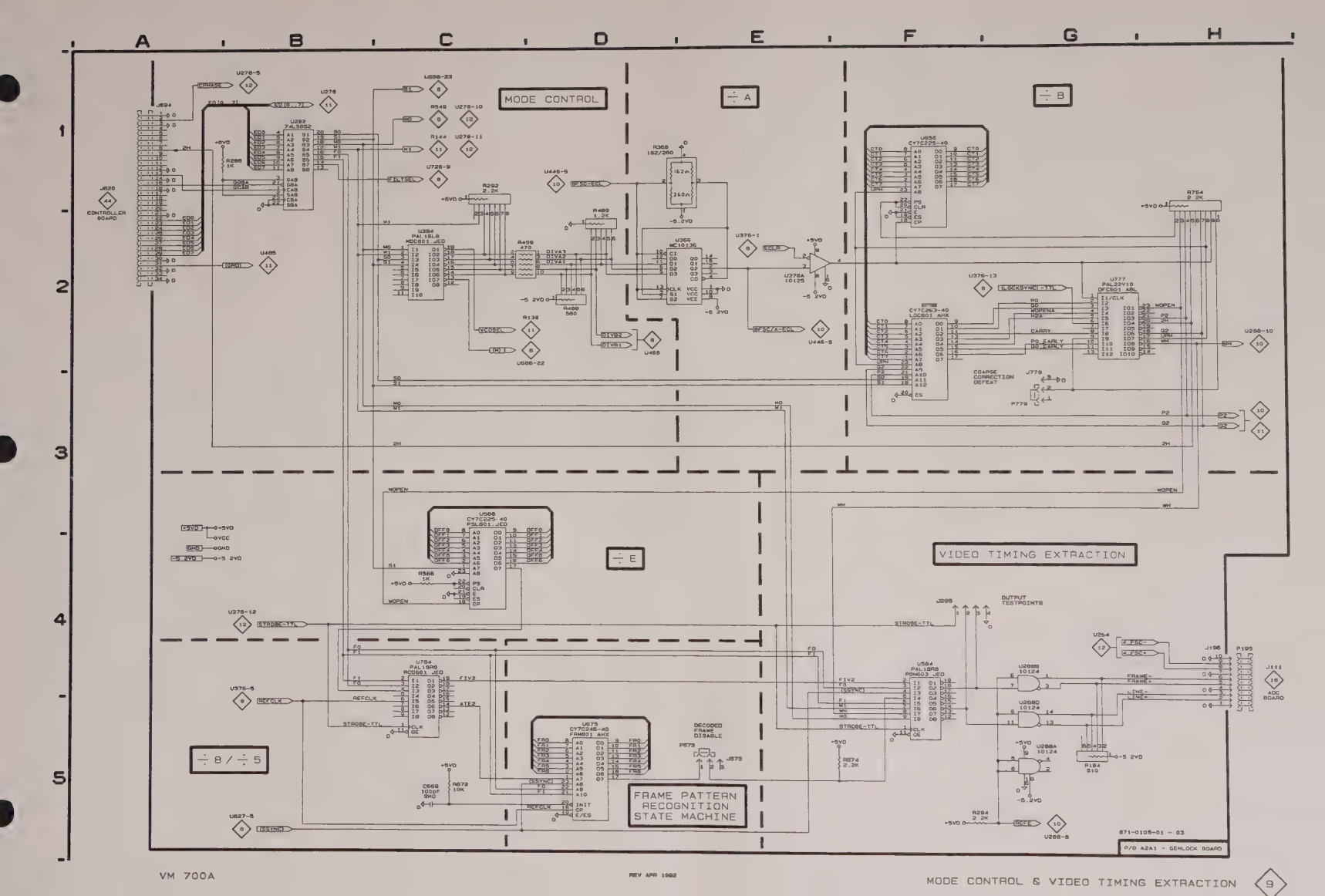
MODE CONTROL
÷ A
÷ B
÷ E
VIDEO TIMING EXTRACTION
FRAME PATTERN RECOGNITION STATE MACHINE
÷ 8 / ÷ 5
OUTPUT TESTPOINTS
DECODED FRAME DIGABLE
CONTROLLER BOARD
COARSE CORRECTION DEFEAT
P/O A2A1 - GENLOCK BOARD
871-0105-01 - 03

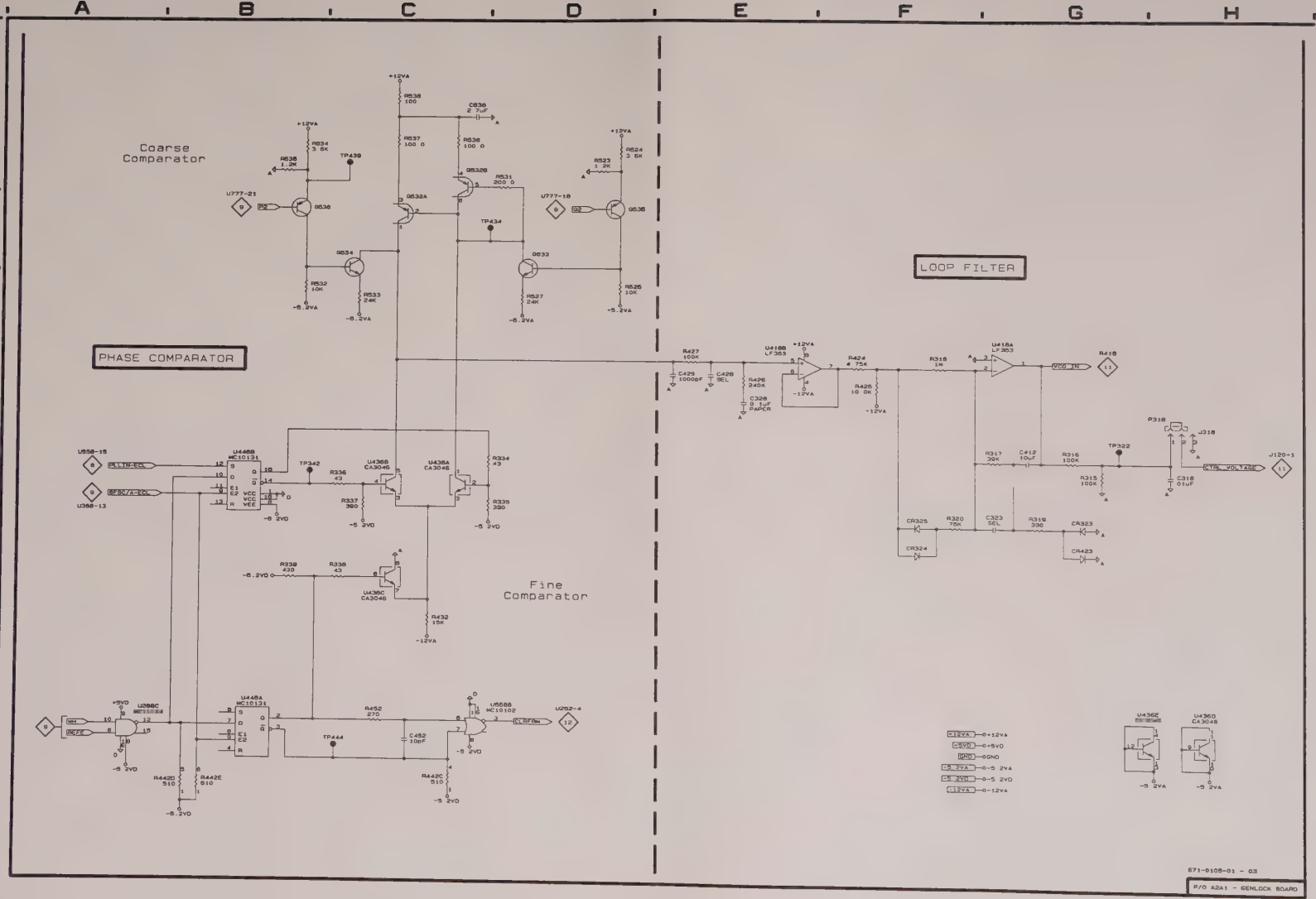


VM 700A

REV APR 1982

PHASELOCK LOOP 10

# GENLOCK BOARD
## Schematic <11> Look-Up Chart

The schematic diagram has an alpha-numeric grid to assist in locating parts within that diagram. The etched circuit boards follow a numbering sequence starting with the lowest number at the upper left corner, as pictured in this manual.

**ASSEMBLY A2.** *Partial Assembly A2 also shown on Schematics 8, 9, 10, and 12.*

| CIRCUIT NUMBER | SCHEM LOCATION | CIRCUIT NUMBER | SCHEM LOCATION | CIRCUIT NUMBER | SCHEM LOCATION |
|---|---|---|---|---|---|
| **A2A1** | | R141 | A4 | R418 | A1 |
| | | R142 | B4 | R462 | D2 |
| C312 | E4 | R143 | C4 | R473 | B1 |
| C523 | B2 | R144 | C4 | | |
| | | R168 | C3 | R475 | A3 |
| CR515 | B2 | R169 | B3 | R516 | B2 |
| | | R171 | B3 | R520 | B2 |
| DS173 | B3 | R211 | E4 | R521 | B2 |
| DS175 | B3 | | | R522 | B2 |
| DS176 | B3 | R212 | E4 | | |
| DS177 | C3 | R237 | E4 | TP514 | B2 |
| DS179 | C3 | R238 | E1 | | |
| | | R239 | D1 | U242A | C2 |
| J578 | A3 | R240 | B5 | U242B | E1 |
| | | | | U242C | E1 |
| Q134 | C5 | R241 | D2 | U276 | C3 |
| Q136 | B4 | R242 | D2 | U455B | D2 |
| Q146 | C4 | R243 | B4 | | |
| Q234 | C5 | R244 | B4 | U485 | B3 |
| Q236 | B4 | R245 | D1 | U518A | B2 |
| | | | | U518B | B2 |
| R138 | B5 | R246 | D1 | | |
| R139 | A4 | R416 | A2 | | |

| CIRCUIT NUMBER | SCHEM LOCATION | CIRCUIT NUMBER | SCHEM LOCATION | CIRCUIT NUMBER | SCHEM LOCATION |
|---|---|---|---|---|---|
| **A2A1A1** | | C11 | G1 | R3 | H2 |
| | | C12 | H1 | R4 | H2 |
| C1 | F2 | | | R5 | H2 |
| C2 | G2 | CR1 | F2 | R6 | H2 |
| C3 | G2 | | | R7 | G3 |
| C4 | G2 | L1 | G2 | | |
| C5 | G2 | L2 | H1 | R8 | H2 |
| | | | | R9 | H2 |
| C6 | H2 | Q1 | H2 | | |
| C7 | H2 | Q2 | H2 | | |
| C8 | H3 | | | | |
| C9 | G2 | R1 | F2 | | |
| C10 | H2 | R2 | F2 | | |

| CIRCUIT NUMBER | SCHEM LOCATION | CIRCUIT NUMBER | SCHEM LOCATION | CIRCUIT NUMBER | SCHEM LOCATION |
|---|---|---|---|---|---|
| **A2A1A2** | | C12 | H4 | R1 | F4 |
| | | C13 | H4 | R2 | F5 |
| C1 | F5 | | | R3 | H5 |
| C2 | G4 | CR1 | F4 | R4 | H4 |
| C4 | G4 | | | R5 | H4 |
| C5 | G4 | L1 | G4 | | |
| C6 | H5 | L2 | H4 | R6 | H5 |
| | | | | R7 | G5 |
| C7 | H5 | P120 | F4 | R8 | H4 |
| C8 | H5 | | | R9 | H4 |
| C9 | G4 | Q1 | H4 | | |
| C10 | H4 | Q2 | H4 | | |
| C11 | G4 | | | | |

*See parts list for earlier serial number ranges.

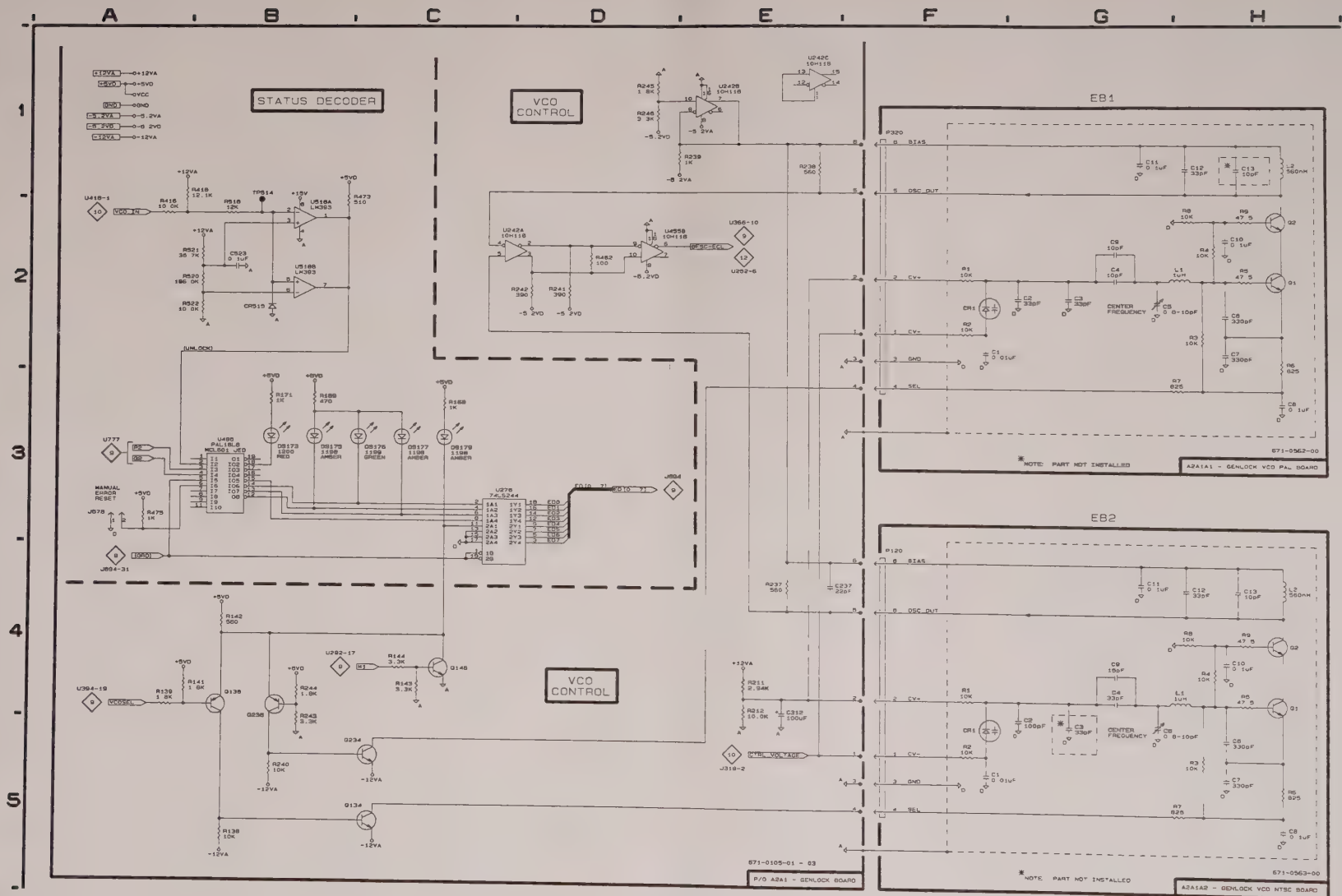
STATUS DECODER
VCO CONTROL
VCO CONTROL
EB1
EB2
671-0105-01 - 03
P/O A2A1 - GENLOCK BOARD
671-0562-00
A2A1A1 - GENLOCK VCO PAL BOARD
671-0563-00
A2A1A2 - GENLOCK VCO NTSC BOARD
*NOTE: PART NOT INSTALLED
*NOTE: PART NOT INSTALLED
CENTER FREQUENCY
CTRL VOLTAGE
MANUAL ERROR RESET
VCO IN
VCOSEL
BIAS
OSC OUT
CV+
CV-
GND
SEL

## GENLOCK BOARD
## Schematic <12> Look-Up Chart

The schematic diagram has an alpha-numeric grid to assist in locating parts within that diagram. The etched circuit boards follow a numbering sequence starting with the lowest number at the upper left corner, as pictured in this manual

**ASSEMBLY A2.** *Partial Assembly A2 also shown on Schematics 8, 9, 10, and 11.*

| CIRCUIT NUMBER | SCHEM LOCATION | CIRCUIT NUMBER | SCHEM LOCATION |
|---|---|---|---|
| C179 | F4 | C936 | B4 |
| C192 | G4 | C938 | B3 |
| C246 | G5 | | |
| C254 | G4 | F830 | B4 |
| C264 | E2 | | |
| C266 | E2 | J358 | A1 |
| | | J928 | A4 |
| C270 | E2 | | |
| C282 | F4 | R262B | B2 |
| C284 | G4 | R265 | E2 |
| C292 | G4 | R268 | E2 |
| C356 | B1 | R269 | E2 |
| C369 | G4 | R276 | E3 |
| | | R284 | D1 |
| C377 | G4 | | |
| C378 | G4 | R355 | B1 |
| C385 | G4 | R356 | B1 |
| C417 | F5 | R368A | C1 |
| C423 | H5 | R368B | G2 |
| C448 | H4 | R368C | G2 |
| | | R368D | G2 |
| C463 | H4 | | |
| C467 | F5 | R368E | G2 |
| C472 | H4 | R368F | C2 |
| C479 | H4 | R368G | G2 |
| C517 | G5 | R368H | F2 |
| C545 | F4 | R368I | C2 |
| | | R458 | B1 |
| C551 | G5 | | |
| C552 | G4 | R833 | A5 |
| C562 | G5 | R839 | B4 |
| C579 | G4 | | |
| C627 | G5 | TP145 | E4 |
| C652 | G4 | TP182 | E4 |
| | | TP324 | E4 |
| C664 | G4 | TP562 | E4 |
| C679 | H4 | TP614 | F4 |
| C682 | H4 | TP814 | D5 |
| C733 | H5 | | |
| C754 | G4 | TP816 | D4 |
| C764 | G4 | TP818 | D5 |
| | | TP822 | B4 |
| C782 | G4 | TP913 | D4 |
| C811 | C5 | TP917 | D4 |
| C815 | C5 | TP924 | D4 |
| C816 | G5 | TP926 | D3 |
| C826 | B4 | | |
| C827 | B5 | U252A | B2 |
| | | U264 | F1 |
| C832 | A5 | U278A | D2 |
| C835 | A5 | U278B | D3 |
| C838 | A4 | U278C | D2 |
| C845 | B4 | U278D | D2 |
| C912 | C5 | | |
| C914 | C4 | U376C | G1 |
| | | U455A | C1 |
| C916 | C4 | U824 | B5 |
| C923 | C4 | U828 | B5 |
| C925 | C4 | U922 | B4 |
| C930 | C3 | U949 | B4 |
| C934 | G5 | | |
| C935 | H5 | | |

*See parts list for earlier serial number ranges.

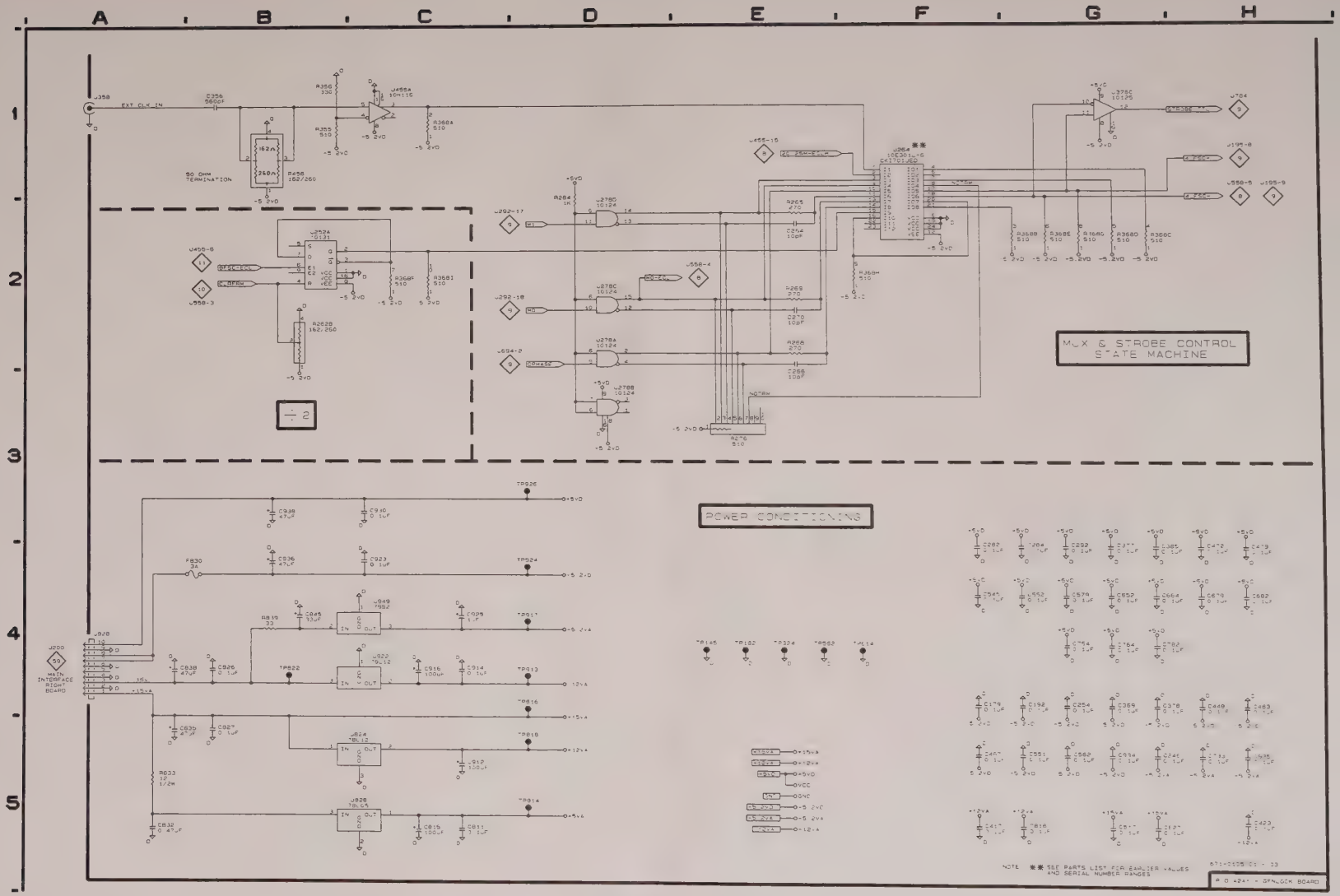
MUX & STROBE CONTROL STATE MACHINE
POWER CONDITIONING
EXT CLK IN
50 OHM TERMINATION
MAIN INTERFACE RIGHT BOARD
NOTE ** SEE PARTS LIST FOR EARLIER VALUES AND SERIAL NUMBER RANGES
P O 4241 - DENLOCK BOARD

## ADC BOARD
## Schematic <13> Look-Up Chart

The schematic diagram has an alpha-numeric grid to assist in locating parts within that diagram. The etched circuit boards follow a numbering sequence starting with the lowest number at the upper left corner, as pictured in this manual.

**ASSEMBLY A3.** *Partial Assembly A3 also shown on Schematics 14, 15, and 16.*

| CIRCUIT NUMBER | SCHEM LOCATE | CIRCUIT NUMBER | SCHEM LOCATE |
|---|---|---|---|
| A3A1 | | C337 | H4 |
| | | C348 | G4 |
| C131 | G3 | C358 | G4 |
| C144 | G3 | C368 | G4 |
| C166 | G3 | C378 | G4 |
| C186 | G3 | C384 | H4 |
| C219 | H3 | C398 | H4 |
| C239 | H3 | C445 | B3 |
| C259 | H3 | C446 | G3 |
| C268 | G4 | C453 | G3 |
| C275 | G4 | C462 | G3 |
| C279 | G4 | C463 | G3 |
| C289 | G4 | C464 | C3 |
| C327 | H4 | C468 | H4 |
| C329 | H4 | C486 | H3 |

*See parts list for earlier serial number ranges.

| CIRCUIT NUMBER | SCHEM LOCATE | CIRCUIT NUMBER | SCHEM LOCATE | CIRCUIT NUMBER | SCHEM LOCATE |
|---|---|---|---|---|---|
| C487 | C3 | C896 | E1 | R721 | D4 |
| C511 | F4 | C972 | E1 | R722 | D4 |
| C512 | E5 | C976 | B1 | R723 | D5 |
| C516 | E4 | C981 | B2 | R796 | G1 |
| C518 | F4 | C983 | B2 | R797 | G1 |
| C521 | D4 | C985 | B2 | R872 | E2 |
| C522 | D4 | C986 | C2 | R875 | D1 |
| C523 | E4 | C988 | B1 | R881 | G2 |
| C536 | H3 | C992 | D2 | R884 | G2 |
| C545 | C3 | C994 | B1 | R886 | G2 |
| C546 | H3 | | | R887 | G2 |
| C613 | F4 | CR767 | F2 | R892 | G1 |
| C614 | E4 | CR864 | F1 | R974 | C2 |
| C615 | E5 | CR888 | C2 | R975 | C2 |
| C617 | E4 | CR889 | C2 | R982 | B2 |
| C628 | E5 | | | R984 | B2 |
| C638 | G3 | F989 | B1 | R985 | B2 |
| C647 | C3 | F996 | B1 | | |
| C657 | G3 | | | TP112 | B3 |
| C662 | G3 | J419 | F5 | TP196 | C3 |
| C663 | G3 | J439 | H5 | TP595 | C3 |
| C664 | H3 | J712 | D5 | TP777 | F2 |
| C666 | H3 | J716 | D4 | TP784 | H2 |
| C668 | H3 | J995 | A1 | TP792 | C2 |
| C765 | E2 | | | TP794 | B1 |
| C766 | E2 | Q786 | G1 | TP795 | H1 |
| C771 | F2 | Q882 | G2 | TP799 | F1 |
| C785 | H2 | Q966 | C2 | TP877 | F1 |
| C787 | G1 | Q973 | C2 | TP972 | C3 |
| C793 | G1 | | | TP988 | C1 |
| C797 | G1 | R513 | F5 | | |
| C798 | E1 | R520 | F4 | U622 | E4 |
| C863 | E1 | R526 | F4 | U778 | E2 |
| C865 | E1 | R533 | D4 | U789A | G1 |
| C866 | E1 | R611 | E5 | U789B | G2 |
| C873 | E2 | R612 | E4 | U893 | E1 |
| C883 | G1 | R614 | F4 | U962 | E1 |
| C885 | G2 | R615 | E5 | U982 | B2 |
| C887 | B1 | R616 | E5 | | |
| C888 | C2 | R619 | E5 | VR515 | E4 |
| C889 | D2 | R622 | E5 | VR524 | D4 |
| C894 | E1 | R623 | E5 | | |
| C895 | E1 | R624 | D5 | | |

| CIRCUIT NUMBER | SCHEM LOCATE | CIRCUIT NUMBER | SCHEM LOCATE | CIRCUIT NUMBER | SCHEM LOCATE |
|---|---|---|---|---|---|
| A3A1A1 | | C204 | G5 | L101 | G5 |
| | | C212 | G5 | L105 | G5 |
| C100 | G5 | | | L203 | G5 |
| C114 | G5 | J110 | H5 | L211 | G5 |
| C115 | H5 | J112 | H5 | | |
| C200 | G5 | J214 | F5 | | |
| C201 | G5 | J216 | F5 | | |

| CIRCUIT NUMBER | SCHEM LOCATE | CIRCUIT NUMBER | SCHEM LOCATE | CIRCUIT NUMBER | SCHEM LOCATE |
|---|---|---|---|---|---|
| A3A1A5 | | C743 | B5 | J765 | A4 |
| | | C745 | B4 | | |
| C715 | C4 | C747 | A5 | L720 | C4 |
| C717 | C4 | C756 | B4 | L729 | C4 |
| C718 | C4 | C757 | B4 | L730 | B4 |
| C719 | C4 | C765 | B4 | L737 | B5 |
| C720 | C4 | | | L747 | B5 |
| C730 | C4 | J710 | D4 | | |
| C734 | C4 | J750 | B5 | T755 | B4 |
| C735 | C4 | J752 | B4 | T765 | B4 |
| C736 | B5 | J755 | A5 | | |
| C740 | B5 | J759 | A4 | | |

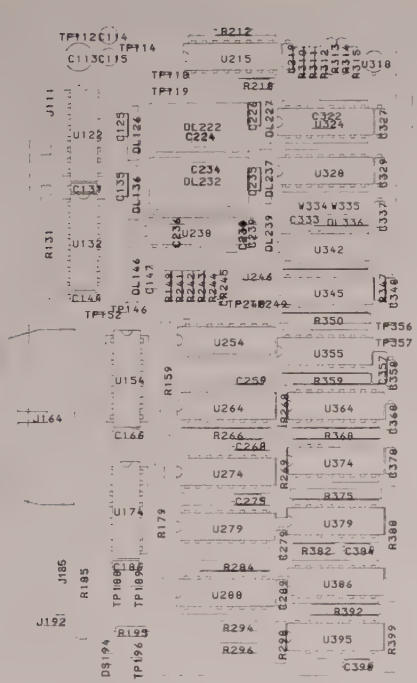

A3A1 ADC BOARD

671-0100-02

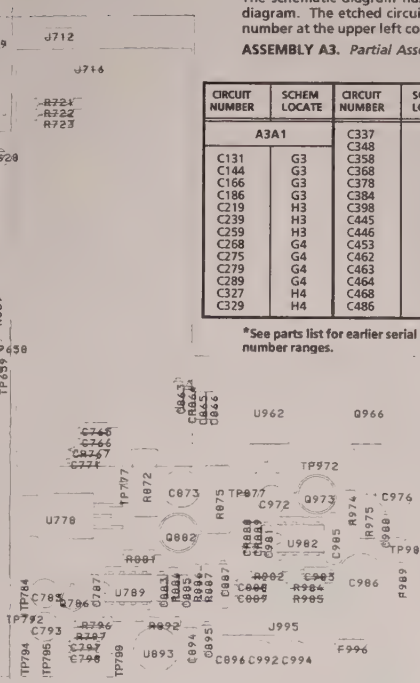

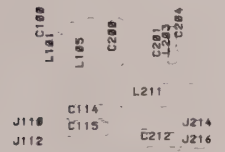

671-0110-00

A3A1A1 VIDEO DELAY LINE BOARD

Static Sensitive Devices
*See the section in this manual on handling precautions for static sensitive components.*

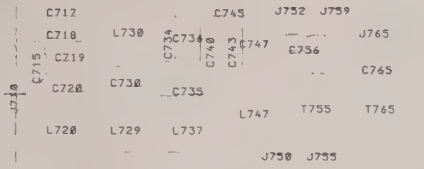

671-1510-00

A3A1A5 PAL ADC FILTER BOARD

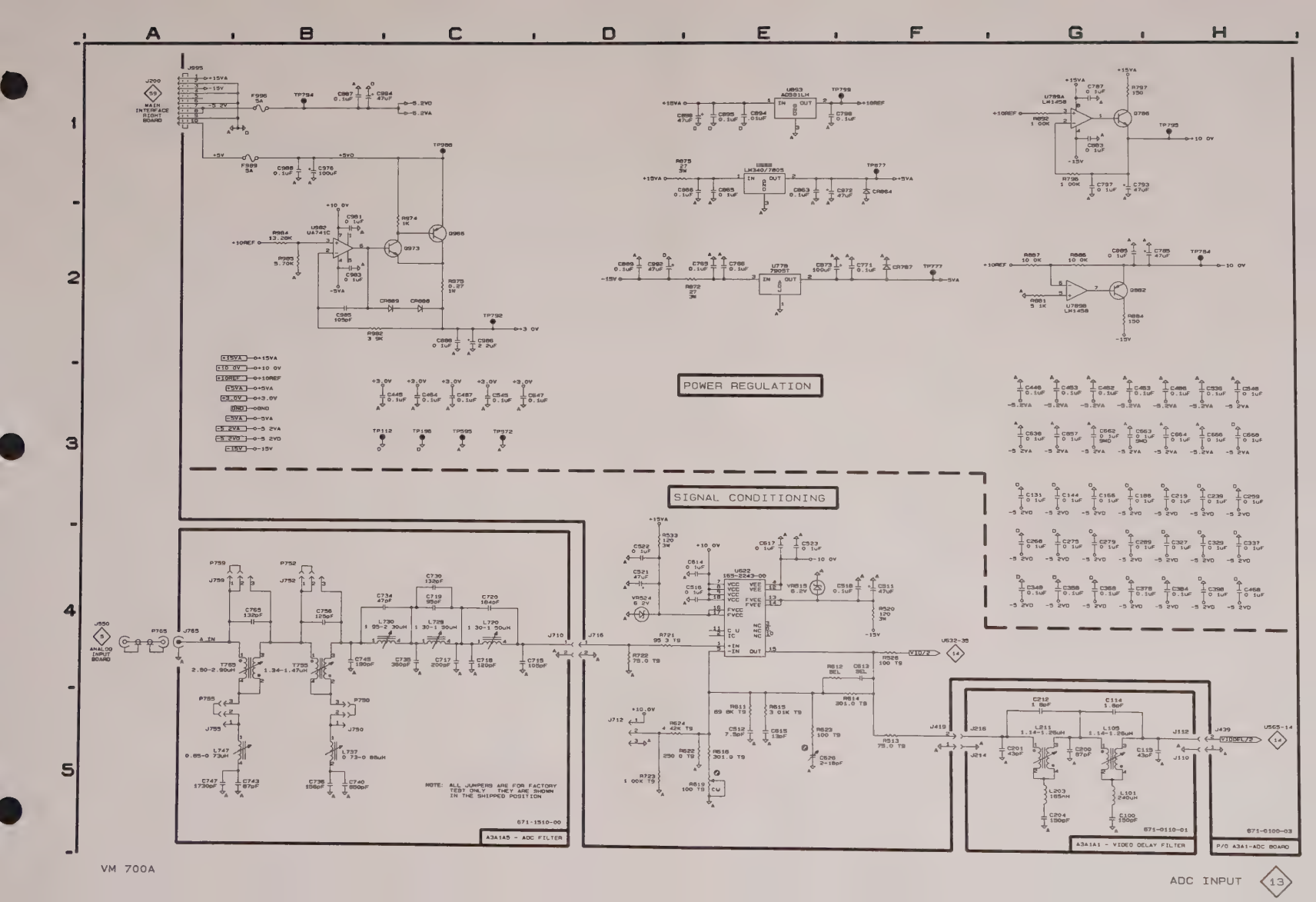
POWER REGULATION
SIGNAL CONDITIONING
A3A1A5 - ADC FILTER
A3A1A1 - VIDEO DELAY FILTER
P/O A3A1-ADC BOARD
NOTE: ALL JUMPERS ARE FOR FACTORY TEST ONLY. THEY ARE SHOWN IN THE SHIPPED POSITION
671-1510-00
671-0110-01
671-0100-03

## ADC BOARD
## Schematic <14> Look-Up Chart

The schematic diagram has an alpha-numeric grid to assist in locating parts within that diagram. The etched circuit boards follow a numbering sequence starting with the lowest number at the upper left corner, as pictured in this manual.

**ASSEMBLY A3.** *Partial Assembly A3 also shown on Schematics 13, 15, and 16.*

| CIRCUIT NUMBER | SCHEM LOCATION | CIRCUIT NUMBER | SCHEM LOCATION | CIRCUIT NUMBER | SCHEM LOCATION |
|---|---|---|---|---|---|
| A3A1 | | J448 | C1 | R686 | D2 |
| | | J480 | C4 | R687 | E1 |
| C444 | G1 | J577 | E2 | R691 | D1 |
| C488 | G2 | J635 | C2 | R695 | D1 |
| C552 | G1 | | | | |
| C556 | E2 | L675 | E2 | TP579 | E1 |
| C558 | E2 | | | TP580 | H3 |
| | | R388 | H4 | TP657 | E3 |
| C565 | F2 | R465 | F4 | TP658 | E3 |
| C566 | E2 | R535 | D4 | TP659 | E3 |
| C567 | E2 | R555 | E3 | | |
| C568 | G3 | R557 | F1 | U379 | G5 |
| C572 | F2 | | | U458 | G1 |
| | | R563 | G2 | U565 | F2 |
| C573 | G2 | R564 | F2 | U575 | F2 |
| C575 | F2 | R569 | F3 | U578 | G2 |
| C582 | G3 | R573 | G4 | | |
| C637 | D2 | R574 | F2 | U642 | D2 |
| C648 | D3 | | | U652 | F3 |
| | | R587 | D1 | U654 | E5 |
| C671 | F3 | R588 | D1 | U684 | D1 |
| C672 | F3 | R632 | C4 | | |
| C674 | E2 | R653 | E4 | VR583 | F2 |
| C677 | D2 | R658 | E4 | VR586 | F2 |
| C678 | E2 | | | | |
| | | R659 | E4 | | |
| C679 | D2 | R673 | E2 | | |
| C681 | E1 | R676 | E2 | | |
| C685 | E2 | R677 | F3 | | |

| CIRCUIT NUMBER | SCHEM LOCATION | CIRCUIT NUMBER | SCHEM LOCATION | CIRCUIT NUMBER | SCHEM LOCATION |
|---|---|---|---|---|---|
| A3A1A2 | | R113 | A3 | R213 | B3 |
| | | R114 | A3 | R214 | B3 |
| C211 | B3 | R115 | A3 | R215 | A3 |
| C212 | B3 | R116 | B3 | R216 | B3 |
| C213 | B3 | R117 | A3 | | |
| | | R118 | A3 | U116A | B2 |
| R111 | A2 | R211 | B2 | U116B | B3 |
| R112 | A3 | R212 | B3 | | |

| CIRCUIT NUMBER | SCHEM LOCATION | CIRCUIT NUMBER | SCHEM LOCATION | CIRCUIT NUMBER | SCHEM LOCATION |
|---|---|---|---|---|---|
| A3A1A3 | | R113 | A2 | R213 | B2 |
| | | R114 | A1 | R214 | B2 |
| C211 | B1 | R115 | A1 | R215 | A2 |
| C212 | B1 | R116 | B1 | R216 | B2 |
| C213 | B1 | R117 | A2 | | |
| | | R118 | A2 | U116A | B1 |
| R111 | A1 | R211 | B1 | U116B | B2 |
| R112 | A1 | R212 | B1 | | |

| CIRCUIT NUMBER | SCHEM LOCATION | CIRCUIT NUMBER | SCHEM LOCATION | CIRCUIT NUMBER | SCHEM LOCATION |
|---|---|---|---|---|---|
| A3A1A4 | | R113 | A5 | R213 | B5 |
| | | R114 | A4 | R214 | B5 |
| C211 | B4 | R115 | A4 | R215 | A5 |
| C212 | B5 | R116 | B4 | R216 | B5 |
| C213 | B5 | R117 | A5 | | |
| | | R118 | A5 | U116A | B4 |
| R111 | A4 | R211 | B4 | U116B | B5 |
| R112 | A4 | R212 | B4 | | |

*See parts list for earlier serial number ranges.

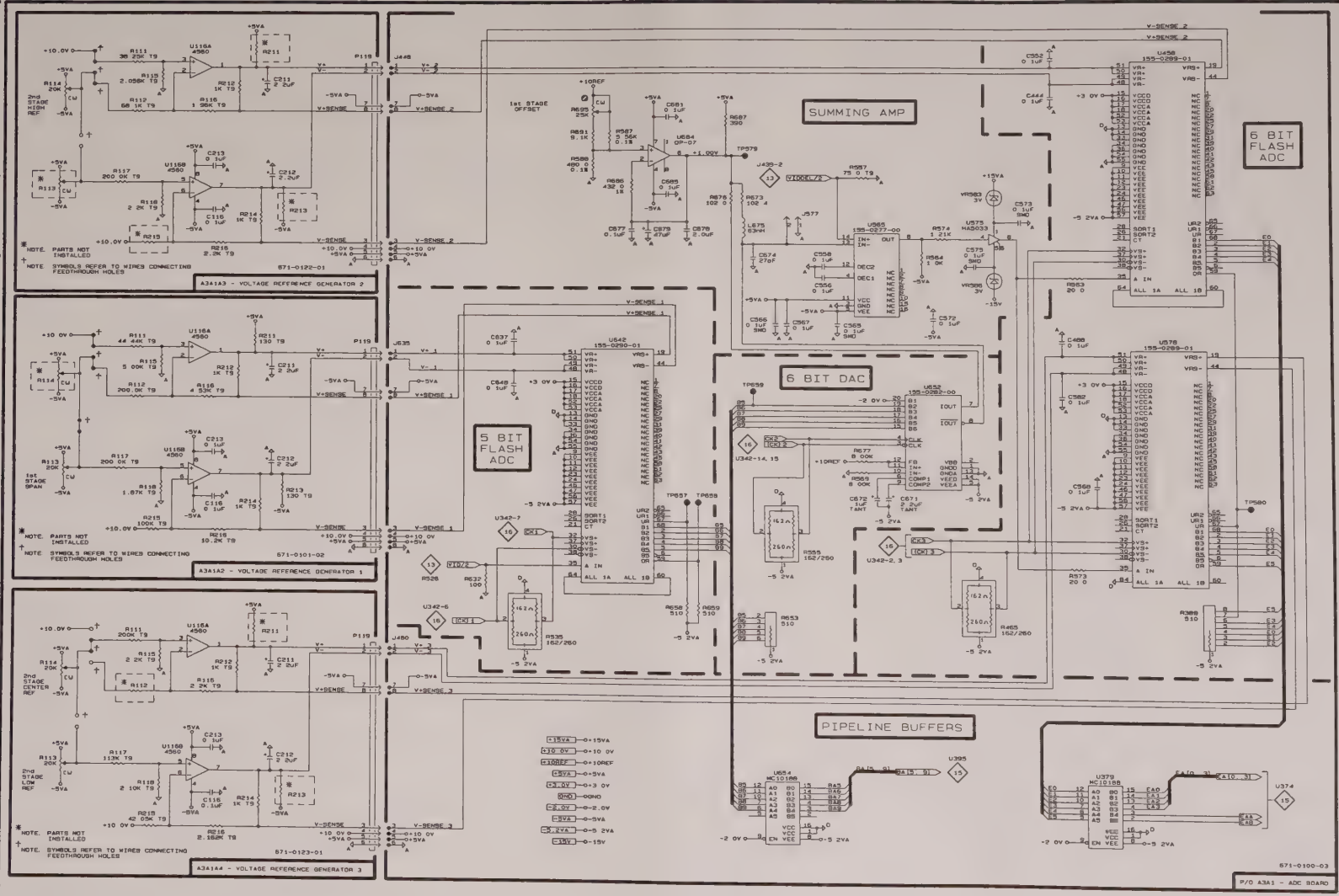
A3A1A3 - VOLTAGE REFERENCE GENERATOR 2
A3A1A2 - VOLTAGE REFERENCE GENERATOR 1
A3A1A4 - VOLTAGE REFERENCE GENERATOR 3
SUMMING AMP
6 BIT FLASH ADC
6 BIT DAC
5 BIT FLASH ADC
PIPELINE BUFFERS
P/O A3A1 - ADC BOARD

## ADC BOARD
## Schematic <15> Look-Up Chart

The schematic diagram has an alpha-numeric grid to assist in locating parts within that diagram. The etched circuit boards follow a numbering sequence starting with the lowest number at the upper left corner, as pictured in this manual

**ASSEMBLY A3.** *Partial Assembly A3 also shown on Schematics 13, 14, and 16.*

| CIRCUIT NUMBER | SCHEM LOCATION | CIRCUIT NUMBER | SCHEM LOCATION |
|---|---|---|---|
| A3A1 | | R368C | C5 |
| | | R368D | C5 |
| C357 | E3 | R368E | C5 |
| | | R368F | F5 |
| CR245 | E4 | | |
| | | R368G | F5 |
| DS194 | H3 | R375 | C3 |
| | | R382 | A4 |
| J164 | H3 | R392 | B5 |
| J185 | H2 | R399 | A5 |
| J192 | H3 | | |
| J246 | E4 | TP248 | F3 |
| | | TP249 | F3 |
| R159E | G4 | TP356 | F2 |
| R185 | G4 | TP357 | E2 |
| R195 | H3 | | |
| R244 | E4 | U254A | G4 |
| | | U254B | G4 |
| R266 | G3 | U264A | G1 |
| R268 | C3 | U264B | G1 |
| R269 | D2 | | |
| R284 | G3 | U274A | G2 |
| | | U274B | G1 |
| R294 | F5 | U279A | G3 |
| R296 | F5 | U279B | G2 |
| R298 | B5 | | |
| R347 | E3 | U288A | G3 |
| | | U288B | G3 |
| R350A | D5 | U345 | E3 |
| R350B | F3 | U355 | E4 |
| R350C | C5 | | |
| R350D | D5 | U364 | D4 |
| | | U374 | D3 |
| R350E | A2 | U386 | B4 |
| R350F | F3 | U395 | A4 |
| R350G | F3 | | |
| R359A | D5 | | |
| | | | |
| R359B | D3 | | |
| R359C | D3 | | |
| R359D | D5 | | |
| R359E | F4 | | |
| | | | |
| R359F | D5 | | |
| R359G | F4 | | |
| R368A | C5 | | |
| R368B | C5 | | |

*See parts list for earlier serial number ranges.

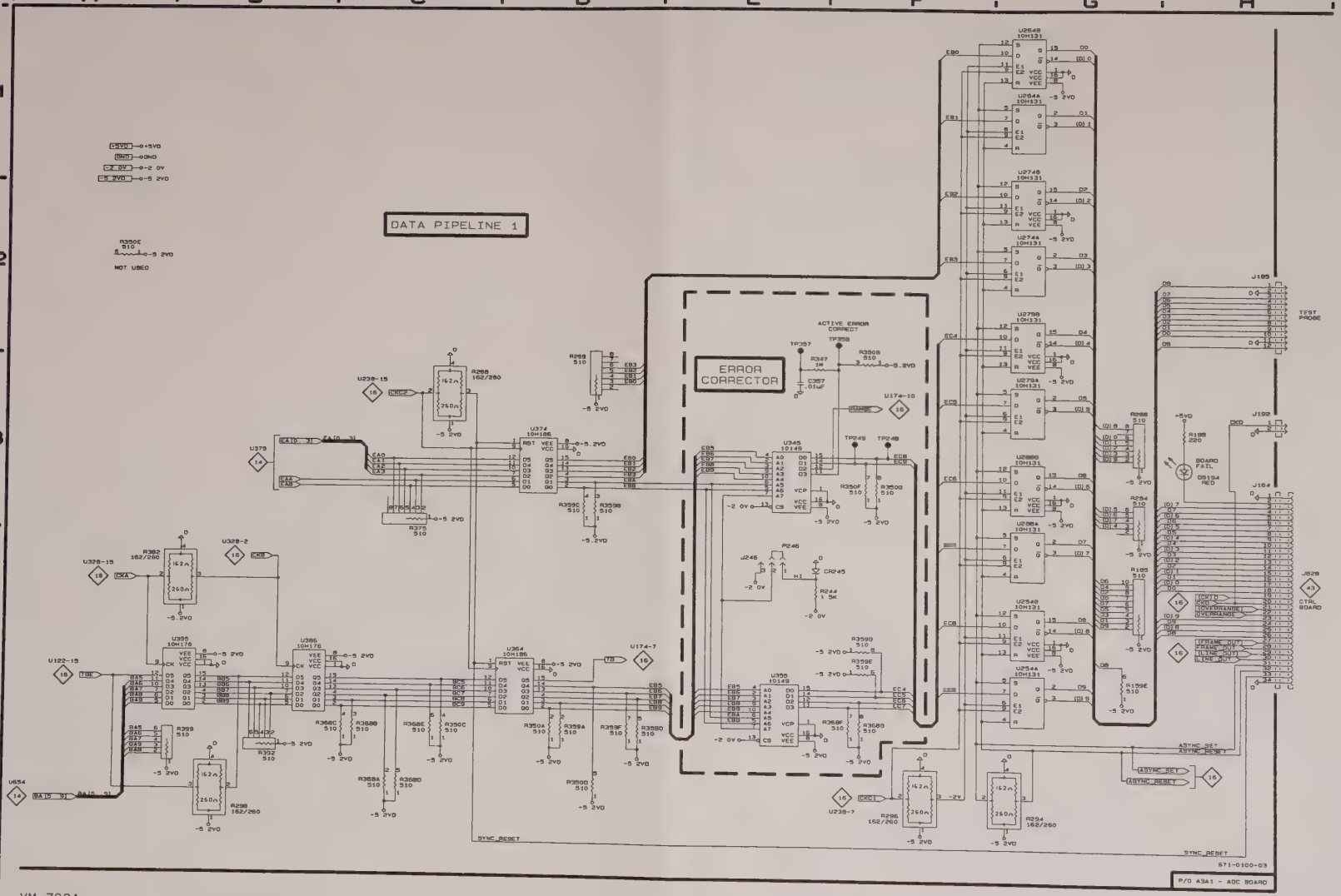
DATA PIPELINE 1
ERROR CORRECTOR
NOT USED
TEST PROBE
BOARD FAIL
CTRL BOARD
P/O A3A1 - ADC BOARD
571-0100-03
SYNC RESET
ASYNC RESET

## ADC BOARD
## Schematic <16> Look-Up Chart

The schematic diagram has an alpha-numeric grid to assist in locating parts within that diagram. The etched circuit boards follow a numbering sequence starting with the lowest number at the upper left corner, as pictured in this manual.

**ASSEMBLY A3.** *Partial Assembly A3 also shown on Schematics 13, 14, and 15.*

| CIRCUIT NUMBER | SCHEM LOCATION | CIRCUIT NUMBER | SCHEM LOCATION |
|---|---|---|---|
| A3A1 | | R242 | E4 |
| | | R243 | G4 |
| C113 | A5 | R310 | E4 |
| C114 | B5 | R311 | C4 |
| C115 | B5 | R312 | F4 |
| C125 | C5 | | |
| C135 | C5 | R313 | B5 |
| | | R314 | B5 |
| C147 | C5 | R315 | A3 |
| C224 | D5 | | |
| C226 | D5 | TP114 | B2 |
| C234 | D5 | TP118 | B1 |
| C235 | D5 | TP119 | B3 |
| | | TP146 | H4 |
| C236 | H4 | TP152 | G1 |
| C238 | E5 | | |
| C322 | E5 | TP188 | G1 |
| C333 | E5 | TP189 | G2 |
| | | | |
| DL126 | E4 | U122A | C1 |
| DL136 | B4 | U122B | C2 |
| DL146 | G4 | U132A | D1 |
| DL222 | D4 | U132B | E1 |
| DL227 | C4 | U154A | F1 |
| | | | |
| DL232 | B4 | U154B | G1 |
| DL237 | D4 | U174A | G1 |
| DL239 | G4 | U174B | G2 |
| DL336 | F4 | U215A | B2 |
| | | U215B | B1 |
| J111 | A1 | | |
| | | U215C | B2 |
| R131A | B2 | U215D | B2 |
| R131B | B1 | U238A | H4 |
| R131G | C1 | U238B | H3 |
| R131H | D1 | U238C | H3 |
| R149 | C4 | | |
| | | U318 | B5 |
| R159A | H4 | U324A | E4 |
| R159B | H1 | U324B | B3 |
| R159C | H1 | U324C | C4 |
| R159D | H4 | U328A | F4 |
| R159G | F1 | | |
| | | U328B | F4 |
| R159H | E1 | U328C | D4 |
| R179A | H2 | U342A | F3 |
| R179B | H2 | U342B | B3 |
| R179C | H2 | U342C | D3 |
| R179D | H2 | | |
| | | W334 | D3 |
| R179F | F2 | W335 | C3 |
| R179H | F2 | | |
| R212 | B2 | | |
| R218 | B1 | | |
| R241 | B3 | | |

*See parts list for earlier serial number ranges.

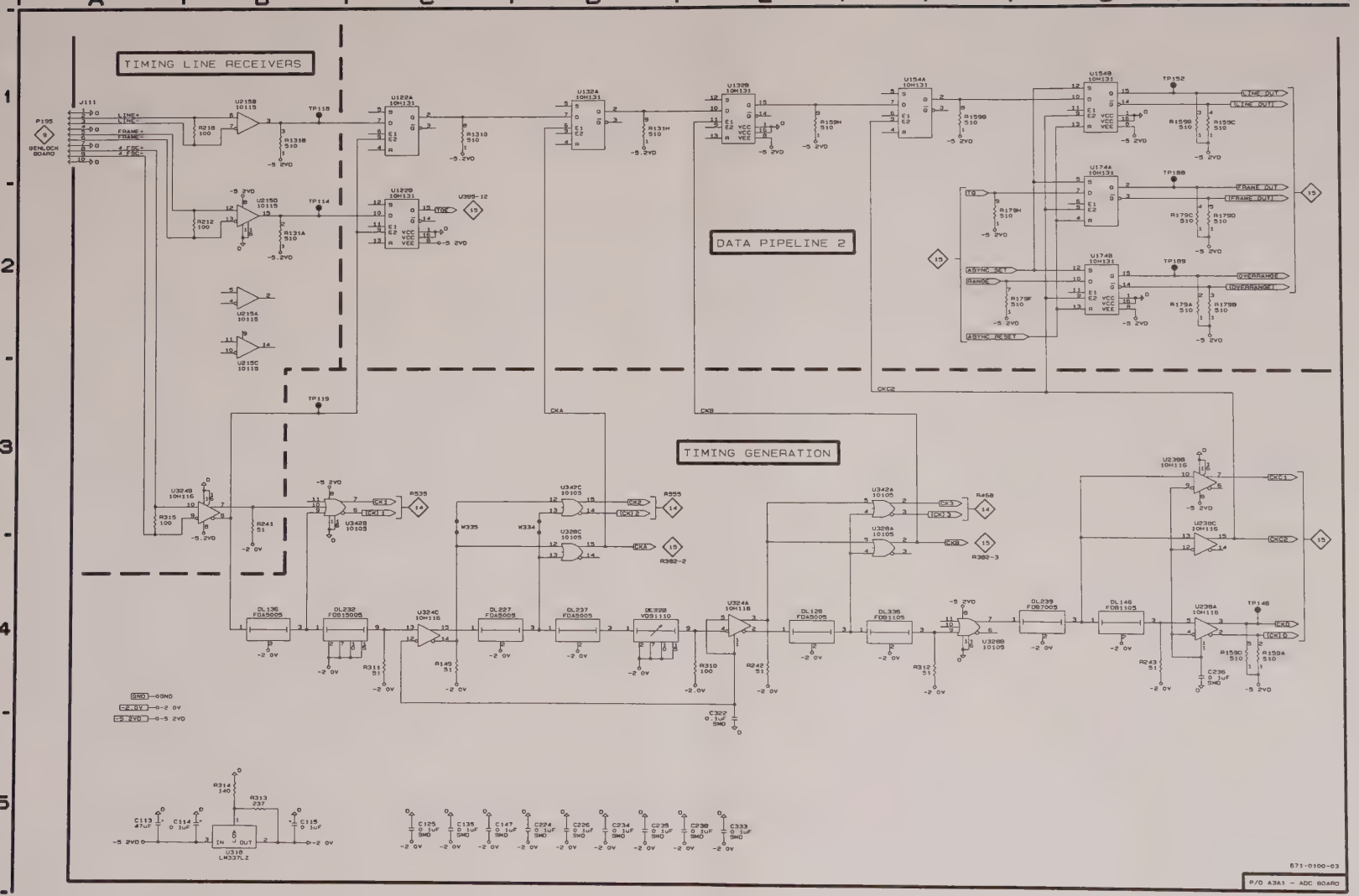
TIMING LINE RECEIVERS
DATA PIPELINE 2
TIMING GENERATION
P/O A3A1 - ADC BOARD

DATA PIPELINE 2 &
TIMING GENERATOR <16>

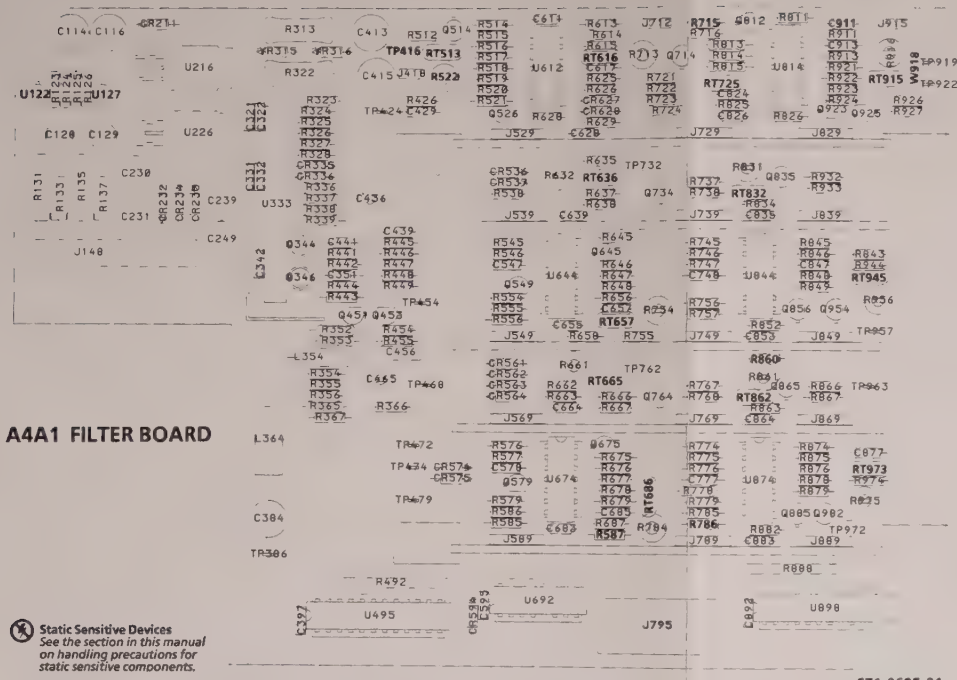

**A4A1 FILTER BOARD**

Static Sensitive Devices
*See the section in this manual on handling precautions for static sensitive components.*

671-0695-01

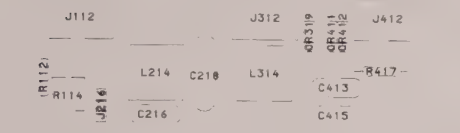

**A4A1A1 HIGH PASS FILTER BOARD** 671-0714-01

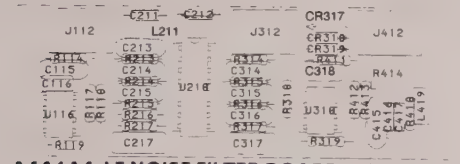

**A4A1A4 LF NOISE FILTER BOARD** 671-0716-02

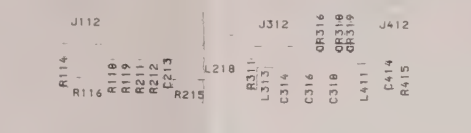

**A4A1A2 DIFF STEP FILTER BOARD** 671-0748-01

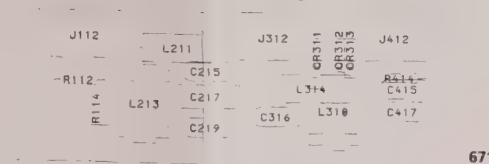

**A4A1A3 LOW PASS FILTER BOARD** 671-0715-01

## FILTER BOARD
## Schematic <17> Look-Up Chart

The schematic diagram has an alpha-numeric grid to assist in locating parts within that diagram. The etched circuit boards follow a numbering sequence starting with the lowest number at the upper left corner, as pictured in this manual.

**ASSEMBLY A4.** *Partial Assembly A4 also shown on Schematics 18 and 19.*

| CIRCUIT NUMBER | SCHEM LOCATION | CIRCUIT NUMBER | SCHEM LOCATION | CIRCUIT NUMBER | SCHEM LOCATION |
|---|---|---|---|---|---|
| C321 | H3 | R326 | G5 | R715 | D1 |
| C322 | G3 | R327 | G5 | R716 | E1 |
| C331 | H3 | R328 | G4 | R721 | C1 |
| C332 | G3 | R336 | F4 | R722 | C1 |
| C342 | G3 | R337 | F4 | R723 | C1 |
| C351 | F4 | R338 | F4 | R724 | D1 |
| C413 | G3 | R339 | G5 | R778 | B1 |
| C415 | H3 | R352 | G5 | R811 | D1 |
| C436 | F5 | R353 | F5 | R813 | D1 |
| C439 | G4 | R354 | F5 | R814 | D1 |
| C441 | F4 | R355 | E4 | R815 | E1 |
| C456 | F5 | R356 | E4 | R825 | C2 |
| C465 | F5 | R365 | G3 | R826 | D2 |
| C611 | F1 | R366 | F3 | R888 | B4 |
| C628 | F2 | R367 | E4 | R911 | C1 |
| C826 | D2 | R426 | F2 | R913 | D3 |
| C911 | D1 | R441 | F4 | R916 | D3 |
| | | R442 | F4 | R921 | C3 |
| CR335 | G4 | R443 | E4 | R922 | D3 |
| CR336 | G5 | R444 | E4 | R923 | D2 |
| CR594 | B5 | | | | |
| CR627 | E3 | R445 | G4 | R924 | D2 |
| CR628 | E2 | R446 | G4 | R926 | C3 |
| | | R447 | F4 | R927 | C3 |
| J418 | H4 | R448 | E4 | | |
| J529 | E2 | R449 | E4 | RT513 | F1 |
| J712 | C1 | | | RT616 | F3 |
| J729 | E3 | R454 | E4 | RT725 | D1 |
| J795 | A3 | R455 | E4 | RT915 | D3 |
| | | R492 | D5 | | |
| J829 | E2 | R512 | F1 | TP424 | G4 |
| J915 | A1 | R514 | F1 | TP922 | C2 |
| L354 | F5 | R515 | F1 | U333 | G3 |
| | | R516 | G1 | U495 | C5 |
| Q344 | F4 | R517 | F1 | U612A | F1 |
| Q346 | F4 | R518 | G1 | U612B | F2 |
| Q451 | E4 | R519 | F2 | U692 | B4 |
| Q453 | E4 | | | | |
| Q514 | F1 | R520 | F2 | U814A | D1 |
| | | R521 | F3 | U814B | D2 |
| Q526 | F2 | R522 | F1 | U898 | B3 |
| Q714 | D1 | R613 | F1 | | |
| Q812 | D1 | R614 | E1 | VR315 | H3 |
| Q923 | D2 | | | VR316 | G3 |
| Q925 | C2 | R615 | F3 | | |
| | | R625 | F3 | | |
| R313 | G2 | R626 | F3 | | |
| R322 | H3 | R628 | F2 | | |
| R323 | G4 | R629 | F3 | | |
| R324 | G4 | | | | |
| R325 | G4 | R713 | F3 | | |

*See parts list for earlier serial number ranges.

### *NOTE*

*See 671-0716-00 for 671-0716-01 part locations.*

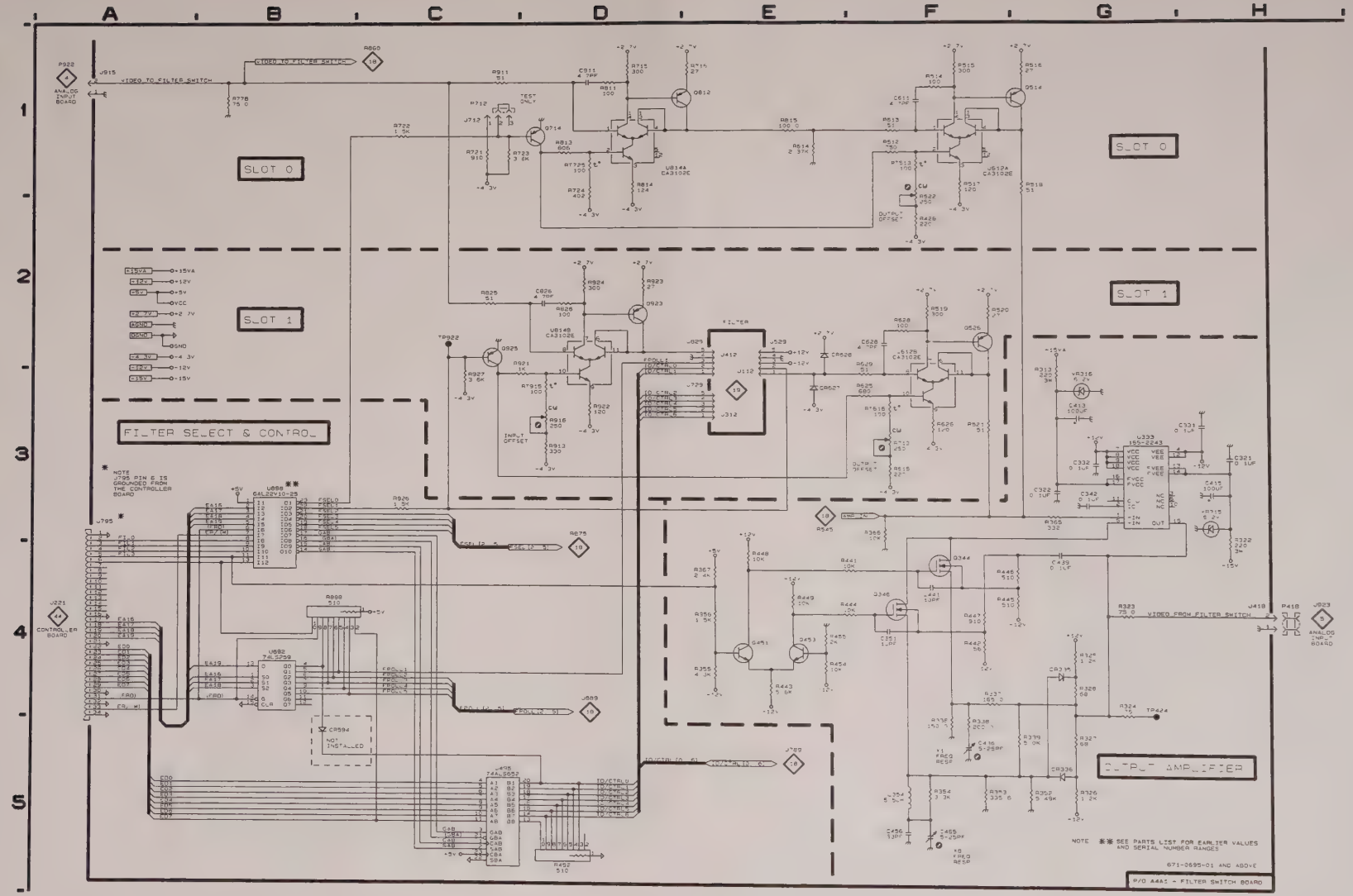
A
B
C
D
E
F
G
H
1
2
3
4
5
SLOT 0
SLOT 1
SLOT 0
SLOT 1
FILTER SELECT & CONTROL
OUTPUT AMPLIFIER
VIDEO TO FILTER SWITCH
VIDEO FROM FILTER SWITCH
+15VA
+12V
+5V
VCC
+2.7V
GND
-4.3V
-12V
-15V
NOTE
J795 PIN 5 IS GROUNDED FROM THE CONTROLLER BOARD
NOT INSTALLED
NOTE ** SEE PARTS LIST FOR EARLIER VALUES AND SERIAL NUMBER RANGES
671-0695-01 AND ABOVE
P/O A461 - FILTER SWITCH BOARD
VM700A
REV MAY 1993
FILTER SELECT & OUTPUT AMP
SN B020470 & ABOVE

## FILTER BOARD
## Schematic <18> Look-Up Chart

The schematic diagram has an alpha-numeric grid to assist in locating parts within that diagram. The etched circuit boards follow a numbering sequence starting with the lowest number at the upper left corner, as pictured in this manual.

**ASSEMBLY A4.** *Partial Assembly A4 also shown on Schematics 17 and 19.*

| CIRCUIT NUMBER | SCHEM LOCATION | CIRCUIT NUMBER | SCHEM LOCATION | CIRCUIT NUMBER | SCHEM LOCATION |
|---|---|---|---|---|---|
| C639 | G1 | R579 | E4 | R848 | B2 |
| C655 | E2 | R585 | E4 | R849 | C2 |
| C664 | G4 | R586 | E4 | R852 | C2 |
| C683 | E4 | R587 | E5 | R860 | B2 |
| C835 | E1 | R632 | G2 | R861 | E4 |
| C853 | B2 | R635 | G2 | R863 | D3 |
| C864 | E3 | | | | |
| C883 | B4 | R637 | G1 | R866 | E3 |
| | | R638 | G2 | R867 | E3 |
| CR536 | G1 | R645 | G1 | R874 | E3 |
| CR537 | G1 | R646 | G1 | R875 | B4 |
| CR561 | D2 | R647 | H1 | R876 | B4 |
| CR562 | D2 | R648 | E2 | R878 | B4 |
| CR563 | G4 | | | | |
| CR564 | G4 | R656 | E3 | R879 | C5 |
| CR574 | D5 | R658 | E2 | R882 | C4 |
| CR575 | D4 | R661 | G4 | R932 | E1 |
| | | R662 | G4 | R933 | E1 |
| J539 | F1 | R663 | G4 | R944 | B2 |
| J549 | D2 | R666 | G4 | R956 | B2 |
| J569 | F4 | | | R974 | B5 |
| J589 | D4 | R667 | G4 | R975 | B5 |
| J739 | F1 | R675 | G3 | | |
| J749 | D2 | R676 | G3 | RT636 | G2 |
| | | R677 | H3 | RT657 | E2 |
| J769 | F4 | R678 | E5 | RT665 | G4 |
| J789 | D5 | R679 | E5 | RT686 | E5 |
| J839 | F1 | | | RT832 | E1 |
| J849 | D2 | R687 | E5 | RT862 | E4 |
| J869 | F3 | R737 | E2 | RT945 | B2 |
| J889 | D4 | R738 | E1 | RT973 | B4 |
| | | R745 | D1 | | |
| Q549 | E2 | R746 | D1 | TP732 | D1 |
| Q579 | E4 | R747 | E1 | TP762 | D3 |
| Q645 | H1 | | | TP957 | B2 |
| Q675 | H3 | R754 | E3 | TP972 | B4 |
| Q734 | D1 | R755 | E3 | | |
| Q764 | D3 | R756 | C2 | U644A | G1 |
| | | R757 | B2 | U644B | E2 |
| Q835 | E1 | R767 | E4 | U674A | G4 |
| Q856 | C2 | R768 | E3 | U674B | E5 |
| Q865 | E3 | | | U844A | E1 |
| Q885 | C4 | R774 | D3 | U844B | B2 |
| Q954 | B2 | R775 | D3 | U874A | E3 |
| Q982 | B4 | R776 | E4 | U874B | B4 |
| | | R779 | B4 | | |
| R538 | G1 | R784 | E5 | | |
| R545 | H1 | R784 | B4 | | |
| R546 | E2 | | | | |
| R554 | E2 | R785 | C4 | | |
| R555 | E2 | R831 | E1 | | |
| R556 | E2 | R834 | D1 | | |
| | | R843 | B2 | | |
| R576 | H4 | R845 | E1 | | |
| R577 | E5 | R846 | B2 | | |

*See parts list for earlier serial number ranges.

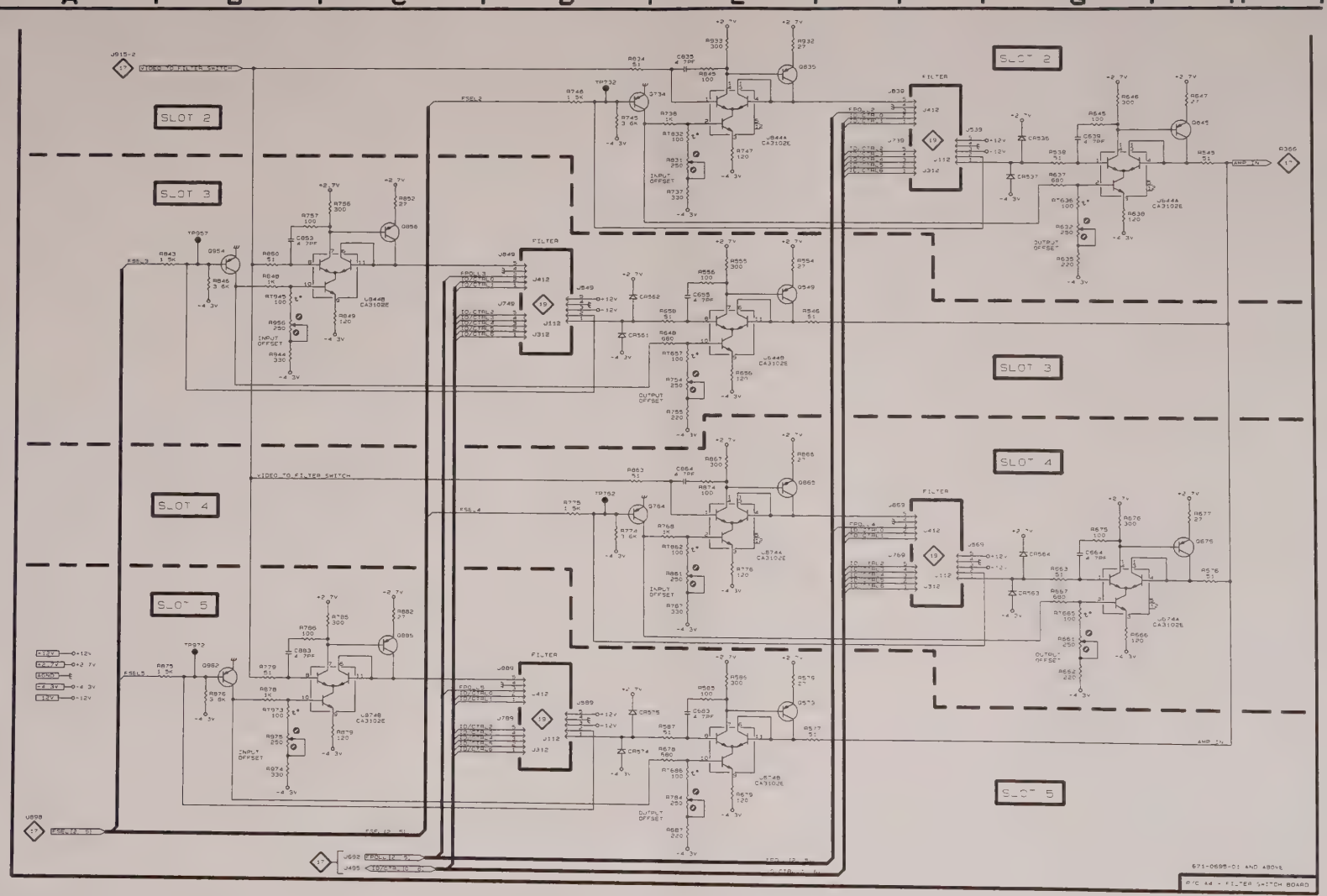


/M700A

REV MAY 1993

FILTER SLOTS 2-5

SN B020470 & ABOVE

18

# FILTER BOARD
## Schematic <19>A Look-Up Chart

The schematic diagram has an alpha-numeric grid to assist in locating parts within that diagram. The etched circuit boards follow a numbering sequence starting with the lowest number at the upper left corner, as pictured in this manual.

**ASSEMBLY A4.** *Partial Assembly A4 also shown on Schematics 17 and 18.*

| CIRCUIT NUMBER | SCHEM LOCATION |
|---|---|
| **A4A1** | |
| C114 | B2 |
| C116 | B3 |
| C128 | B2 |
| C129 | B3 |
| C230 | B3 |
| C231 | B1 |
| C239 | B1 |
| C249 | B3 |
| C384 | B3 |
| C397 | C1 |
| C429 | C2 |
| C547 | C2 |
| C578 | D2 |
| C595 | C1 |
| C617 | C2 |
| C657 | C2 |
| C685 | D2 |
| C748 | C2 |
| C777 | C2 |
| C824 | D2 |
| C847 | C3 |
| C877 | C3 |
| C892 | D1 |
| C913 | D3 |
| CR211 | C3 |
| CR232 | B3 |
| CR234 | C1 |
| CR235 | B1 |
| J148 | A2 |
| L364 | B3 |
| R123 | B2 |
| R124 | B2 |
| R125 | B2 |
| R126 | B2 |
| R131 | B2 |
| R133 | B1 |
| R135 | B3 |
| R137 | B3 |
| TP386 | C3 |
| TP416 | C3 |
| TP454 | B1 |
| TP468 | C3 |
| TP472 | B3 |
| TP474 | B3 |
| TP479 | B2 |
| TP919 | C3 |
| TP963 | D3 |
| U122 | B2 |
| U127 | B3 |
| U216 | B3 |
| U226 | B1 |
| W918 | A2 |

| CIRCUIT NUMBER | SCHEM LOCATION |
|---|---|
| **A4A1A1** | |
| C216 | B4 |
| C218 | B4 |
| C413 | B4 |
| C415 | B4 |
| CR319 | A5 |
| CR411 | A4 |
| CR412 | A4 |
| J112 | A5 |
| J216 | C4 |
| J312 | A5 |
| J412 | A4 |
| L214 | B4 |
| L314 | B4 |
| R112 | C5 |
| R114 | B5 |
| R417 | A4 |

| CIRCUIT NUMBER | SCHEM LOCATION |
|---|---|
| **A4A1A2** | |
| C213 | G5 |
| C314 | G4 |
| C316 | G4 |
| C318 | G4 |
| C414 | G4 |
| CR316 | F4 |
| CR318 | F4 |
| CR319 | F4 |
| J112 | F5 |
| J312 | F4 |
| J412 | F4 |
| L218 | H4 |
| L313 | G4 |
| L411 | G4 |
| R114 | H4 |
| R116 | H5 |
| R118 | H5 |
| R119 | G5 |
| R211 | G5 |
| R212 | H5 |
| R215 | H4 |
| R311 | G4 |
| R415 | F4 |

| CIRCUIT NUMBER | SCHEM LOCATION |
|---|---|
| **A4A1A3** | |
| C215 | E4 |
| C217 | E4 |
| C219 | E4 |
| C316 | E4 |
| C415 | D4 |
| C417 | D4 |
| CR311 | D5 |
| CR312 | D4 |
| CR313 | D4 |
| J112 | C5 |
| J312 | C5 |
| J412 | C4 |
| L211 | E4 |
| L213 | E4 |
| L314 | D4 |
| L318 | D4 |
| R112 | E5 |
| R114 | E5 |
| R414 | D4 |

| CIRCUIT NUMBER | SCHEM LOCATION |
|---|---|
| **A4A1A4** | |
| C115 | F2 |
| C116 | G3 |
| C211 | E3 |
| C212 | E3 |
| C213 | G2 |
| C214 | G2 |
| C215 | G2 |
| C217 | G2 |
| C314 | G2 |
| C315 | G1 |
| C316 | G1 |
| C317 | G1 |
| C318 | F1 |
| C415 | E2 |
| C416 | E2 |
| C417 | F2 |
| CR317 | E3 |
| CR318 | E2 |
| CR319 | E2 |
| J112 | E3 |
| J312 | E3 |
| J412 | E2 |
| L211 | G3 |
| L419 | E2 |
| R114 | G3 |
| R117 | F3 |
| R118 | F2 |
| R119 | E2 |
| R213 | G2 |
| R214 | G2 |
| R215 | G2 |
| R216 | G2 |
| R217 | F2 |
| R314 | G2 |
| R315 | G1 |
| R316 | G1 |
| R317 | G1 |
| R318 | F1 |
| R319 | E1 |
| R411 | F2 |
| R412 | E1 |
| R413 | F2 |
| R414 | F2 |
| R418 | E2 |
| U116A | F2 |
| U116B | F3 |
| U218 | H2 |
| U318A | F1 |
| U318B | E1 |

*See parts list for earlier serial number ranges.

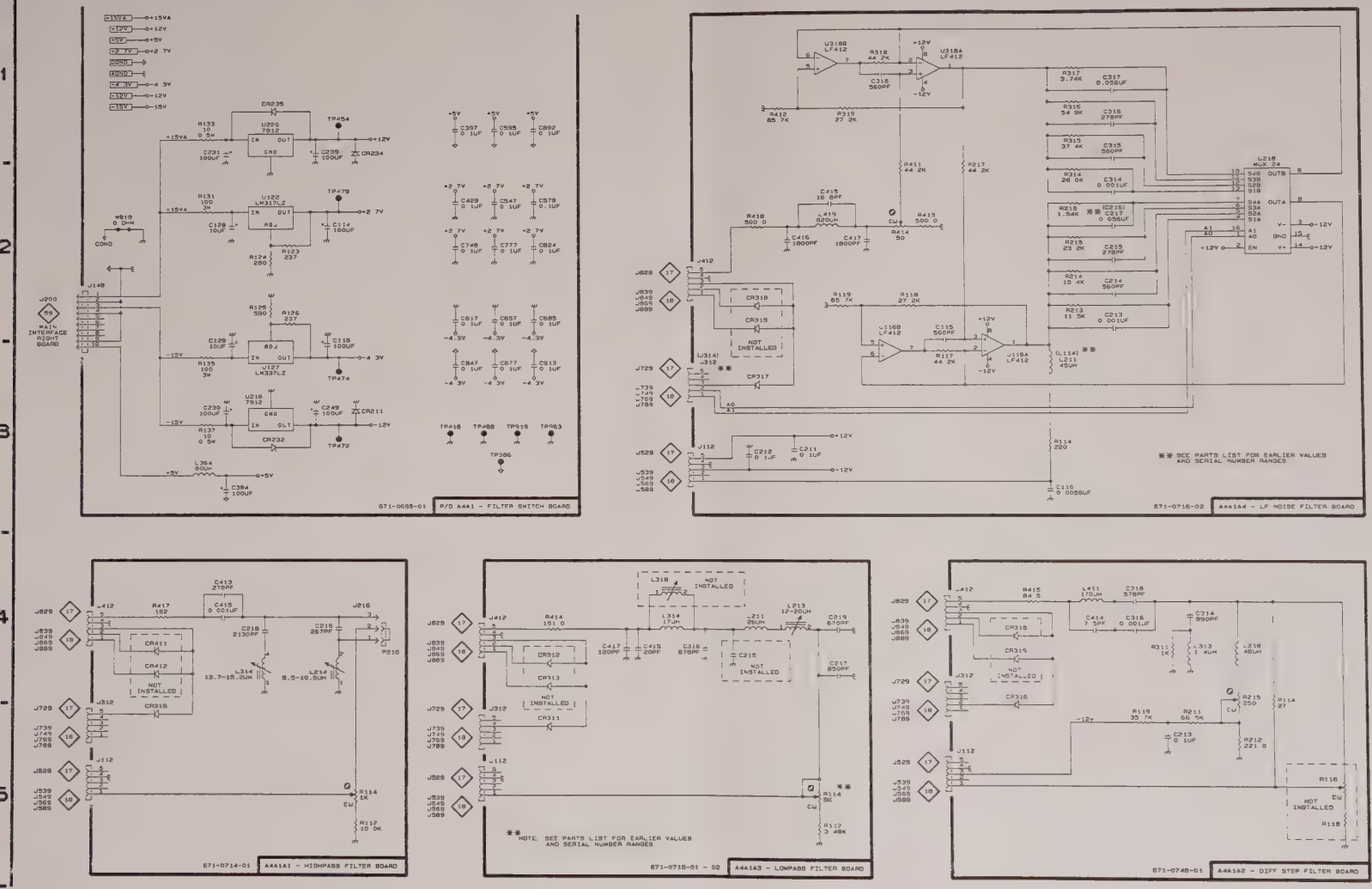
671-0695-01 P/O A4A1 - FILTER SWITCH BOARD
MAIN INTERFACE RIGHT BOARD
671-0716-02 A4A1A4 - LF NOISE FILTER BOARD
** SEE PARTS LIST FOR EARLIER VALUES AND SERIAL NUMBER RANGES
671-0714-01 A4A1A1 - HIGHPASS FILTER BOARD
671-0715-01 - 02 A4A1A3 - LOWPASS FILTER BOARD
** NOTE: SEE PARTS LIST FOR EARLIER VALUES AND SERIAL NUMBER RANGES
671-0748-01 A4A1A2 - DIFF STEP FILTER BOARD

# FILTER BOARD
## Schematic <19>B Look-Up Chart

The schematic diagram has an alpha-numeric grid to assist in locating parts within that diagram. The etched circuit boards follow a numbering sequence starting with the lowest number at the upper left corner, as pictured in this manual.

**ASSEMBLY A4.** *Partial Assembly A4 also shown on Schematics 17 and 18.*

| CIRCUIT NUMBER | SCHEM LOCATION | CIRCUIT NUMBER | SCHEM LOCATION | CIRCUIT NUMBER | SCHEM LOCATION | CIRCUIT NUMBER | SCHEM LOCATION | CIRCUIT NUMBER | SCHEM LOCATION |
|---|---|---|---|---|---|---|---|---|---|
| **A4A1** | | C429 | H4 | C892 | H3 | R124 | G4 | TP472 | G5 |
| | | C547 | H4 | C913 | H5 | R125 | G4 | TP474 | G5 |
| C114 | G4 | C578 | H4 | | | R126 | G4 | TP479 | G4 |
| C116 | G4 | C595 | H3 | CR211 | G5 | R131 | F4 | TP919 | H5 |
| C128 | F4 | C617 | H4 | CR232 | G5 | R133 | F3 | TP963 | H5 |
| C129 | F4 | C657 | H4 | CR234 | G3 | R135 | F5 | | |
| C230 | F5 | C685 | H4 | CR235 | G3 | R137 | F5 | U122 | G4 |
| C231 | F3 | C748 | H4 | | | | | U127 | G5 |
| C239 | G3 | C777 | H4 | J148 | E4 | TP386 | G5 | U216 | G5 |
| C249 | G5 | C824 | H4 | L364 | F5 | TP416 | G5 | U226 | G3 |
| C384 | F5 | C847 | H5 | | | TP454 | G3 | | |
| C397 | H3 | C877 | H5 | R123 | G4 | TP468 | H5 | W918 | F4 |

| CIRCUIT NUMBER | SCHEM LOCATION | CIRCUIT NUMBER | SCHEM LOCATION | CIRCUIT NUMBER | SCHEM LOCATION | CIRCUIT NUMBER | SCHEM LOCATION | CIRCUIT NUMBER | SCHEM LOCATION |
|---|---|---|---|---|---|---|---|---|---|
| **A4A1A1** | | C5 | C5 | CR2 | A5 | L1 | B5 | R1 | A5 |
| | | C6 | C5 | | | L2 | C5 | R2 | D5 |
| C1 | B5 | C7 | D5 | J112 | D5 | L3 | C5 | R3 | D5 |
| C2 | B5 | C8 | D5 | J312 | A5 | L4 | C5 | R5 | A5 |
| C3 | B5 | | | J412 | A5 | L5 | C5 | R6 | B5 |
| C4 | C5 | CR1 | A5 | J413 | B5 | L6 | D5 | | |

| CIRCUIT NUMBER | SCHEM LOCATION | CIRCUIT NUMBER | SCHEM LOCATION | CIRCUIT NUMBER | SCHEM LOCATION | CIRCUIT NUMBER | SCHEM LOCATION | CIRCUIT NUMBER | SCHEM LOCATION |
|---|---|---|---|---|---|---|---|---|---|
| **A4A1A2** | | C414 | B2 | J112 | C2 | L313 | B2 | R211 | B2 |
| | | | | J312 | A2 | | | R212 | B2 |
| C213 | C2 | CR316 | A2 | J412 | A2 | R114 | C2 | R215 | B2 |
| C314 | B2 | CR318 | A2 | | | R116 | C2 | R311 | B2 |
| C316 | B2 | CR319 | A2 | L411 | B2 | R118 | C2 | R415 | A2 |
| C318 | B2 | | | L218 | B2 | R119 | C2 | | |

| CIRCUIT NUMBER | SCHEM LOCATION | CIRCUIT NUMBER | SCHEM LOCATION | CIRCUIT NUMBER | SCHEM LOCATION | CIRCUIT NUMBER | SCHEM LOCATION | CIRCUIT NUMBER | SCHEM LOCATION |
|---|---|---|---|---|---|---|---|---|---|
| **A4A1A3** | | C317 | C1 | CR313 | A1 | L211 | B1 | R114 | C1 |
| | | C415 | B1 | | | L213 | C1 | R414 | A1 |
| C215 | B1 | C417 | B1 | J112 | C1 | L314 | B1 | | |
| C217 | C1 | | | J312 | A1 | L318 | B1 | | |
| C219 | C1 | CR311 | A1 | J412 | A1 | | | | |
| C316 | B1 | CR312 | A1 | | | R112 | C1 | | |

| CIRCUIT NUMBER | SCHEM LOCATION | CIRCUIT NUMBER | SCHEM LOCATION | CIRCUIT NUMBER | SCHEM LOCATION | CIRCUIT NUMBER | SCHEM LOCATION | CIRCUIT NUMBER | SCHEM LOCATION |
|---|---|---|---|---|---|---|---|---|---|
| **A4A1A4** | | C315 | G1 | J112 | H2 | R213 | F2 | R411 | E1 |
| | | C316 | G1 | J312 | D2 | R214 | F2 | R412 | E1 |
| C115 | F2 | C317 | G1 | J412 | D2 | R215 | F2 | R413 | F2 |
| C116 | G2 | C318 | E1 | | | R216 | F2 | R414 | E2 |
| C211 | G2 | C415 | E1 | L211 | F2 | R217 | F1 | R418 | E2 |
| C212 | H2 | C416 | E2 | L419 | E2 | R314 | F1 | | |
| C213 | G2 | C417 | E2 | | | R315 | F1 | U116A | F2 |
| C214 | G2 | | | R114 | G2 | R316 | F1 | U116B | E2 |
| C215 | G2 | CR317 | E2 | R117 | F2 | R317 | F1 | U218 | H1 |
| C217 | G2 | CR318 | E2 | R118 | E2 | R318 | E1 | U318A | F1 |
| C314 | G1 | CR319 | E2 | R119 | E2 | R319 | E1 | U318B | E1 |

| CIRCUIT NUMBER | SCHEM LOCATION | CIRCUIT NUMBER | SCHEM LOCATION | CIRCUIT NUMBER | SCHEM LOCATION | CIRCUIT NUMBER | SCHEM LOCATION | CIRCUIT NUMBER | SCHEM LOCATION |
|---|---|---|---|---|---|---|---|---|---|
| **A4A1A5** | | C5 | B4 | CR2 | A5 | J415 | A4 | L6 | C3 |
| | | C6 | B3 | | | L1 | B4 | | |
| C1 | B3 | C7 | B4 | J112 | C3 | L2 | B4 | R1 | A3 |
| C2 | B3 | C8 | C4 | J312 | A4 | L3 | B4 | R2 | A3 |
| C3 | B4 | | | J412 | A3 | L4 | B3 | R3 | C4 |
| C4 | B4 | CR1 | A4 | J413 | A3 | L5 | B4 | R5 | C4 |

*See parts list for earlier serial number ranges.

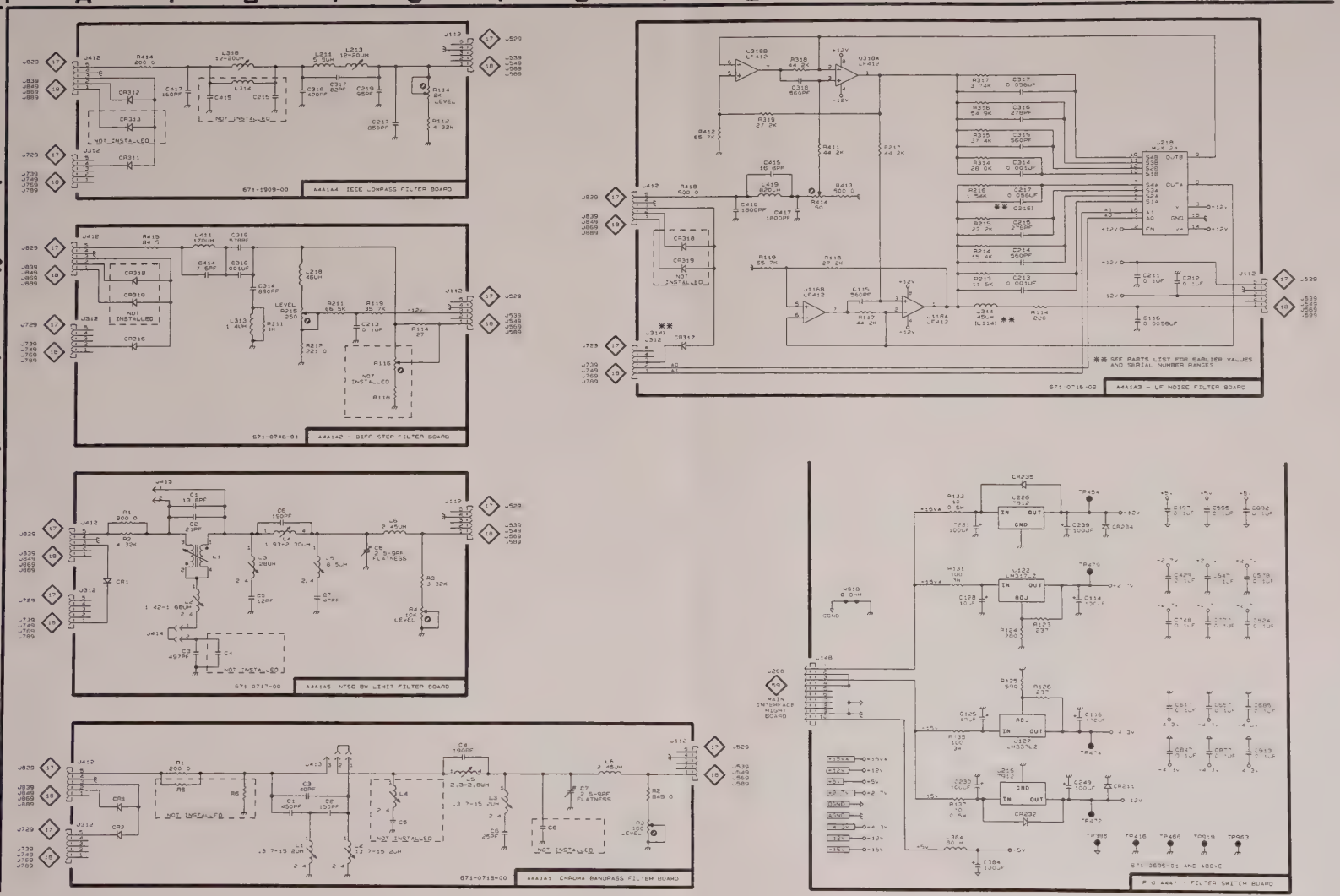
A
B
C
D
E
F
G
H
1
2
3
4
5
671-1909-00
A4A1A4 ICCC LOWPASS FILTER BOARD
671-0748-01
A4A1A2 - DIFF STEP FILTER BOARD
671-0717-00
A4A1A5 NTSC BW LIMIT FILTER BOARD
671-0718-00
A4A1A1 CHROMA BANDPASS FILTER BOARD
671-0716-02
A4A1A3 - LF NOISE FILTER BOARD
** SEE PARTS LIST FOR EARLIER VALUES AND SERIAL NUMBER RANGES
671-3695-01 AND ABOVE
P J A4A1 FILTER SWITCH BOARD
FILTER SWITCH FILTERS & POWER SUPPLY
SH 8022762 AND UP
13
B
VM 700A
REV MAY 1993

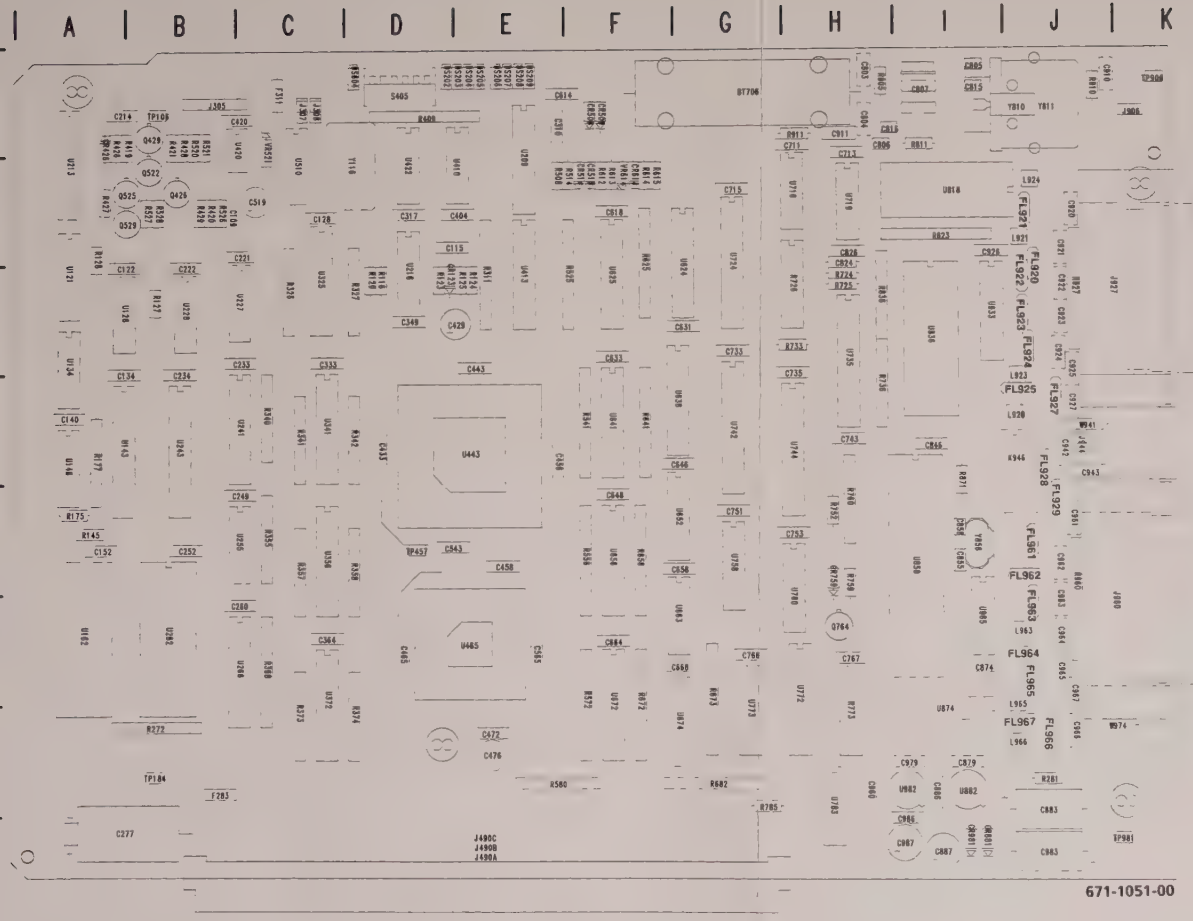


A5 CPU II BOARD

Static Sensitive Devices
*See the section in this manual on handling precautions for static sensitive components.*

## CPU BOARD
## Schematic <20> Look-Up Chart

The schematic diagram has an alpha-numeric grid to assist in locating parts within that diagram. The etched circuit boards follow a numbering sequence starting with the lowest number at the upper left corner, as pictured in this manual.

**Assembly A5.** *Partial A5 also shown on Schematics 21, 22, 23, 24, 25, 26, and 27.*

| CIRCUIT NUMBER | SCHEM LOCATION | BOARD LOCATION | CIRCUIT NUMBER | SCHEM LOCATION | BOARD LOCATION |
|---|---|---|---|---|---|
| C420 | B4 | B1 | R521 | D4 | B1 |
| C519 | B4 | C2 | R526 | C4 | B2 |
| | | | R527 | E5 | B2 |
| CR123 | B2 | D2 | R528 | E5 | B2 |
| CR426 | D5 | A1 | | | |
| CR514 | E4 | F2 | U146A | F2 | A4 |
| CR515 | E4 | F2 | U146B | F2 | A4 |
| | | | U146C | E2 | A4 |
| DS604 | D3 | D1 | U146D | F2 | A4 |
| | | | U216A | A1 | D2 |
| F311 | H4 | C1 | | | |
| | | | U216B | B1 | D2 |
| J305 | H4 | B1 | U227A | F1 | C3 |
| | | | U227B | F1 | C3 |
| Q426 | C5 | B2 | U228A | D1 | B3 |
| Q429 | D5 | B1 | U228B | F1 | B3 |
| Q522 | E4 | B2 | | | |
| Q525 | E4 | A2 | U410D | G5 | E1 |
| Q529 | E5 | A2 | U410E | G5 | E1 |
| | | | U420 | B4 | C1 |
| R116 | A1 | D3 | U422A | F5 | D1 |
| R123 | B2 | D3 | U422B | G5 | D1 |
| R124 | B2 | E3 | | | |
| R125 | B2 | E3 | U422C | D4 | D1 |
| R127 | F2 | B3 | U422D | C5 | D1 |
| | | | U422E | E5 | D1 |
| R129 | B2 | D3 | U422F | E5 | D1 |
| R177A | F2 | A4 | U443 | C1 | E4 |
| R177B | F2 | A4 | | | |
| R177C | F2 | A4 | U510A | F3 | C1 |
| R177D | F1 | A4 | U510B | E3 | C1 |
| | | | U510C | E3 | C1 |
| R311E | E4 | E2 | U510D | E3 | C1 |
| R419 | D4 | B1 | U663A | D1 | G6 |
| R420 | C5 | B2 | U716A | F5 | H2 |
| R421 | C5 | B1 | | | |
| R426 | C5 | A1 | VR521 | E5 | C1 |
| | | | | | |
| R427 | C5 | A2 | Y116 | A1 | D1 |
| R428 | C5 | B1 | | | |
| R429 | E4 | B2 | | | |
| R514 | E4 | F2 | | | |
| R520 | D5 | B1 | | | |

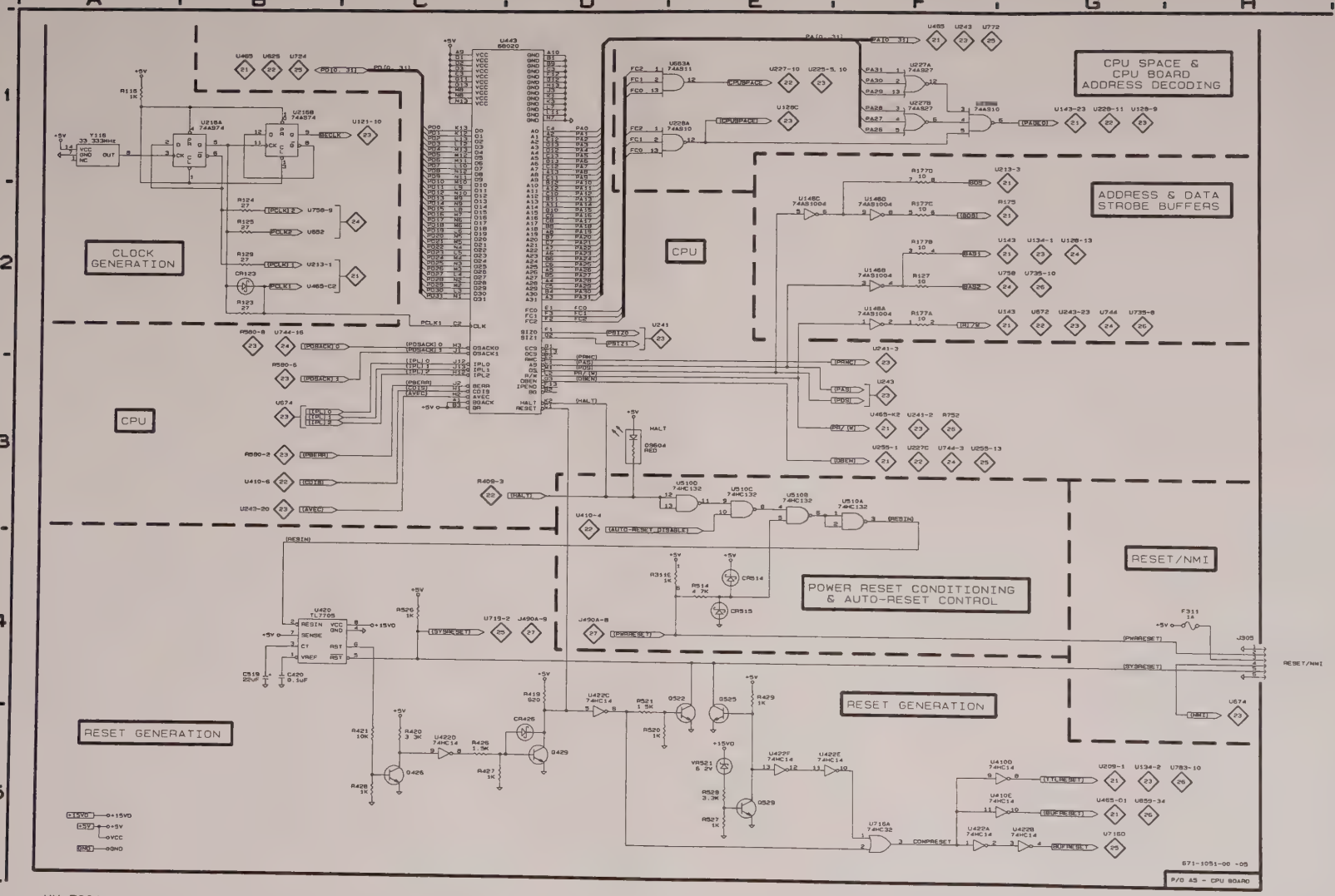
CPU SPACE & CPU BOARD ADDRESS DECODING
ADDRESS & DATA STROBE BUFFERS
CLOCK GENERATION
CPU
CPU
RESET/NMI
POWER RESET CONDITIONING & AUTO-RESET CONTROL
RESET GENERATION
RESET GENERATION
671-1051-00 -05
P/O A5 - CPU BOARD

## CPU BOARD
## Schematic <21> Look-Up Chart

The schematic diagram has an alpha-numeric grid to assist in locating parts within that diagram. The etched circuit boards follow a numbering sequence starting with the lowest number at the upper left corner, as pictured in this manual.

**Assembly A5.** *Partial A5 also shown on Schematics 20, 22, 23, 24, 25, 26, and 27.*

| CIRCUIT NUMBER | SCHEM LOCATION | BOARD LOCATION |
|---|---|---|
| DS202 | E1 | D1 |
| DS203 | F1 | E1 |
| DS204 | F1 | E1 |
| DS205 | F1 | E1 |
| DS206 | G1 | E1 |
| DS207 | G1 | E1 |
| DS208 | G1 | E1 |
| DS209 | G1 | E1 |
| R145 | D4 | A5 |
| R175 | D4 | A5 |
| R272 | D4 | B7 |
| R368 | F2 | C6 |
| U143 | C4 | A4 |
| U162 | E4 | A6 |
| U209 | E1 | E1 |
| U213 | E2 | A1 |
| U255A | D3 | C5 |
| U262 | E3 | B6 |
| U268 | E3 | C6 |
| U465 | C1 | E6 |

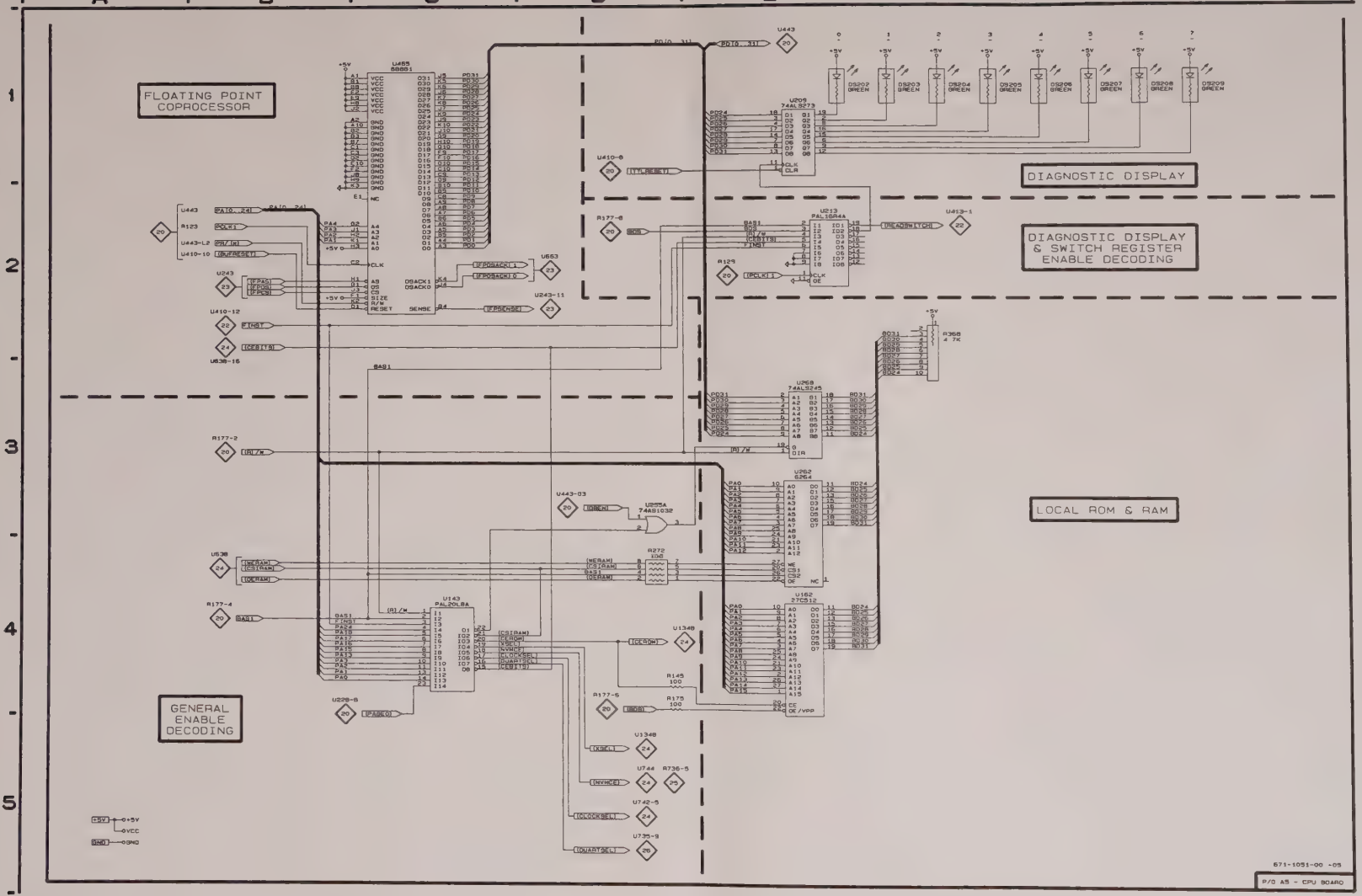
FLOATING POINT COPROCESSOR
DIAGNOSTIC DISPLAY
DIAGNOSTIC DISPLAY & SWITCH REGISTER ENABLE DECODING
LOCAL ROM & RAM
GENERAL ENABLE DECODING
671-1051-00 -05
P/O A5 - CPU BOARD

## CPU BOARD
## Schematic <22> Look-Up Chart

The schematic diagram has an alpha-numeric grid to assist in locating parts within that diagram. The etched circuit boards follow a numbering sequence starting with the lowest number at the upper left corner, as pictured in this manual.

**Assembly A5.** *Partial A5 also shown on Schematics 20, 21, 23, 24, 25, 26, and 27.*

| CIRCUIT NUMBER | SCHEM LOCATION | BOARD LOCATION |
|---|---|---|
| R311A | E3 | E2 |
| R311B | D3 | E2 |
| R311C | E3 | E2 |
| R409 | A3 | D1 |
| R525 | F1 | F2 |
| R541 | F2 | F4 |
| R556 | F3 | F5 |
| R572 | F4 | F6 |
| R615 | E2 | F2 |
| R625 | G1 | F2 |
| R641 | G2 | F4 |
| R656 | G3 | F5 |
| R672 | G4 | F6 |
| S405 | A3 | D1 |
| U227C | C1 | C3 |
| U228C | D2 | B3 |
| U410A | B3 | E1 |
| U410B | B3 | E1 |
| U410C | B4 | E1 |
| U410F | B3 | E1 |
| U413 | E4 | E2 |
| U624 | E2 | G2 |
| U625 | G1 | F2 |
| U641 | G2 | F4 |
| U656 | G3 | F5 |
| U672 | G4 | F6 |

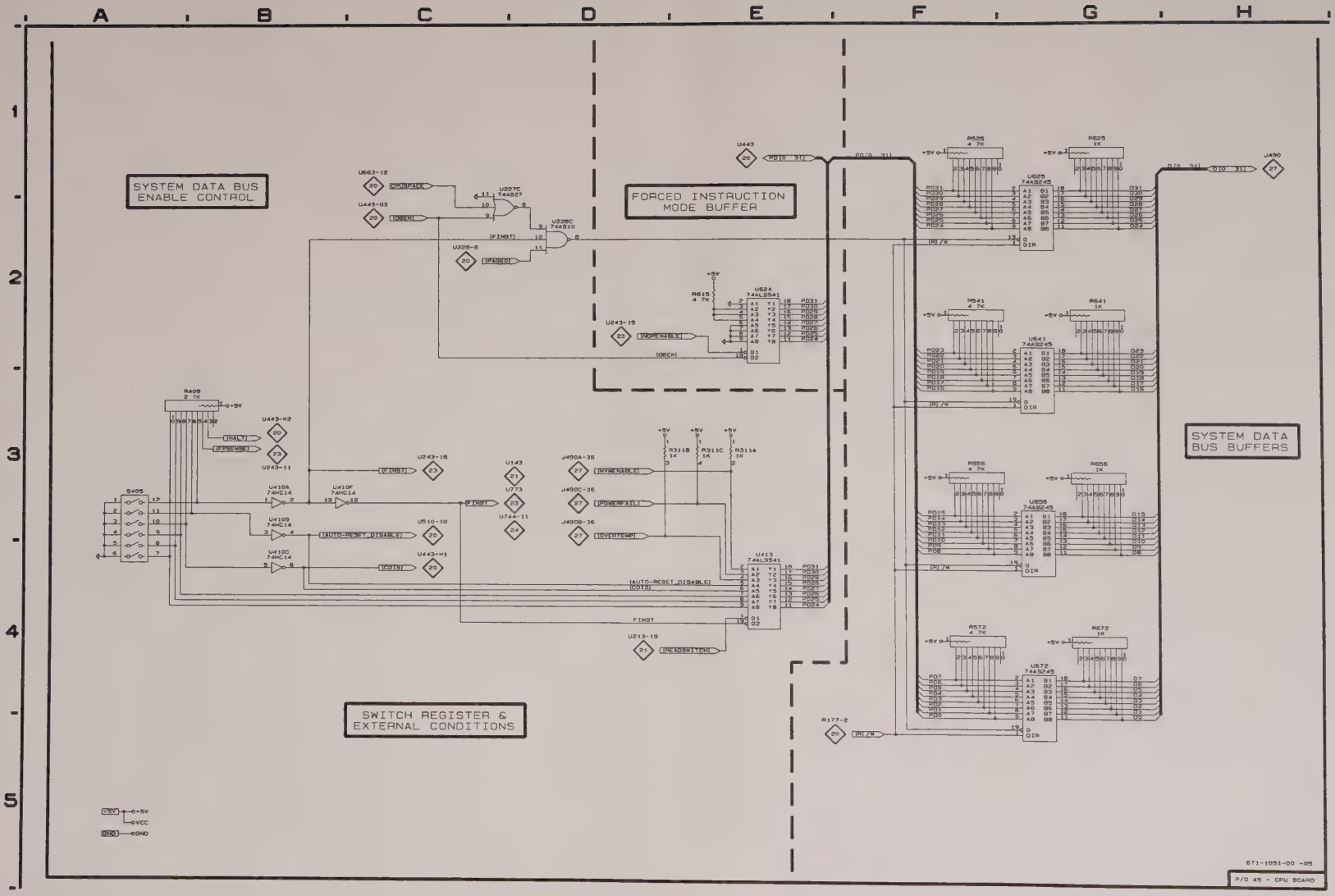
SYSTEM DATA BUS ENABLE CONTROL
FORCED INSTRUCTION MODE BUFFER
SYSTEM DATA BUS BUFFERS
SWITCH REGISTER & EXTERNAL CONDITIONS
671-1051-00 -05
P/O A5 - CPU BOARD

## CPU BOARD
## Schematic <23> Look-Up Chart

The schematic diagram has an alpha-numeric grid to assist in locating parts within that diagram. The etched circuit boards follow a numbering sequence starting with the lowest number at the upper left corner, as pictured in this manual.

**Assembly A5.** *Partial A5 also shown on Schematics 20, 21, 22, 24, 25, 26, and 27.*

| CIRCUIT NUMBER | SCHEM LOCATION | BOARD LOCATION |
|---|---|---|
| R128 | H1 | A2 |
| R311F | D2 | E2 |
| R311G | D2 | E2 |
| R311H | C5 | E2 |
| R326 | G5 | C3 |
| R327 | G5 | D3 |
| R340 | D5 | C4 |
| R341 | G5 | C4 |
| R342 | G4 | D4 |
| R355 | D5 | C5 |
| R357 | G4 | C5 |
| R358 | G4 | D5 |
| R373 | G4 | C6 |
| R374 | G3 | D6 |
| R580 | F3 | E7 |
| R673 | E2 | G6 |
| R682 | D1 | G7 |
| U121 | G2 | A2 |
| U128A | H1 | A3 |
| U128B | E3 | A3 |
| U128C | D3 | A3 |
| U134A | F2 | A3 |
| U146E | G2 | A4 |
| U146F | H1 | A4 |
| U241 | D5 | C4 |
| U243 | D3 | B4 |
| U255B | D4 | C5 |
| U255C | D5 | C5 |
| U325 | F5 | C3 |
| U341 | F4 | C4 |
| U356 | F4 | C5 |
| U372 | F3 | C6 |
| U663B | D2 | G6 |
| U663C | D2 | G6 |
| U674 | D1 | G7 |
| U773 | E3 | G6 |

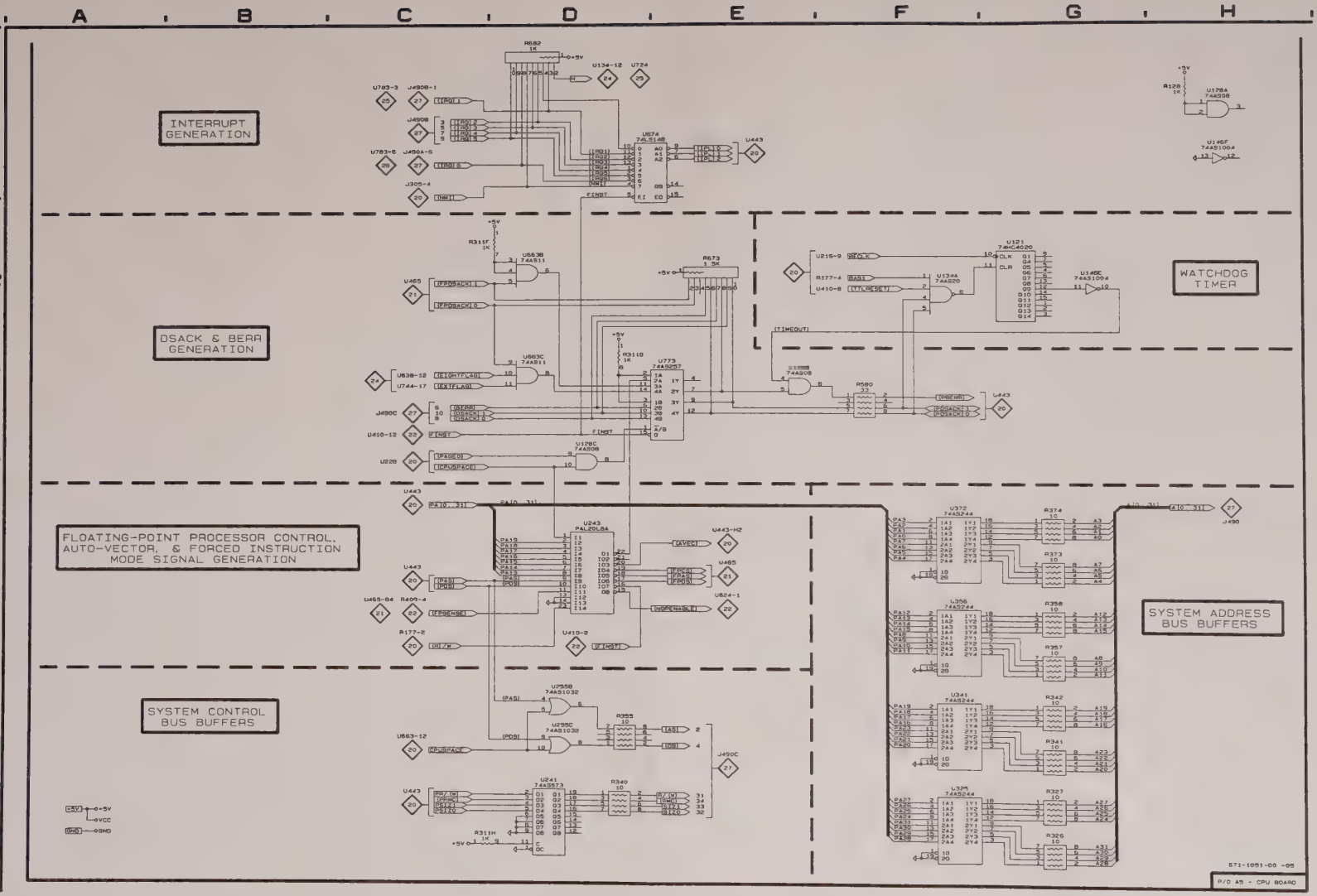
INTERRUPT GENERATION
DSACK & BERR GENERATION
FLOATING-POINT PROCESSOR CONTROL, AUTO-VECTOR, & FORCED INSTRUCTION MODE SIGNAL GENERATION
SYSTEM CONTROL BUS BUFFERS
WATCHDOG TIMER
SYSTEM ADDRESS BUS BUFFERS
A B C D E F G H
1 2 3 4 5
671-1051-00 -05
P/O A5 - CPU BOARD

## CPU BOARD
## Schematic <24> Look-Up Chart

The schematic diagram has an alpha-numeric grid to assist in locating parts within that diagram. The etched circuit boards follow a numbering sequence starting with the lowest number at the upper left corner, as pictured in this manual.

**Assembly A5.** *Partial A5 also shown on Schematics 20, 21, 22, 23, 25, 26, and 27.*

| CIRCUIT NUMBER | SCHEM LOCATION | BOARD LOCATION |
|---|---|---|
| U128D | C4 | A3 |
| U134B | C4 | A3 |
| U638 | E3 | G4 |
| U652 | D4 | G5 |
| U742 | E2 | G4 |
| U744 | F1 | H4 |
| U758 | D5 | G5 |
| U760 | G2 | H5 |

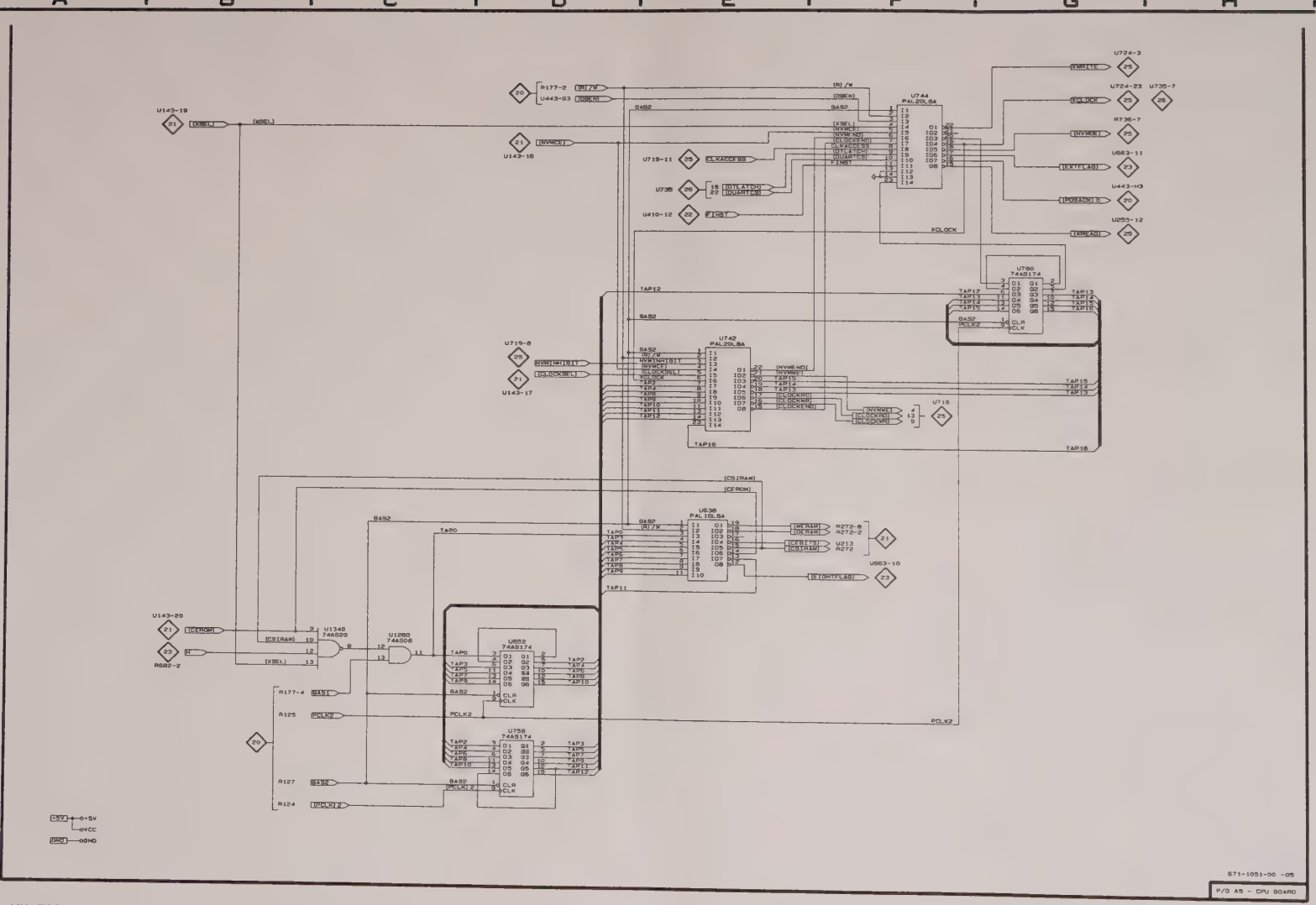


671-1051-00 -05

P/O A5 - CPU BOARD

## CPU BOARD
## Schematic <25> Look-Up Chart

The schematic diagram has an alpha-numeric grid to assist in locating parts within that diagram. The etched circuit boards follow a numbering sequence starting with the lowest number at the upper left corner, as pictured in this manual.

**Assembly A5.** *Partial A5 also shown on Schematics 20, 21, 22, 23, 24, 26, and 27.*

| CIRCUIT NUMBER | SCHEM LOCATION | BOARD LOCATION | CIRCUIT NUMBER | SCHEM LOCATION | BOARD LOCATION |
|---|---|---|---|---|---|
| BT706 | F3 | G1 | R910 | E4 | J1 |
| | | | R911 | D3 | H1 |
| C803 | E4 | H1 | | | |
| C804 | E4 | H1 | U255D | D5 | C5 |
| C805 | E4 | I1 | U716B | D2 | H2 |
| C806 | F4 | H1 | U716C | C3 | H2 |
| C807 | F4 | I1 | U716D | C3 | H2 |
| | | | U719A | B2 | H2 |
| C815 | E4 | I1 | | | |
| C816 | F4 | H1 | U719B | C2 | H2 |
| C824 | C2 | H2 | U719C | C2 | H2 |
| C910 | E4 | J1 | U719D | D3 | H2 |
| C911 | E3 | H1 | U724 | E5 | G2 |
| | | | U772 | C1 | H6 |
| CR508 | B2 | F1 | | | |
| CR509 | B2 | F1 | U783A | G3 | H7 |
| CR614 | G3 | F2 | U818 | E3 | I2 |
| | | | U836 | F1 | I3 |
| J906 | H3 | K1 | U965F | G3 | I6 |
| | | | U965E | G3 | I6 |
| R508 | B2 | E2 | | | |
| R612 | G4 | F2 | VR614 | G4 | F2 |
| R613 | G3 | F2 | | | |
| R614 | G3 | F2 | Y810 | E4 | J1 |
| R724 | C2 | H3 | Y811 | E4 | J1 |
| R725 | E2 | H3 | | | |
| R726 | F5 | H3 | | | |
| R736A | E1 | H3 | | | |
| R736B | E1 | H3 | | | |
| R736C | E2 | H3 | | | |
| R736D | E2 | H3 | | | |
| R773 | D1 | H6 | | | |
| R811 | F4 | I1 | | | |
| R823 | G2 | I2 | | | |
| R836A | E2 | H3 | | | |
| R836B | E2 | H3 | | | |
| R836C | E1 | H3 | | | |
| R836D | E1 | H3 | | | |
| R871 | G3 | I4 | | | |
| R905 | E4 | H1 | | | |

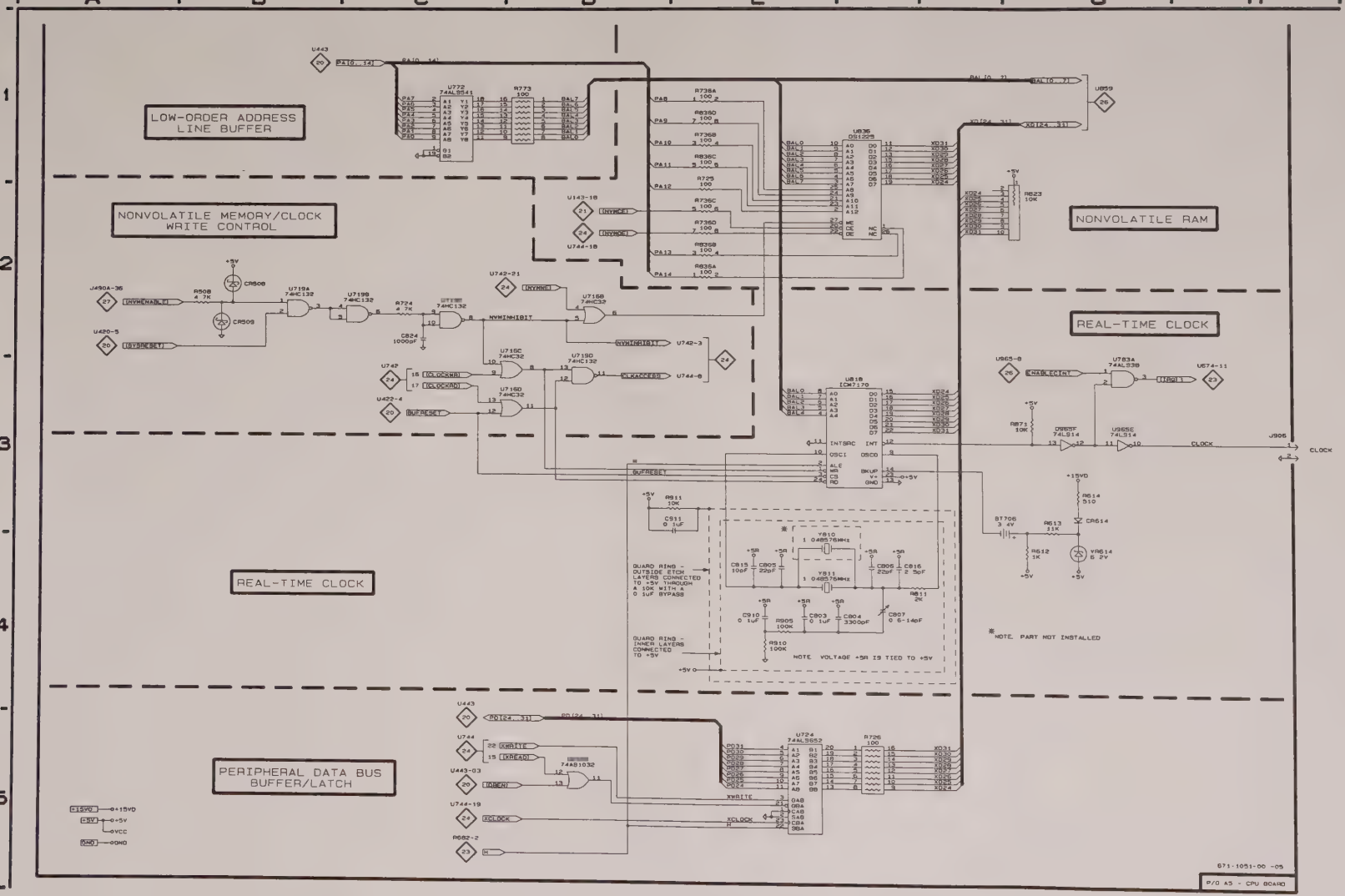
LOW-ORDER ADDRESS LINE BUFFER
NONVOLATILE MEMORY/CLOCK WRITE CONTROL
NONVOLATILE RAM
REAL-TIME CLOCK
REAL-TIME CLOCK
PERIPHERAL DATA BUS BUFFER/LATCH
U443
PA[0..14]
U772 74ALS541
R773 100
U836 DS1225
U859
BAL[0..7]
XD[24..31]
R823 10K
U818 [CM7170
U783A 74ALS38
U674-11
U965-8
U965E 74LS14
U965F 74LS14
J905
CLOCK
U719A 74HC132
U719B 74HC132
U719C 74HC32
U719D 74HC132
U716B 74HC32
U716D 74HC32
R508 4.7K
R724 4.7K
C824 1000pF
CR508
CR509
NVWINHIBIT
NVWINHIB1A
NVWINHIB1B
U742-3
U744-8
U744-18
U143-18
U742-21
U420-5
U422-4
U742
R911 10K
C911 0.1uF
Y810 1.048576MHz
Y811 1.048576MHz
C805 22pF
C806 22pF
C815 10pF
C816 5pF
C807 0-14pF
C803 0.1uF
C804 33000pF
C910 0.1uF
R805 100K
R910 100K
R811 2K
GUARD RING - OUTSIDE ETCH CUTOUT CONNECTED TO +5V THROUGH A 10K WITH 0.1uF BYPASS
GUARD RING - INNER LAYERS CONNECTED TO +5V
NOTE VOLTAGE +5R IS TIED TO +5V
BT706 3.4V
R614 510
R613 2K
R612 1K
CR614
VR614 6.2V
+15VD
NOTE PART NOT INSTALLED
U724 74ALS652
R726 100
XWRITE
XCLOCK
U744 74AB1032
U443-03
U744-19
R682-2
+15VD
+5V
+5VCC
GND
671-1051-00 -05
P/O A5 - CPU BOARD

## CPU BOARD
## Schematic <26> Look-Up Chart

The schematic diagram has an alpha-numeric grid to assist in locating parts within that diagram. The etched circuit boards follow a numbering sequence starting with the lowest number at the upper left corner, as pictured in this manual.

**Assembly A5.** *Partial A5 also shown on Schematics 20, 21, 22, 23, 24, 25, and 27.*

| CIRCUIT NUMBER | SCHEM LOCATION | BOARD LOCATION | CIRCUIT NUMBER | SCHEM LOCATION | BOARD LOCATION |
|---|---|---|---|---|---|
| C855 | A1 | I5 | K946A | G2 | J4 |
| C858 | A2 | I5 | K946B | G1 | J4 |
| C920 | G4 | J2 | | | |
| C921 | F3 | J2 | L920 | E2 | J4 |
| C922 | F4 | J3 | L921 | F3 | J2 |
| | | | L923 | E3 | J4 |
| C923 | F3 | J3 | L924 | G4 | J2 |
| C924 | F3 | J3 | L963 | F5 | J6 |
| C925 | F3 | J3 | | | |
| C927 | F2 | J4 | L965 | E4 | J6 |
| C942 | G2 | J4 | L966 | E4 | J7 |
| C943 | G2 | J4 | Q764 | F2 | H6 |
| C961 | G5 | J5 | | | |
| C962 | F5 | J5 | R733 | C2 | H3 |
| C963 | F5 | J5 | R752 | B2 | H5 |
| C964 | F5 | J6 | R759 | G1 | H5 |
| | | | R760A | B1 | H4 |
| C965 | F4 | J6 | R760C | B1 | H4 |
| C966 | F4 | J7 | | | |
| C967 | F4 | J6 | R760D | D2 | H4 |
| | | | R760E | F1 | H4 |
| CR759 | G1 | H5 | R760F | F1 | H4 |
| | | | R760G | B2 | H4 |
| FL920 | F3 | J2 | R927 | G3 | J3 |
| FL921 | G4 | J2 | R960 | G5 | J5 |
| FL922 | E3 | J2 | | | |
| FL923 | F3 | J3 | U735 | C2 | H3 |
| FL924 | E3 | J3 | U783B | D2 | H7 |
| | | | U783C | F2 | H7 |
| FL925 | F3 | J4 | U783D | F2 | H7 |
| FL927 | E2 | J4 | U859 | C1 | I5 |
| FL928 | G2 | J4 | | | |
| FL929 | G2 | J4 | U874 | D4 | I6 |
| FL961 | G5 | J5 | U933 | D3 | I3 |
| | | | U965A | B3 | I6 |
| FL962 | E5 | J5 | U965B | E2 | I6 |
| FL963 | F5 | J5 | U965C | D2 | I6 |
| FL964 | F4 | J6 | U965D | D1 | I6 |
| FL965 | E4 | J6 | | | |
| FL966 | E4 | J7 | W941 | G3 | J4 |
| | | | W974 | G4 | J7 |
| FL967 | F4 | J7 | | | |
| | | | Y856 | B1 | I5 |
| J307 | A1 | C1 | | | |
| J308 | B1 | C1 | | | |
| J927 | H3 | J3 | | | |
| J944 | H2 | J4 | | | |
| J960 | H4 | J5 | | | |

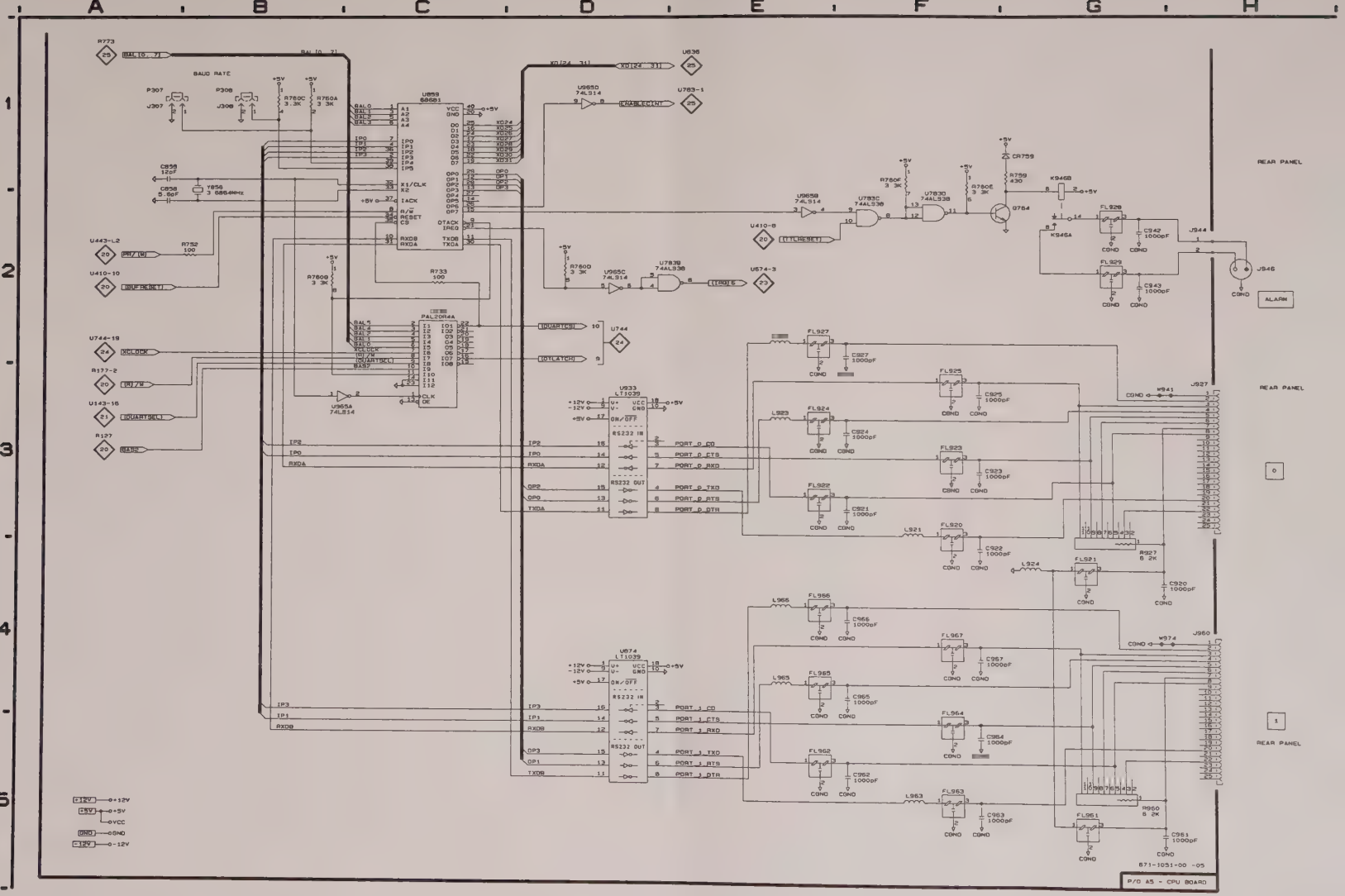
A B C D E F G H
1 2 3 4 5
BAUD RATE
P307
P308
J307
J308
R760C 3.3K
R760A 3 3K
U859 68B01
BAL0
BAL1
BAL2
BAL3
IP0
IP1
IP2
IP3
C858 12pF
C838 5.6pF
Y856 3.6864MHz
X1/CLK
X2
IACK
A/B
RESET
CS
OP0
OP1
OP2
OP3
OP4
OP5
OP6
OP7
OTACK
INEG
RXDB
RXDA
TXDB
TXDA
R773
BAL[0..7]
U836
XD[24..31]
U965D 74LS14
U783-1
R760F 3 3K
R760D 3 3K
R760B 3 3K
U965C 74LS14
U965B 74LS14
U783C 74LS38
U783D 74LS38
R759 430
R760E 3 3K
Q764
CR759
K946B
K946A
FL928
FL929
C942 1000pF
C943 1000pF
J944
J946
ALARM
REAR PANEL
U443-L2
R/W(W)
R752 100
U410-10
BUFRCNT
U410-9
RESET
U674-3
IRQ6
R733 100
PAL20R4A
U744
DUARTIRQ
DOTLATCH
U744-19
XCLOCK
R177-2
R/W
U143-16
DUARTSEL
R127
WAIT
U965A 74LS14
U933 LT1039
U874 LT1039
+12V
-12V
+5V
ON/OFF
RS232 IN
RS232 OUT
IP2
IP0
RXDA
OP2
OP0
TXDA
IP3
IP1
RXDB
OP3
OP1
TXDB
PORT_0_CD
PORT_0_CTS
PORT_0_RXD
PORT_0_TXD
PORT_0_RTS
PORT_0_DTR
PORT_1_CD
PORT_1_CTS
PORT_1_RXD
PORT_1_TXD
PORT_1_RTS
PORT_1_DTR
FL927
FL925
FL924
FL923
FL922
FL920
FL921
FL966
FL967
FL965
FL964
FL962
FL963
FL961
C927 1000pF
C925 1000pF
C924 1000pF
C923 1000pF
C921 1000pF
C922 1000pF
C920 1000pF
C966 1000pF
C967 1000pF
C965 1000pF
C964 1000pF
C962 1000pF
C963 1000pF
C961 1000pF
C951 1000pF
L923
L921
L924
L965
L963
J927
J960
W941
W974
R927 8 2K
R960 8 2K
COND
REAR PANEL
0
1
+12V
+5V
VCC
GND
-12V
671-1051-00 -05
P/O A5 - CPU BOARD

## CPU BOARD
## Schematic <27> Look-Up Chart

The schematic diagram has an alpha-numeric grid to assist in locating parts within that diagram. The etched circuit boards follow a numbering sequence starting with the lowest number at the upper left corner, as pictured in this manual.

**Assembly A5.** *Partial A5 also shown on Schematics 20, 21, 22, 23, 24, 25, and 26.*

| CIRCUIT NUMBER | SCHEM LOCATION | BOARD LOCATION | CIRCUIT NUMBER | SCHEM LOCATION | BOARD LOCATION |
|---|---|---|---|---|---|
| C109 | E4 | B2 | C735 | G5 | H3 |
| C115 | E4 | D2 | C743 | G5 | H4 |
| C122 | E4 | A3 | C751 | E5 | G5 |
| C128 | F4 | C2 | C753 | E5 | H5 |
| C134 | F4 | A3 | C766 | E5 | G6 |
| C140 | F4 | A4 | C767 | F5 | H6 |
| C152 | G4 | A5 | C826 | F5 | H2 |
| C214 | G4 | A1 | C846 | F5 | I4 |
| C221 | G4 | B2 | C874 | G5 | I6 |
| C222 | G4 | B3 | C879 | B4 | I7 |
| C233 | E4 | B3 | C883 | C4 | J7 |
| C234 | E4 | B3 | C886 | A4 | I7 |
| C249 | E4 | B5 | C887 | B4 | I8 |
| C252 | F4 | B5 | C926 | G5 | I2 |
| C260 | F4 | B6 | C960 | G5 | H7 |
| C277 | D4 | A8 | C979 | B5 | I7 |
| C310 | F4 | E1 | C983 | C5 | J8 |
| C317 | G4 | D2 | C986 | A5 | I7 |
| C333 | G4 | C3 | C987 | B5 | I8 |
| C349 | G4 | D3 | CR881 | B4 | I8 |
| C364 | G4 | C6 | CR981 | B5 | I8 |
| C404 | E4 | D2 | F283 | H3 | B7 |
| C429 | D4 | D3 | J490A | D2 | E8 |
| C433 | C4 | D4 | J490B | F2 | E8 |
| C443 | E4 | E3 | J490C | H2 | E8 |
| C456 | D4 | E4 | R281 | D5 | J7 |
| C458 | D4 | E5 | R785 | C1 | G7 |
| C465 | E4 | D6 | TP106 | C5 | B1 |
| C472 | D4 | E7 | TP184 | D5 | B7 |
| C476 | D4 | E7 | TP457 | D5 | D5 |
| C543 | F4 | D5 | TP906 | D5 | K1 |
| C565 | F4 | E6 | TP981 | D5 | J8 |
| C614 | F4 | E1 | U882 | B4 | I7 |
| C618 | G4 | F2 | U982 | B5 | I7 |
| C631 | G4 | G3 | | | |
| C633 | G4 | F3 | | | |
| C646 | G4 | F4 | | | |
| C648 | E5 | F5 | | | |
| C658 | E5 | F5 | | | |
| C664 | E5 | F6 | | | |
| C668 | F5 | F6 | | | |
| C711 | F5 | H1 | | | |
| C713 | F5 | H1 | | | |
| C715 | G5 | G2 | | | |
| C733 | G5 | G3 | | | |

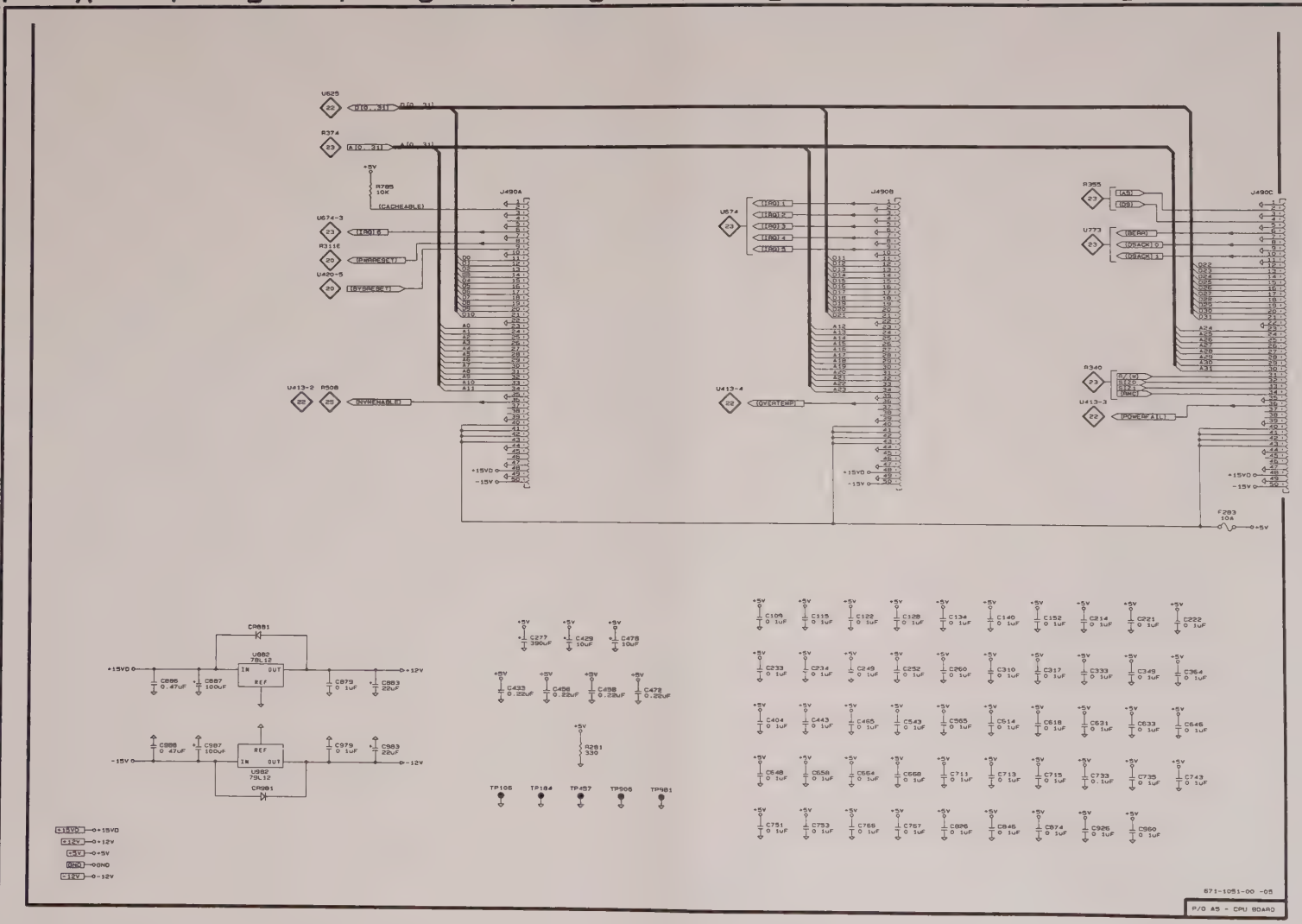
A
B
C
D
E
F
G
H
1
2
3
4
5
U625
R374
R705
10K
(CACHEABLE)
U674-3
R311E
U420-5
(DMAREQ*)
(SYSRESET)
J490A
U413-2
R508
(NVMENABLE)
U674
U413-4
(QVCATEMP)
J490B
R355
U773
(BGRA)
(DSACK1 0)
(DSACK1 1)
J490C
R340
U413-3
(POWERFAIL)
J150
61
MAIN INTERFACE LEFT BOARD
F283
10A
+5V
+15VD
-15V
CR881
U882
78L12
U883
79L12
C886
0 47uF
C887
100uF
C879
0 1uF
C883
22uF
C878
0 1uF
C879
0 1uF
C883
22uF
C886
0 47uF
C887
100uF
C277
390uF
C429
10uF
C478
10uF
C433
0 22uF
C458
0 22uF
C498
0 22uF
C472
0 22uF
A281
330
TP105
TP184
TP457
TP906
TP981
C109
C115
C122
C128
C134
C140
C152
C214
C221
C222
C233
C234
C249
C252
C260
C310
C317
C333
C349
C364
C404
C443
C465
C543
C565
C614
C618
C631
C633
C646
C648
C658
C664
C668
C713
C713
C715
C733
C735
C743
C751
C753
C765
C767
C826
C845
C874
C926
C960
+15VD
+12V
+5V
GND
-12V
671-1051-00 -05
P/O A5 - CPU BOARD

MOTHERBOARD INTERFACE
& DECOUPLING CAPS <27>

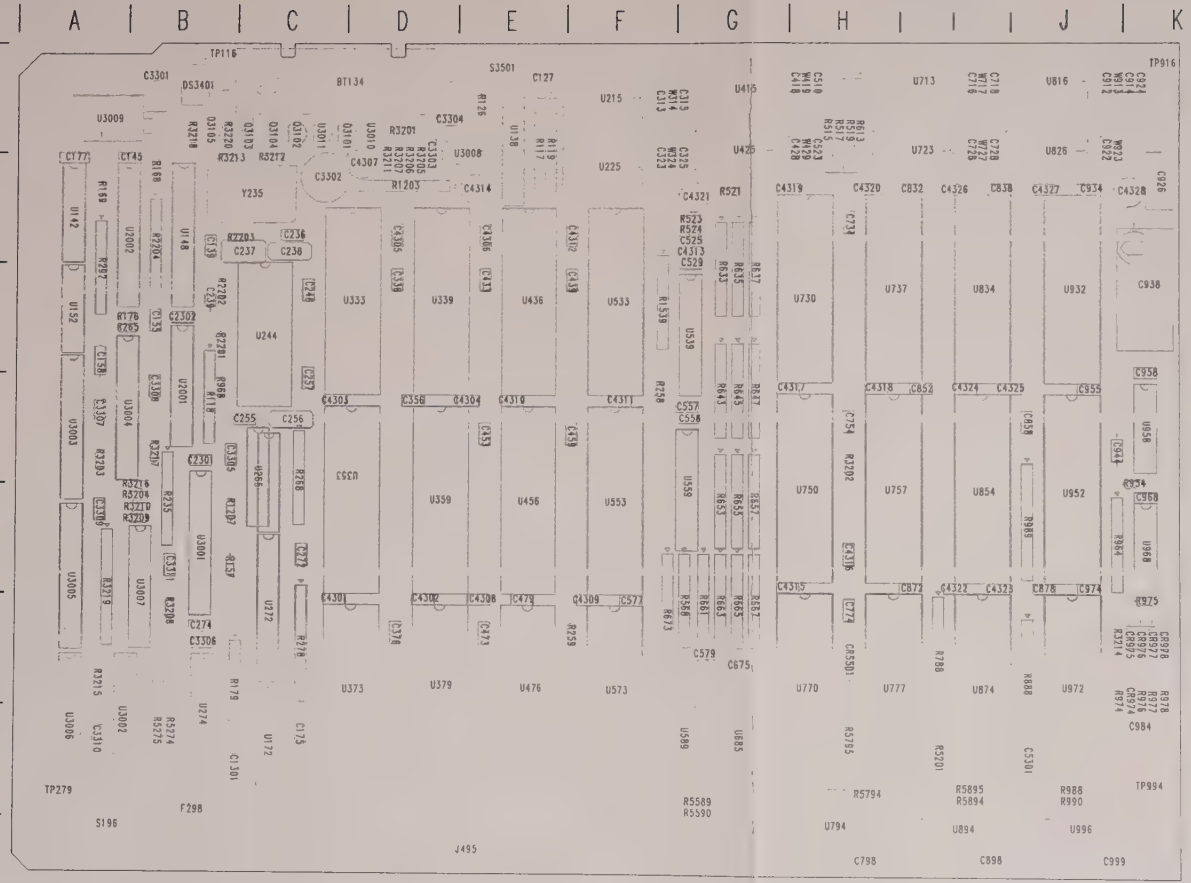


A6 FLASH EPROM/NVRAM BOARD

Static Sensitive Devices
*See the section in this manual on handling precautions for static sensitive components.*

## FLASH EPROM/NVRAM BOARD
## Schematic <28> Look-Up Chart

The schematic diagram has an alpha-numeric grid to assist in locating parts within that diagram. The etched circuit boards follow a numbering sequence starting with the lowest number at the upper left corner, as pictured in this manual.

**Assembly A6** Partial Assembly A6 also shown on Schematics 29, 29A, 30 and 31.

| CIRCUIT NUMBER | SCHEM LOCATION | BOARD LOCATION |
|---|---|---|
| BT134 | F5 | C1 |
| C127 | B5 | E1 |
| C139 | B5 | B2 |
| C145 | B5 | A2 |
| C155 | B5 | B3 |
| C175 | C5 | C7 |
| C236 | C5 | C2 |
| C246 | C5 | C3 |
| C257 | E5 | C3 |
| C272 | E5 | C5 |
| C274 | E5 | B6 |
| C336 | F5 | D3 |
| C356 | F5 | D4 |
| C376 | F5 | D6 |
| C433 | F5 | E3 |
| C439 | F5 | F3 |
| C453 | G5 | E4 |
| C459 | G5 | F4 |
| C473 | G5 | E6 |
| C479 | G5 | E6 |
| C525 | B5 | G2 |
| C529 | B5 | G3 |
| C557 | B5 | G4 |
| C558 | B5 | G4 |
| C577 | C5 | F6 |
| C579 | C5 | G6 |
| C675 | C5 | G6 |
| C734 | C5 | H2 |
| C754 | D5 | H4 |
| C774 | D5 | H6 |
| C798 | D5 | H8 |
| C832 | D5 | I2 |
| C838 | E5 | I2 |
| C852 | E5 | I4 |
| C858 | E5 | J4 |
| C872 | E5 | I5 |
| C878 | F5 | J5 |
| C898 | F5 | I8 |
| C934 | F5 | J2 |
| C938 | B2 | K3 |
| C944 | G3 | J4 |
| C955 | F5 | J4 |
| C958 | F5 | K4 |
| C968 | G5 | K5 |
| C974 | G5 | J5 |
| C999 | G5 | J8 |
| C1301 | B2 | B7 |
| CR975 | C3 | K6 |
| CR976 | C3 | K6 |
| CR977 | C3 | K6 |
| CR978 | C4 | K6 |
| F298 | B2 | B7 |
| J495A | A1 | E8 |
| J495B | A2 | E8 |
| J495C | A4 | E8 |
| R117 | G5 | E1 |
| R119 | G4 | E1 |
| R126 | F5 | E1 |
| R179A | D4 | B6 |
| R179B | D4 | B6 |
| R179C | D4 | B6 |
| R179D | D4 | B6 |
| R179E | D4 | B6 |
| R179F | D4 | B6 |
| R179G | D4 | B6 |
| R258 | G3 | F4 |
| R259 | G2 | F6 |
| R268 | G3 | C4 |
| R954 | F3 | K4 |
| R964A | H3 | J5 |
| R964B | G3 | J5 |
| R964C | D3 | J5 |
| R964D | D4 | J5 |
| R968 | G3 | B4 |
| R975 | H5 | K6 |
| R976 | C3 | K6 |
| R977 | C4 | K6 |
| R978 | B1 | K6 |
| R1203 | F4 | D2 |
| R1207 | F3 | B5 |
| R1539 | E1 | F3 |
| S196 | D5 | A8 |
| TP116 | B5 | B1 |
| TP279 | B5 | A7 |
| TP916 | B5 | K1 |
| TP994 | B5 | K7 |
| U138 | F4 | E1 |
| U172 | D4 | C7 |
| U265 | F3 | C4 |
| U272 | F4 | C6 |
| U539 | D1 | G3 |
| U559 | D2 | G4 |
| U685 | D2 | G7 |
| U958A | F3 | K4 |
| U958B | F3 | K4 |
| U958C | G3 | K4 |
| U968A | D3 | K5 |
| U968B | D4 | K5 |
| U968C | G3 | K5 |
| U968D | B1 | K5 |

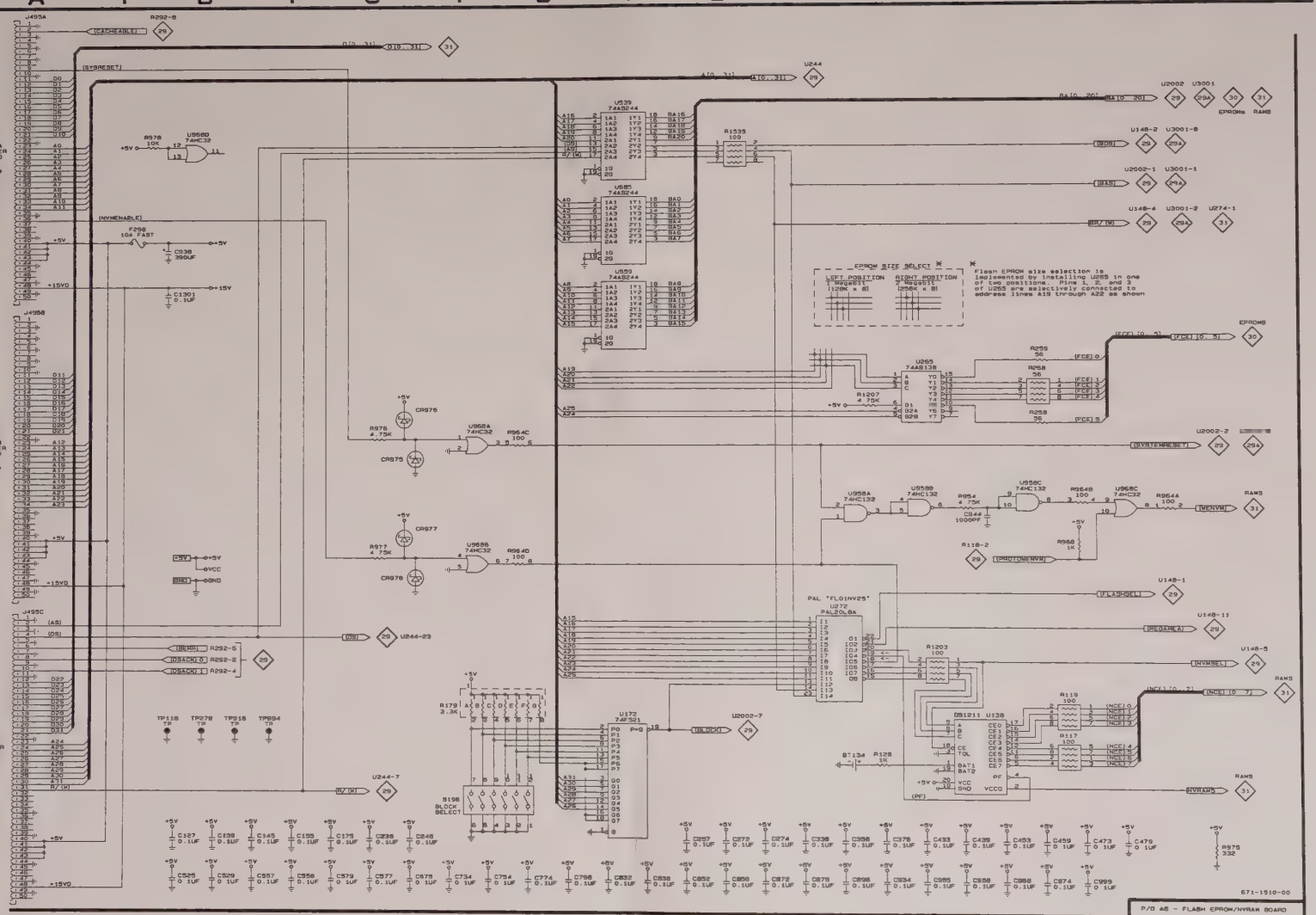
A
B
C
D
E
F
G
H
1
2
3
4
5
J495A
J495B
J495C
J140A MOTHER BOARD
J140B MOTHER BOARD
J140C MOTHER BOARD
R292-8
(CACHEABLE)
D[0..31]
(SYSRESET)
(NVMENABLE)
U9588 74HC32
R978 10K
F298 10A FAST
C938 330UF
C1301 0.1UF
+5V
+15V
+15VD
U9588 74HC32
R975 4.75K
CR975
R964C 100
U9586 74HC32
R977 4.75K
CR977
R964D 100
U9587 74AS244
U9589 74AS244
U9590 74AS244
U244
A[0..31]
U2002 U3001
BA[0..20]
EPROMs
RAMS
U148-2 U3001-0
(BDS)
U2002-1 U3001-1
(BAS)
U148-4 U3001-1 U274-1
(R/W)
EPROM SIZE SELECT
LEFT POSITION 1 Megabit (128K x 8)
RIGHT POSITION 2 Megabit (256K x 8)
Flash EPROM size selection is implemented by installing U265 in one of two positions. Pins 1, 2, and 3 of U265 are selectively connected to address lines A19 through A22 as shown
U265 74AS138
R259 56
R260 56
R258 56
(FCE)0
(FCE)1
(FCE)2
(FCE)3
(FCE)4
(FCE)5
(FCE)[0..5]
EPROMS
R1207 4.75K
U2002-2
(SYSRESETNVRAM)
U958A 74HC132
U958B 74HC132
R954 4.75K
C944 1000PF
U958C 74HC132
U958C 74HC32
R964B 100
R964A 100
(WENVM)
R118-2
(PROTOWENVM)
R968 1K
U148-1
(FLASHSEL)
PAL "FL01NV2S"
U272 PAL20L8A
U148-11
(OEROMA)
U148-5
(NVRSEL)
R1203 100
R119 100
R117 100
DS1211 U138
(NCE)[0..7]
BT134
R128 1K
(PF)
(NVRAMS)
U172 74F521
(BLOCK)
U2002-7
R179 3.3K
A B C D E F G
S198 BLOCK SELECT
TP118
TP278
TP916
TP894
U244-23
U244-7
C127 0.1UF
C139 0.1UF
C145 0.1UF
C155 0.1UF
C175 0.1UF
C236 0.1UF
C248 0.1UF
C525 0.1UF
C529 0.1UF
C557 0.1UF
C558 0.1UF
C579 0.1UF
C577 0.1UF
C675 0.1UF
C734 0.1UF
C754 0.1UF
C774 0.1UF
C798 0.1UF
C832 0.1UF
C838 0.1UF
C852 0.1UF
C856 0.1UF
C872 0.1UF
C878 0.1UF
C898 0.1UF
C934 0.1UF
C985 0.1UF
C858 0.1UF
C968 0.1UF
C874 0.1UF
C999 0.1UF
R378 332
671-1910-00
P/O A6 - FLASH EPROM/NVRAM BOARD
VM700A
ADDRESS BUFFERS & DECODING
28

## FLASH EPROM/NVRAM BOARD
## Schematic <29> Look-Up Chart

The schematic diagram has an alpha-numeric grid to assist in locating parts within that diagram. The etched circuit boards follow a numbering sequence starting with the lowest number at the upper left corner, as pictured in this manual.

**Assembly A6.** Partial Assembly A6 also shown on schematics 28, 29A, 30 and 31.

| CIRCUIT NUMBER | SCHEM LOCATION | BOARD LOCATION |
|---|---|---|
| C158 | G5 | A3 |
| C177 | G4 | A2 |
| C237 | C3 | B2 |
| C238 | B3 | C2 |
| C239 | B3 | B3 |
| C255 | B3 | B4 |
| C256 | B3 | C4 |
| C2301 | A5 | B4 |
| C2302 | A5 | B3 |
| R118 | F1 | B4 |
| R157 | F2 | B5 |
| R168 | G4 | B2 |
| R169 | G4 | A2 |
| R176 | G5 | A3 |
| R235 | F1 | B5 |
| R265 | G4 | A3 |
| R292 | G2 | A2 |
| R2201 | C3 | B3 |
| R2202 | A3 | B3 |
| R2203 | B3 | B2 |
| R2204 | F3 | B2 |
| U142 | G2 | A2 |
| U148 | E2 | B2 |
| U152A | D3 | A3 |
| U152B | D1 | A3 |
| U244 | B3 | C3 |
| U2001 | E1 | B4 |
| U2002 | F4 | A2 |
| Y235 | A3 | C2 |

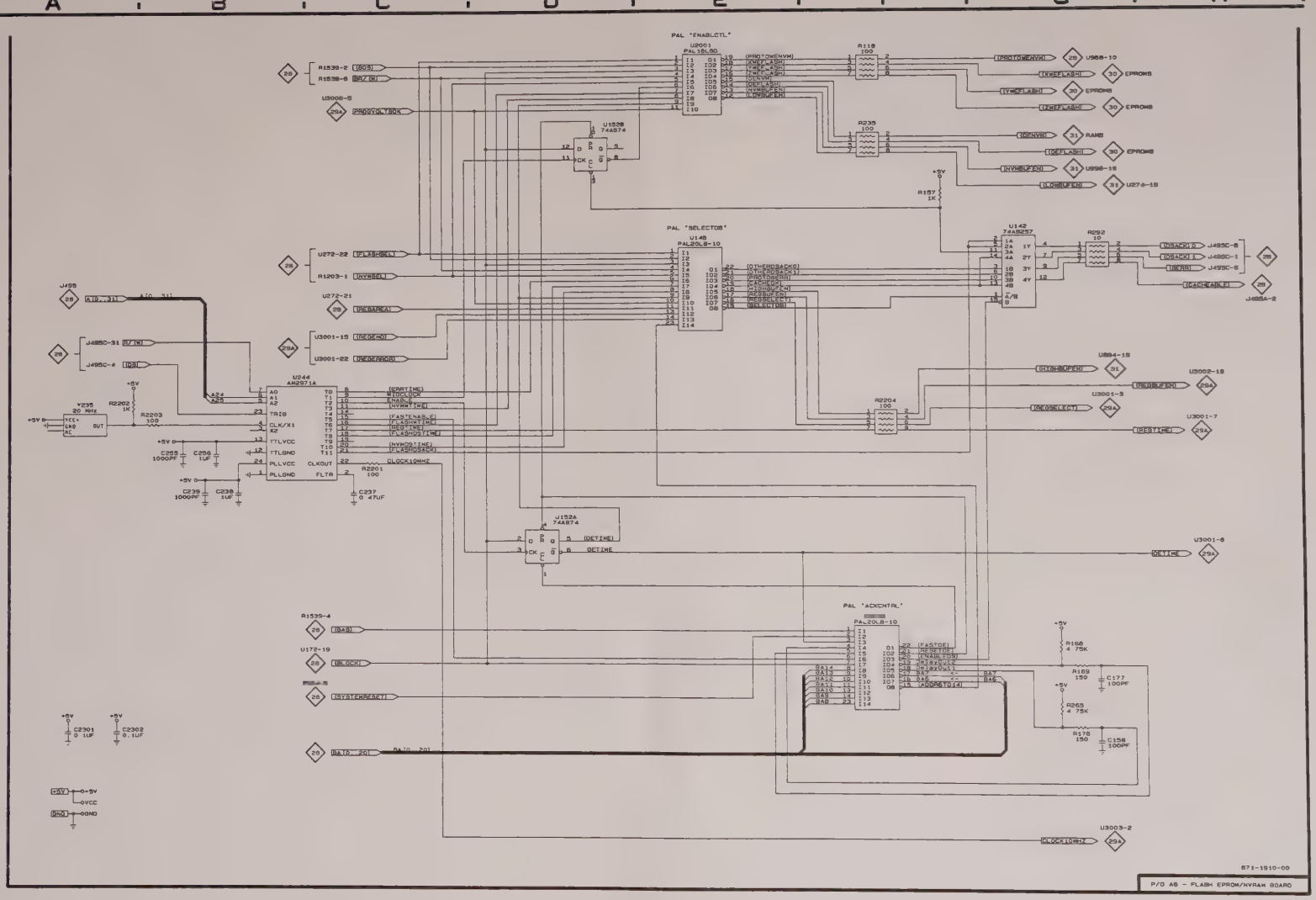
PAL "ENABLCTL"
U2001
PAL16L8D
R1539-2 (BGS)
R1539-6 (R/W)
U3008-5
PROTOVLTDIR
U152B
74AS74
R118
100
(PROTOWENVM)
(NWEFLASH)
(EWEFLASH)
(OEVM)
(OEFLASH)
(NVMBUFEN)
(LVMBUFEN)
U968-10
EPROM6
EPROM6
EPROM6
RAM8
EPROM6
U998-19
U276-19
R235
100
+5V
R157
1K
PAL "SELECTOR"
U149
PAL20L8-10
U272-22 (FLASHSEL)
R1203-1 (NVMSEL)
U272-21 (DENMREA)
U3001-15 (REQZERO)
U3001-22 (REQZERO)
(OTHERBACK0)
(OTHERBACK1)
(PROTOREQR)
(CACHEDO)
(NIOWDZ*4)
(REQBUFEN)
(REQSELECT)
(DELAYTOG)
U142
74AS257
R292
10
(NBACK1)
(NBACK3)
(SCAR)
(CACHEABLE)
J495C-8
J495C-1
J495C-5
J495A-2
J495
A(0..31)
J495C-31 R/W
J495C-4 IOS
U244
AM2971A
A24
A25
TRIB
CLK/X1
X2
TTLVCC
TTLGND
PLLVCC
PLLGND
CLKOUT
FLTR
(ERASTIME)
NTIDCLOCK
ENABLE
(NVMWTIME)
(FASTE*4SEC)
(FLASHWTIME)
(REQ.TIME)
(FLASHOSTIME)
(NVMODTIME)
(FLASHOSECK)
CLOCK10MHZ
Y235
20 MHz
R2202
1K
R2203
100
R2201
100
C259
1000PF
C256
1UF
C239
1000PF
C238
1UF
C237
0.47UF
U894-19
(HVG-BUFEN)
U3002-19
(MDRBUFEN)
U3003-3
(CLOCKSELECT)
U3001-7
(RESTIME)
R2204
100
U152A
74AS74
(DETIME)
DETIME
U3001-6
DETIME
PAL "ACKCNTRL"
PAL20L8-10
(FASTOE)
(NENABLE)
(ENABLEOE)
(DELAYOE)
(ADDRSTO[4])
R168
4.75K
R169
150
C177
100PF
R265
4.75K
R178
150
C158
100PF
R1539-4 (BAS)
U172-19 (CLOCK)
(SYSTERMREAD)
(BA10..20) BA10..20
C2301
0.1UF
C2302
0.1UF
+5V
0VCC
GND
0GND
U3003-2
CLOCK10MHZ
671-1910-00
P/O A5 - FLASH EPROM/NVRAM BOARD

## FLASH EPROM/NVRAM BOARD
## Schematic <29A> Look-Up Chart

The schematic diagram has an alpha-numeric grid to assist in locating parts within that diagram. The etched circuit boards follow a numbering sequence starting with the lowest number at the upper left corner, as pictured in this manual.

**Assembly A6.** Partial Assembly A6 also shown on schematics 28, 29, 30 and 31

| CIRCUIT NUMBER | SCHEM LOCATION | BOARD LOCATION |
|---|---|---|
| C3301 | F4 | B1 |
| C3302 | G4 | C2 |
| C3303 | F4 | D1 |
| C3304 | F4 | D1 |
| C3305 | B5 | B4 |
| C3306 | A5 | B6 |
| C3307 | B5 | A4 |
| C3308 | B5 | B4 |
| C3309 | B5 | A5 |
| C3310 | B5 | A7 |
| C3311 | A5 | B5 |
| DS3401 | F3 | B1 |
| Q3101 | F4 | C1 |
| Q3102 | F5 | C1 |
| Q3103 | F4 | C1 |
| Q3104 | G5 | C1 |
| Q3105 | F2 | B1 |
| R3201 | C2 | D1 |
| R3202 | C2 | H4 |
| R3203 | D2 | A4 |
| R3204 | D3 | A5 |
| R3205 | F4 | D1 |
| R3206 | F4 | D1 |
| R3207 | F4 | D1 |
| R3208 | E4 | B6 |
| R3209 | E5 | A5 |
| R3210 | E5 | A5 |
| R3211 | F4 | D1 |
| R3212 | F4 | C2 |
| R3213 | F5 | B2 |
| R3214 | G4 | J6 |
| R3215 | G4 | A6 |
| R3216 | E2 | A5 |
| R3217 | E2 | B4 |
| R3218 | F2 | B1 |
| R3219 | H2 | A5 |
| R3220 | G4 | B1 |
| S3501 | C2 | E1 |

| CIRCUIT NUMBER | SCHEM LOCATION | BOARD LOCATION |
|---|---|---|
| U958D | C2 | K4 |
| U3001 | C3 | B5 |
| U3002 | C4 | A7 |
| U3003 | D1 | A4 |
| U3004 | E3 | A4 |
| U3005 | G1 | A5 |
| U3006 | H1 | A7 |
| U3007 | H3 | B5 |
| U3008 | G3 | D2 |
| U3009 | G4 | A1 |
| U3010 | E4 | D1 |
| U3011 | E5 | C1 |

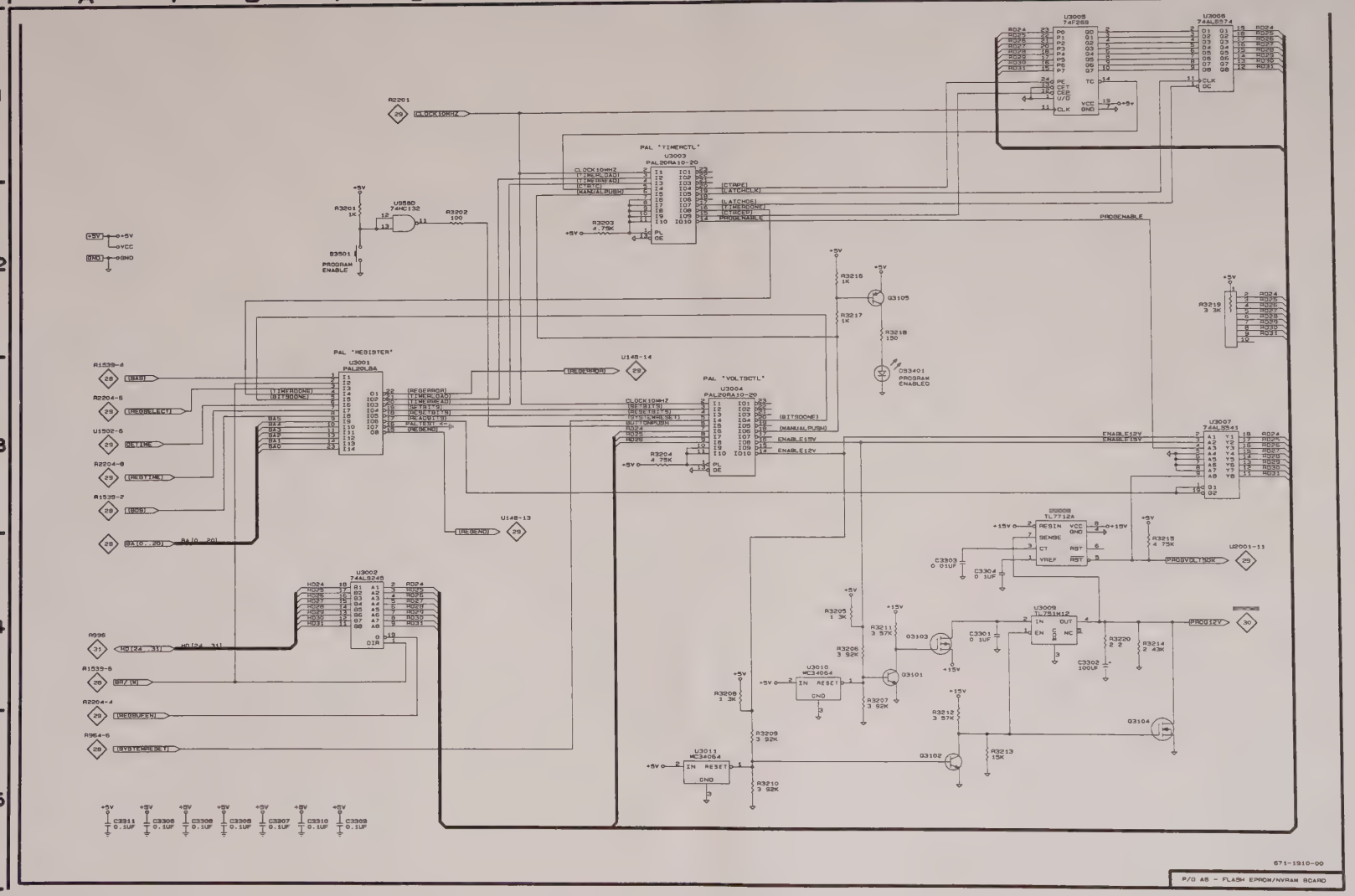
A B C D E F G H
1 2 3 4 5
U3005 74ALS574
U3006 74ALS574
R2201
CLOCK10MHZ
PAL 'TIMERCTL'
U3003 PAL20RA10-20
CLOCK10MHZ
(TIMERLOAD)
(TIMERENABLE)
(SYSRST)
MANUAL PUSH
(CTRPE)
(LATCHCLK)
(LATCHDEI)
(TIMERDONE)
(TIMERENB)
PROGENABLE
R3201 1K
U3008 74HC132
R3202 100
B3501
PROGRAM ENABLE
R3203 4.75K
+5V
GND
+5VCC
+GND
R3216 1K
Q3105
R3217 1K
R3218 150
D3401
PROGRAM ENABLED
R3219 3.3K
PAL 'REGISTER'
U3001 PAL20L8A
(REGERASE)
(TIMERLOAD)
(TIMERENABLE)
(SPSTB)
(REGSTB)
(REGADDR)
(PALTEST)
(REGEND)
U148-14
(REGERASE)
PAL 'VOLTSCTL'
U3004 PAL20RA10-20
CLOCK10MHZ
(RESETB)
(RESETSTB)
(SYSTEMRESET)
(BUTTONPUSH)
(BITDONE)
(MANUAL PUSH)
ENABLE15V
ENABLE12V
R3204 4.75K
U3007 74ALS541
ENABLE12V
ENABLE15V
R1539-4
(BAB)
R2204-5
(REGERASE)
U1502-5
(RESET)
R2204-8
(RESETIME)
R1539-2
(BWB)
BA10..20
BA0..20
U148-13
(REGEND)
U3002 74ALS245
R996
HD(24..31)
R1539-6
(BR/W)
R2204-4
(DCOBUFEN)
R964-5
(BVIDCAPSELT)
TL7712A
R3215 4.75K
C3303 0.01UF
C3304 0.1UF
U2001-11
PROGVOLTSDK
U3009 TL751M12
R3205 1.3K
R3211 3.57K
Q3103
C3301 0.1UF
R3220 2.2
R3214 2.43K
C3302 100UF
PROG12V
U3010 MC34064
R3206 3.92K
Q3101
R3207 3.92K
R3208 1.3K
R3209 3.92K
R3212 3.57K
Q3104
U3011 MC34064
R3213 15K
Q3102
R3210 3.92K
C3311 0.1UF
C3306 0.1UF
C3308 0.1UF
C3305 0.1UF
C3307 0.1UF
C3310 0.1UF
C3309 0.1UF
671-1910-00
P/O A8 - FLASH EPROM/NVRAM BOARD

## FLASH EPROM/NVROM BOARD
## Schematic <30> Look-Up Chart

The schematic diagram has an alpha-numeric grid to assist in locating parts within that diagram. The etched circuit boards follow a numbering sequence starting with the lowest number at the upper left corner, as pictured in this manual.

**Assembly A6.** Partial Assembly A6 also shown on Schematics 28, 29, 29A, and 31.

| CIRCUIT NUMBER | SCHEM LOCATION | BOARD LOCATION |
|---|---|---|
| C4301 | C1 | C6 |
| C4302 | C2 | D6 |
| C4303 | C3 | C4 |
| C4304 | C4 | D4 |
| C4305 | C5 | D2 |
| C4306 | C5 | E2 |
| C4307 | D1 | D2 |
| C4308 | E1 | E6 |
| C4309 | E2 | F6 |
| C4310 | E3 | E4 |
| C4311 | E4 | F4 |
| C4312 | E5 | F2 |
| C4313 | E5 | G2 |
| C4314 | E1 | E2 |
| C4315 | F1 | G5 |
| C4316 | F2 | H5 |
| C4317 | F3 | G4 |
| C4318 | F4 | H4 |
| C4319 | F5 | G2 |
| C4320 | F5 | H2 |
| C4321 | F1 | G2 |
| C4322 | G1 | I5 |
| C4323 | G2 | I5 |
| C4324 | G3 | I4 |
| C4325 | G4 | I4 |
| C4326 | G5 | I2 |
| C4327 | G5 | J2 |
| C4328 | H1 | J2 |
| R568A | B2 | G6 |
| R568B | B2 | G6 |
| R633 | B4 | G2 |
| R635 | B5 | G2 |
| R637 | B4 | G2 |
| R643A | B5 | G4 |
| R643B | B5 | G4 |
| R643C | B3 | G4 |
| R643D | B3 | G4 |
| R645 | B3 | G4 |
| R647 | B5 | G4 |
| R653 | B3 | G5 |
| R655 | B3 | G5 |
| R657 | B2 | G5 |
| R661 | B1 | G6 |
| R663 | B1 | G6 |
| R665 | B2 | G6 |
| R667 | B1 | G6 |
| U333 | C4 | C3 |
| U339 | C5 | D3 |
| U353 | C2 | D4 |
| U359 | C3 | D5 |
| U373 | C1 | C6 |
| U379 | C2 | D6 |
| U436 | D4 | E3 |
| U456 | D2 | E5 |
| U476 | D1 | E6 |
| U533 | D5 | F3 |
| U553 | D3 | F5 |
| U573 | D2 | F6 |
| U730 | F4 | H3 |
| U737 | F5 | H3 |
| U750 | F2 | H5 |
| U757 | F3 | H5 |
| U770 | F1 | H6 |
| U777 | F2 | H6 |
| U834 | G4 | I3 |
| U854 | G2 | I5 |
| U874 | G1 | I6 |
| U932 | G5 | J3 |
| U952 | G3 | J5 |
| U972 | G2 | J6 |

FLASH EPROM PROGRAMMING CONTROL <29A>

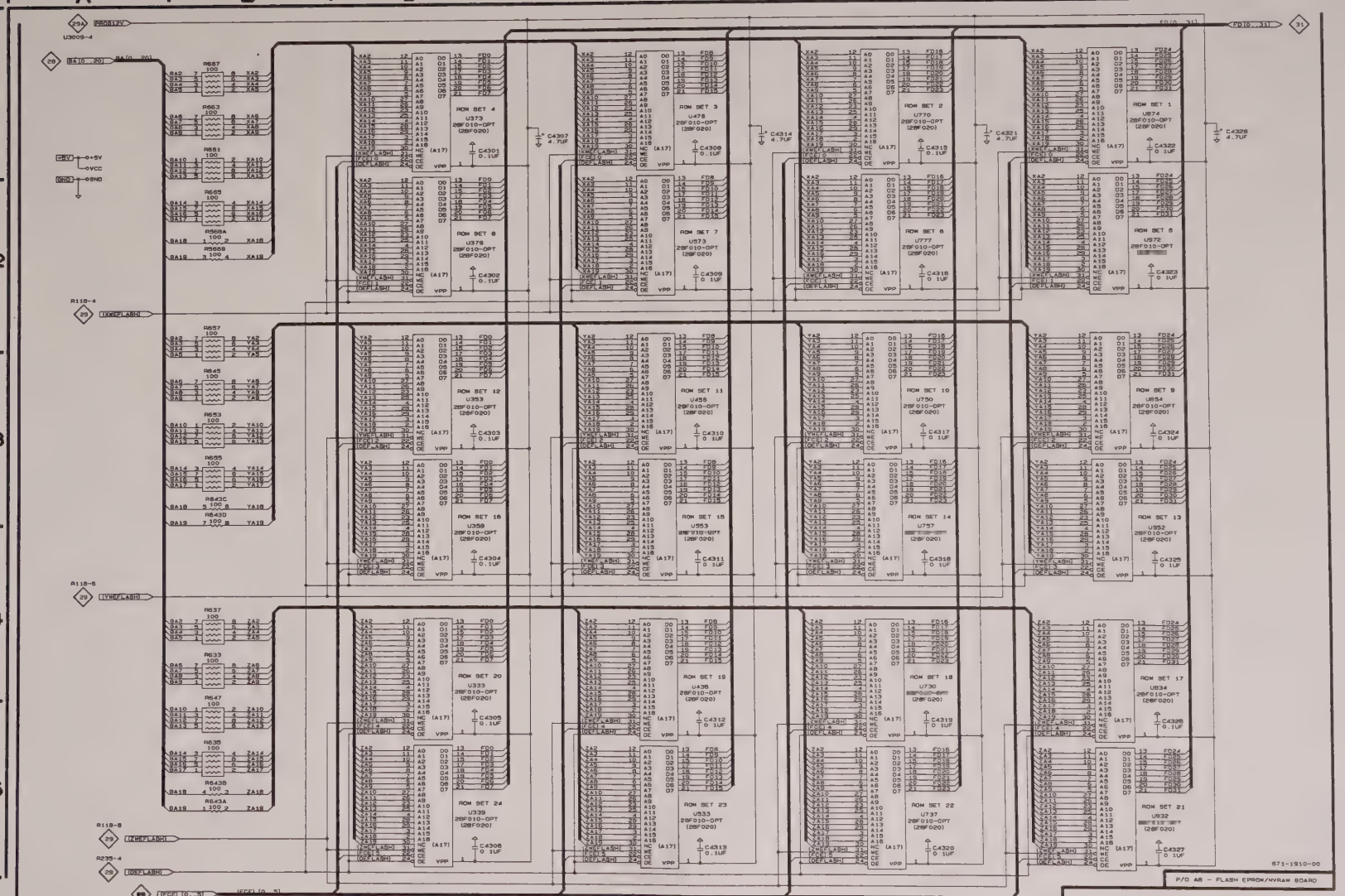
A
B
C
D
E
F
G
H
1
2
3
4
5
U3009-4
+5V
0VCC
GND
0GND
R687
R663
R681
R669
R568A
R568B
R657
R645
R653
R655
R643C
R643D
R637
R633
R647
R635
R643B
R643A
ROM SET 4
U373
28F010-OPT
(28F020)
ROM SET 3
U476
ROM SET 2
U770
ROM SET 1
U874
ROM SET 8
U379
ROM SET 7
U573
ROM SET 6
U777
ROM SET 5
U972
ROM SET 12
U359
ROM SET 11
U456
ROM SET 10
U750
ROM SET 9
U854
ROM SET 16
U358
ROM SET 15
U353
ROM SET 14
U757
ROM SET 13
U952
ROM SET 20
U333
ROM SET 19
U436
ROM SET 18
U730
ROM SET 17
U834
ROM SET 24
U339
ROM SET 23
U533
ROM SET 22
U737
ROM SET 21
U832
(A17)
VPP
671-1910-00
P/O A6 - FLASH EPROM/NVRAM BOARD
FLASH EPROM ARRAY
30
VM700A

## FLASH EPROM/NVRAM BOARD
## Schematic <31> Look-Up Chart

The schematic diagram has an alpha-numeric grid to assist in locating parts within that diagram. The etched circuit boards follow a numbering sequence starting with the lowest number at the upper left corner, as pictured in this manual.

**Assembly A6.** Partial Assembly A6 also shown on Schematics 28, 29, 29A and 30

| CIRCUIT NUMBER | SCHEM LOCATION | BOARD LOCATION |
|---|---|---|
| C313 | C2 | F1 |
| C315 | C2 | G1 |
| C323 | C3 | F1 |
| C325 | C3 | G1 |
| C418 | C4 | H1 |
| C428 | C5 | H1 |
| C510 | C4 | H1 |
| C523 | B5 | H1 |
| C716 | D2 | I1 |
| C718 | D2 | I1 |
| C726 | D3 | I1 |
| C728 | D3 | I1 |
| C912 | D4 | J1 |
| C914 | D4 | K1 |
| C922 | D5 | J1 |
| C924 | D5 | K1 |
| C926 | B1 | K2 |
| C984 | F5 | K7 |
| C5301 | G1 | J7 |
| CR974 | F4 | K6 |
| CR5501 | G1 | H6 |
| R278 | F1 | C6 |
| R515 | B2 | H1 |
| R517 | B2 | H1 |
| R519 | B2 | H1 |
| R521 | B5 | G2 |
| R523 | B3 | G2 |
| R524 | B3 | G2 |
| R613 | B2 | H1 |
| R673 | F2 | F6 |
| R788 | F3 | I6 |
| R888 | F3 | J6 |
| R974 | F5 | J6 |
| R988 | G5 | J7 |
| R989 | F5 | J5 |
| R990 | G5 | J7 |
| R5201 | G1 | I7 |
| R5274 | G1 | B7 |
| R5275 | G2 | B7 |
| R5589 | G2 | G7 |
| R5590 | G2 | G7 |
| R5794 | G3 | H7 |
| R5795 | G3 | H7 |
| R5894 | G4 | I7 |
| R5895 | G4 | I7 |
| U215 | C1 | F1 |
| U225 | C2 | F2 |
| U274 | H1 | B7 |
| U415 | C3 | G1 |
| U425 | C4 | G2 |

| CIRCUIT NUMBER | SCHEM LOCATION | BOARD LOCATION |
|---|---|---|
| U589 | H2 | G7 |
| U713 | E1 | I1 |
| U723 | E2 | I2 |
| U794 | H3 | H8 |
| U816 | E3 | J1 |
| U826 | E4 | J2 |
| U894 | H4 | I8 |
| U996 | G5 | J8 |
| W314 | C2 | F1 |
| W324 | C3 | F1 |
| W419 | C4 | H1 |
| W429 | C5 | H1 |
| W717 | D2 | I1 |
| W727 | D3 | I1 |
| W913 | D4 | J1 |
| W923 | D5 | J1 |

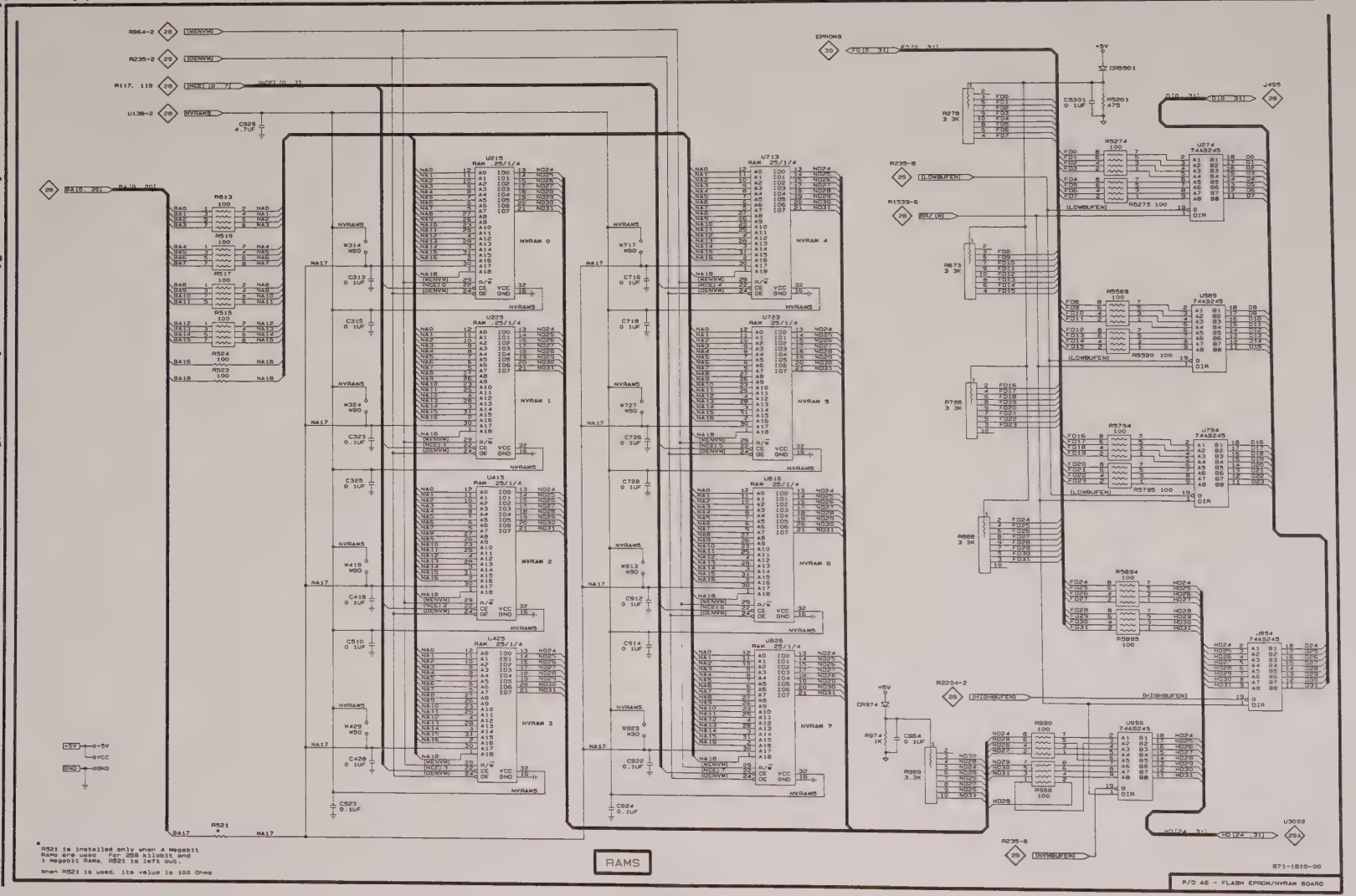
A B C D E F G H
1 2 3 4 5
RAMS
P/O A6 - FLASH EPROM/NVRAM BOARD
671-1810-00
* R521 is installed only when 4 Megabit RAMs are used. For 256 kilobit and 1 Megabit RAMs, R521 is left out.
When R521 is used, its value is 100 Ohms

NVRAM ARRAY & DATA
BUS BUFFERS <31>

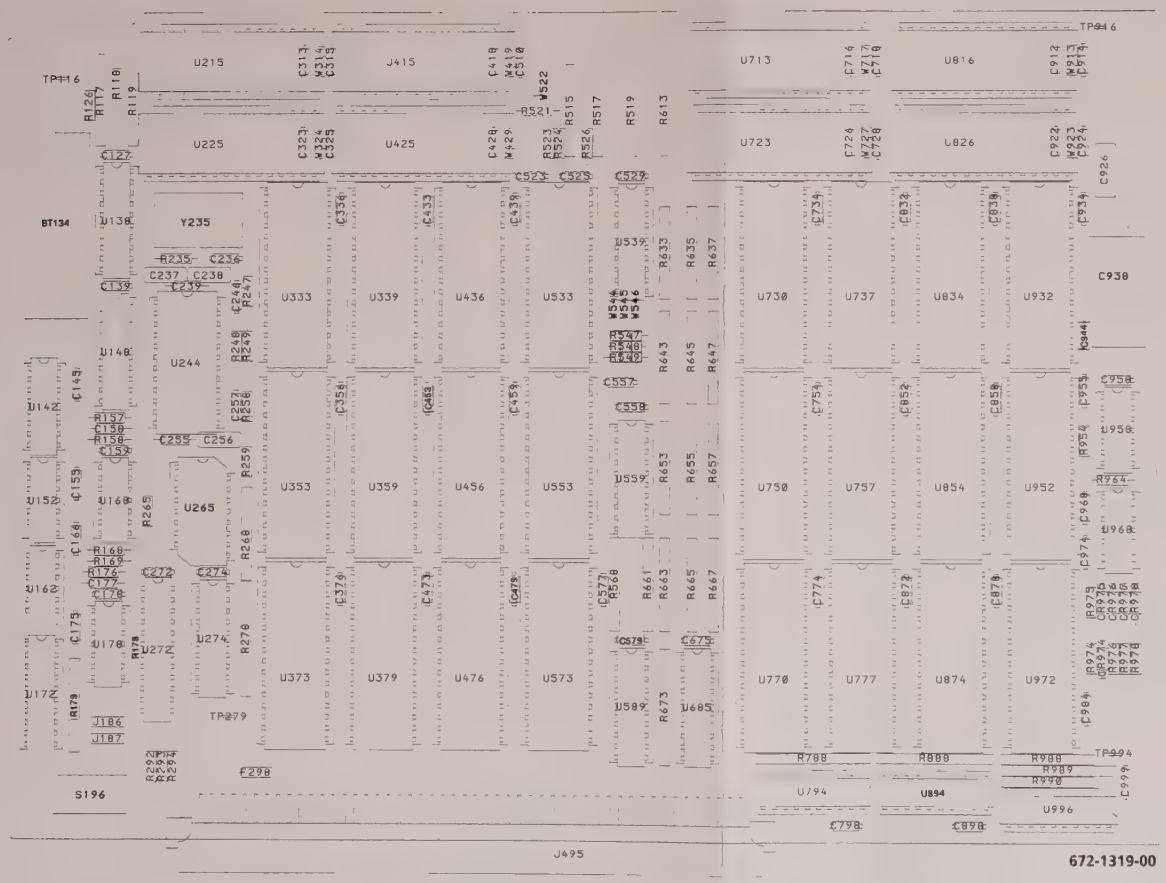


A6 EPROM BOARD

Static Sensitive Devices
*See the section in this manual on handling precautions for static sensitive components.*

## EPROM BOARD
## Schematic <28> Look-Up Chart

The schematic diagram has an alpha-numeric grid to assist in locating parts within that diagram. The etched circuit boards follow a numbering sequence starting with the lowest number at the upper left corner, as pictured in this manual.

**ASSEMBLY A6.** *Partial Assembly A6 also shown on Schematics 29, 30, and 31.*

| CIRCUIT NUMBER | SCHEM LOCATION | CIRCUIT NUMBER | SCHEM LOCATION |
|---|---|---|---|
| BT134 | F5 | CR975 | B4 |
| | | CR976 | B3 |
| C127 | A5 | CR977 | B4 |
| C139 | A5 | CR978 | B4 |
| C145 | A5 | | |
| C155 | B5 | F298 | C3 |
| C159 | B5 | | |
| C166 | B5 | J186 | F3 |
| | | J187 | F3 |
| C175 | C5 | J495A | A1 |
| C178 | B5 | J495B | B1 |
| C236 | C5 | J495C | C1 |
| C246 | C5 | | |
| C257 | C5 | R117 | G5 |
| C272 | D5 | R119 | G5 |
| | | R126 | F5 |
| C274 | A5 | R179 | F2 |
| C336 | A5 | R258 | G4 |
| C356 | A5 | R259 | G4 |
| C376 | B5 | | |
| C433 | B5 | R268 | G4 |
| C439 | B5 | R526 | E2 |
| | | R954 | C4 |
| C453 | B5 | R964 | D4 |
| C459 | C5 | R975 | E5 |
| C473 | C5 | R976 | B3 |
| C479 | C5 | | |
| C525 | C5 | R977 | B4 |
| C529 | D5 | R978 | D5 |
| | | | |
| C557 | A5 | S196 | E2 |
| C558 | A5 | | |
| C577 | B5 | TP116 | D5 |
| C579 | A5 | TP279 | D5 |
| C675 | B5 | TP916 | D5 |
| C734 | B5 | TP994 | E5 |
| | | | |
| C754 | B5 | U138 | F5 |
| C774 | C5 | U162C | D1 |
| C798 | C5 | U172 | F3 |
| C832 | C5 | U265 | F4 |
| C838 | C5 | U272 | F5 |
| C852 | D5 | U539 | F2 |
| | | | |
| C858 | A5 | U559 | F1 |
| C872 | A5 | U685 | F1 |
| C878 | A5 | U958A | C3 |
| C898 | B5 | U958B | C3 |
| C934 | B5 | U958C | D4 |
| C938 | C3 | U958D | D5 |
| | | | |
| C944 | C4 | U968A | B3 |
| C955 | B5 | U968B | B4 |
| C958 | B5 | U968C | D4 |
| C968 | C5 | U968D | D5 |
| C974 | C5 | | |
| C999 | C5 | | |

*See parts list for earlier serial number ranges.

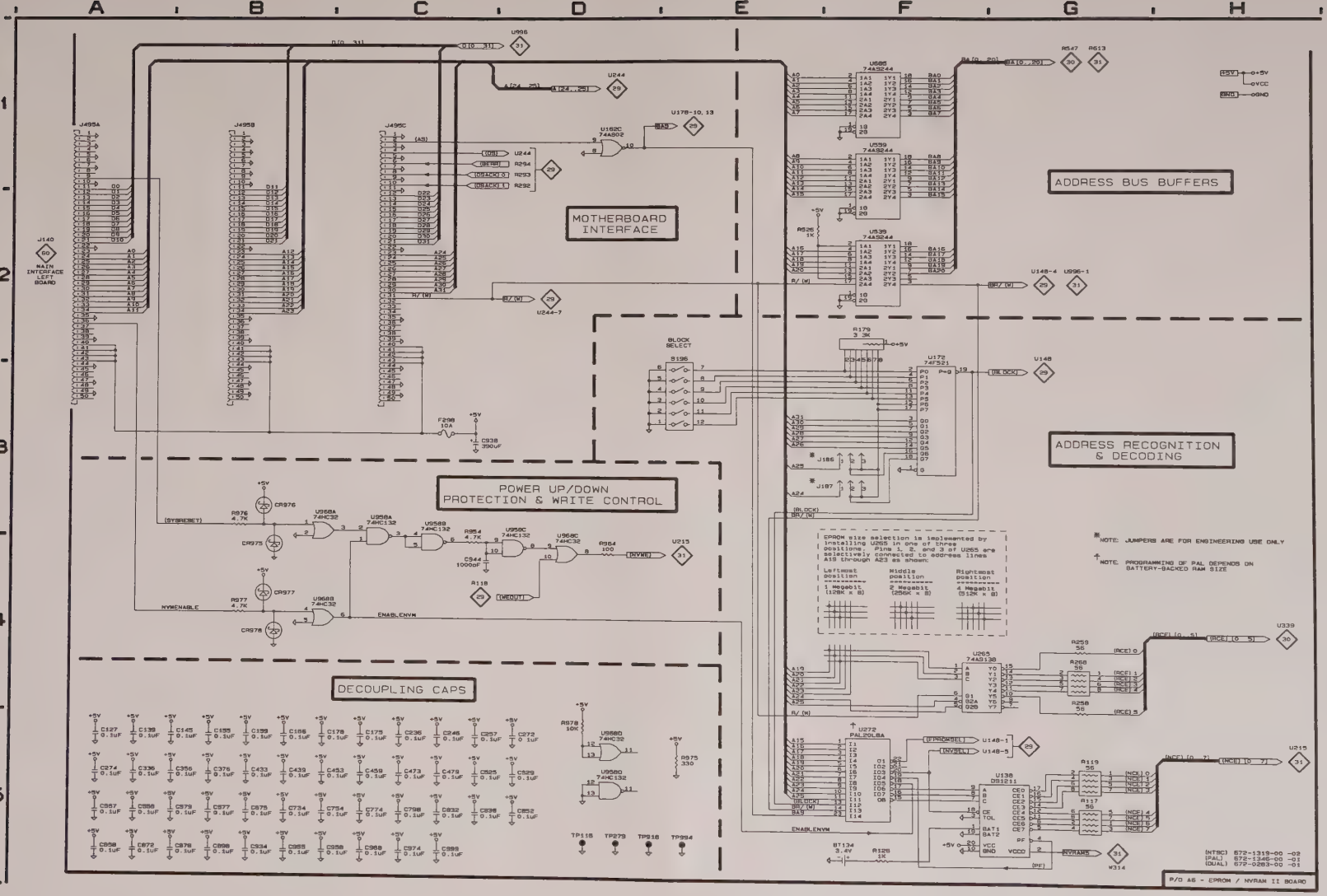
MOTHERBOARD INTERFACE
ADDRESS BUS BUFFERS
ADDRESS RECOGNITION & DECODING
POWER UP/DOWN PROTECTION & WRITE CONTROL
DECOUPLING CAPS
BLOCK SELECT
EPROM size selection is implemented by installing U265 in one of three positions. Pins 1, 2, and 3 of U265 are selectively connected to address lines A19 through A23 as shown:
Leftmost position — 1 Megabit (128K x 8)
Middle position — 2 Megabit (256K x 8)
Rightmost position — 4 Megabit (512K x 8)
* NOTE: JUMPERS ARE FOR ENGINEERING USE ONLY
+ NOTE: PROGRAMMING OF PAL DEPENDS ON BATTERY-BACKED RAM SIZE
P/O A5 - EPROM / NVRAM II BOARD
(NTSC) 672-1319-00 -02
(PAL) 672-1346-00 -01
(DUAL) 672-0283-00 -01

## EPROM BOARD
## Schematic <29> Look-Up Chart

The schematic diagram has an alpha-numeric grid to assist in locating parts within that diagram. The etched circuit boards follow a numbering sequence starting with the lowest number at the upper left corner, as pictured in this manual.

**ASSEMBLY A6.** *Partial Assembly A6 also shown on Schematics 28, 30, and 31.*

| CIRCUIT NUMBER | SCHEM LOCATION |
|---|---|
| C158 | E4 |
| C177 | F4 |
| C237 | C3 |
| C238 | B3 |
| C239 | B3 |
| C255 | B3 |
| C256 | B3 |
| R118 | E2 |
| R157 | F2 |
| R158 | G3 |
| R168 | F4 |
| R169 | F4 |
| R176 | E4 |
| R178 | D3 |
| R235 | E2 |
| R265 | E4 |
| R292 | G3 |
| R293 | G3 |
| R294 | G3 |
| U142 | F3 |
| U148 | D2 |
| U152A | D4 |
| U152B | E3 |
| U162A | G3 |
| U162B | F4 |
| U162D | G4 |
| U168A | G4 |
| U168B | G4 |
| U168C | D4 |
| U168D | E4 |
| U178A | G3 |
| U178B | G4 |
| U178C | D3 |
| U178D | E4 |
| U244 | C2 |

*See parts list for earlier serial number ranges.

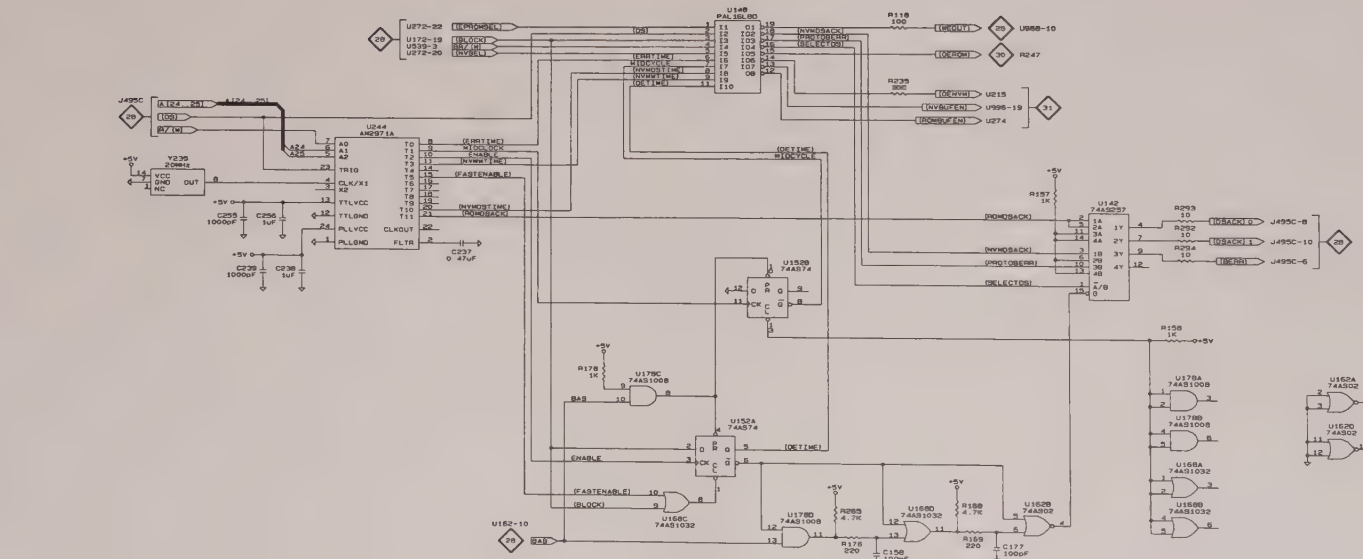


(NTSC) 672-1319-00 -02
(PAL) 672-1346-00 -01
(DUAL) 672-0293-00 -01

P/O A5 - EPROM / NVRAM II BOARD

## EPROM BOARD
## Schematic <30> Look-Up Chart

The schematic diagram has an alpha-numeric grid to assist in locating parts within that diagram. The etched circuit boards follow a numbering sequence starting with the lowest number at the upper left corner, as pictured in this manual.

**ASSEMBLY A6.** *Partial Assembly A6 also shown on Schematics 28, 29, and 31.*

| CIRCUIT NUMBER | SCHEM LOCATION | CIRCUIT NUMBER | SCHEM LOCATION |
|---|---|---|---|
| R247 | B5 | U553 | D3 |
| R248 | B2 | U573 | D1 |
| R249 | B4 | U730 | F4 |
| R547 | B5 | U737 | F5 |
| R548 | B3 | U750 | F2 |
| R549 | B2 | U757 | F3 |
| R568A | B2 | U770 | F1 |
| R568B | B2 | U777 | F1 |
| R633 | B4 | U834 | G4 |
| R635 | B5 | U854 | G2 |
| R637 | B4 | U874 | G1 |
| R643A | B5 | U932 | G5 |
| R643B | B5 | U952 | G3 |
| R643C | B3 | U972 | G1 |
| R643D | B3 | | |
| | | W544 | B2 |
| R645 | B3 | W545 | B4 |
| R647 | B4 | W546 | B5 |
| R653 | B3 | | |
| R655 | B3 | | |
| R657 | B2 | | |
| R661 | B1 | | |
| R663 | B1 | | |
| R665 | B2 | | |
| R667 | B1 | | |
| U333 | C4 | | |
| U339 | C5 | | |
| U353 | C2 | | |
| U359 | C3 | | |
| U373 | C1 | | |
| U379 | C1 | | |
| U436 | D4 | | |
| U456 | D2 | | |
| U476 | D1 | | |
| U533 | D5 | | |

*See parts list for earlier serial number ranges.

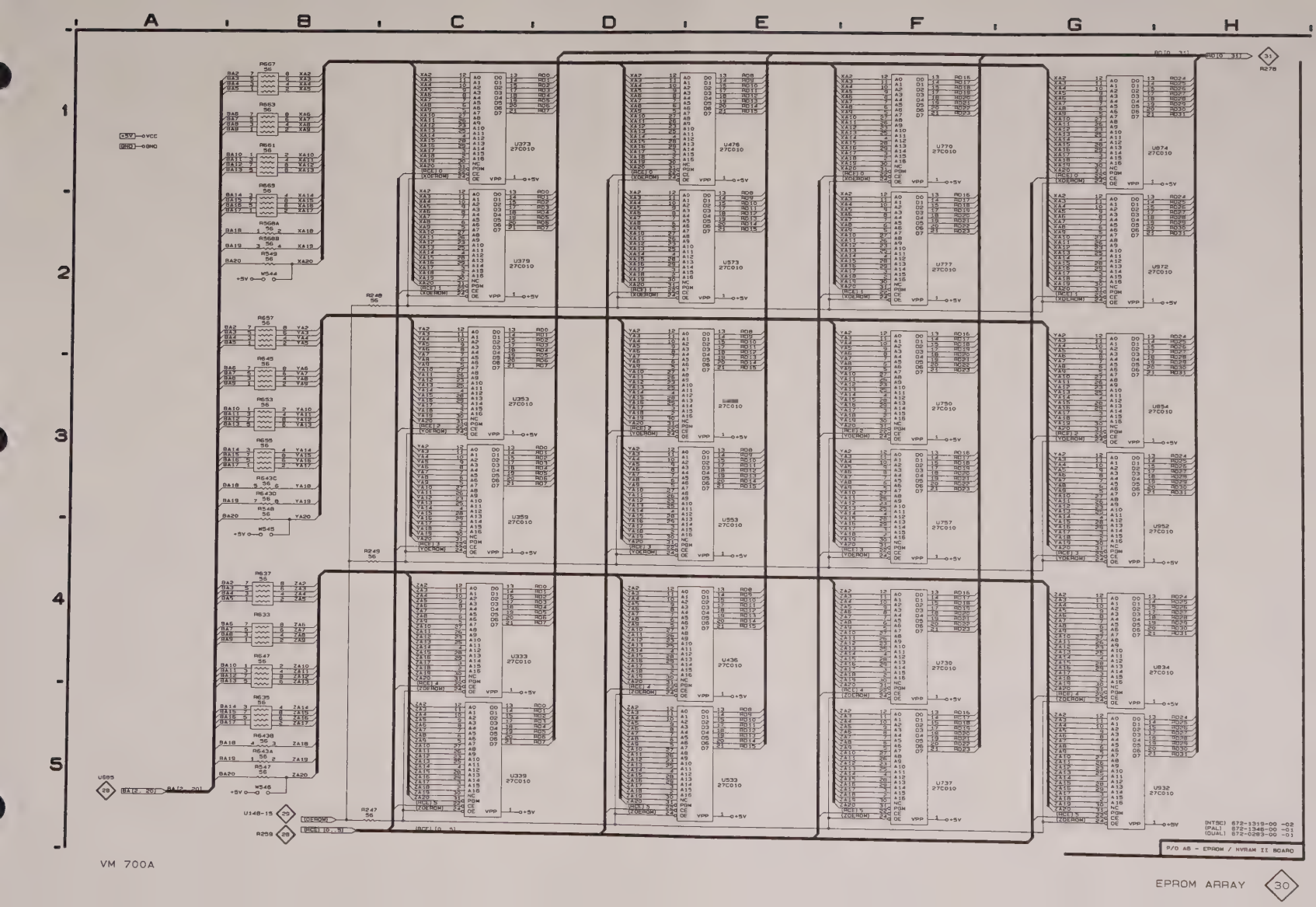
A
B
C
D
E
F
G
H
1
2
3
4
5
VM 700A
EPROM ARRAY
30
P/O A6 - EPROM / NVRAM II BOARD

## EPROM BOARD
## Schematic <31> Look-Up Chart

The schematic diagram has an alpha-numeric grid to assist in locating parts within that diagram. The etched circuit boards follow a numbering sequence starting with the lowest number at the upper left corner, as pictured in this manual.

**ASSEMBLY A6.** *Partial Assembly A6 also shown on Schematics 28, 29, and 30.*

| CIRCUIT NUMBER | SCHEM LOCATION | CIRCUIT NUMBER | SCHEM LOCATION |
|---|---|---|---|
| C313 | C2 | R990 | G4 |
| C315 | C2 | | |
| C323 | C3 | U215 | D1 |
| C325 | C3 | U225 | D2 |
| C418 | C4 | U274 | G1 |
| | | U415 | D3 |
| C428 | C5 | U425 | D4 |
| C510 | C4 | | |
| C523 | C5 | U589 | G2 |
| C716 | E2 | U713 | E1 |
| C718 | E2 | U723 | E2 |
| | | U794 | G3 |
| C726 | E3 | U816 | E3 |
| C728 | E3 | | |
| C912 | E4 | U826 | E4 |
| C914 | E4 | U894 | G4 |
| C922 | E5 | U996 | G5 |
| | | | |
| C924 | E5 | W314 | C2 |
| C926 | E1 | W324 | C3 |
| C984 | F4 | W419 | C4 |
| | | W429 | C5 |
| CR974 | F4 | W522 | B2 |
| | | | |
| R278 | G1 | W717 | E2 |
| R515 | B2 | W727 | E3 |
| R517 | B2 | W913 | E4 |
| R519 | B1 | W923 | E5 |
| R521 | B2 | | |
| | | | |
| R523 | B2 | | |
| R524 | B2 | | |
| R613 | B1 | | |
| R673 | G2 | | |
| R788 | G3 | | |
| | | | |
| R888 | G4 | | |
| R974 | F4 | | |
| R988 | G5 | | |
| R989 | F5 | | |

*See parts list for earlier serial number ranges.

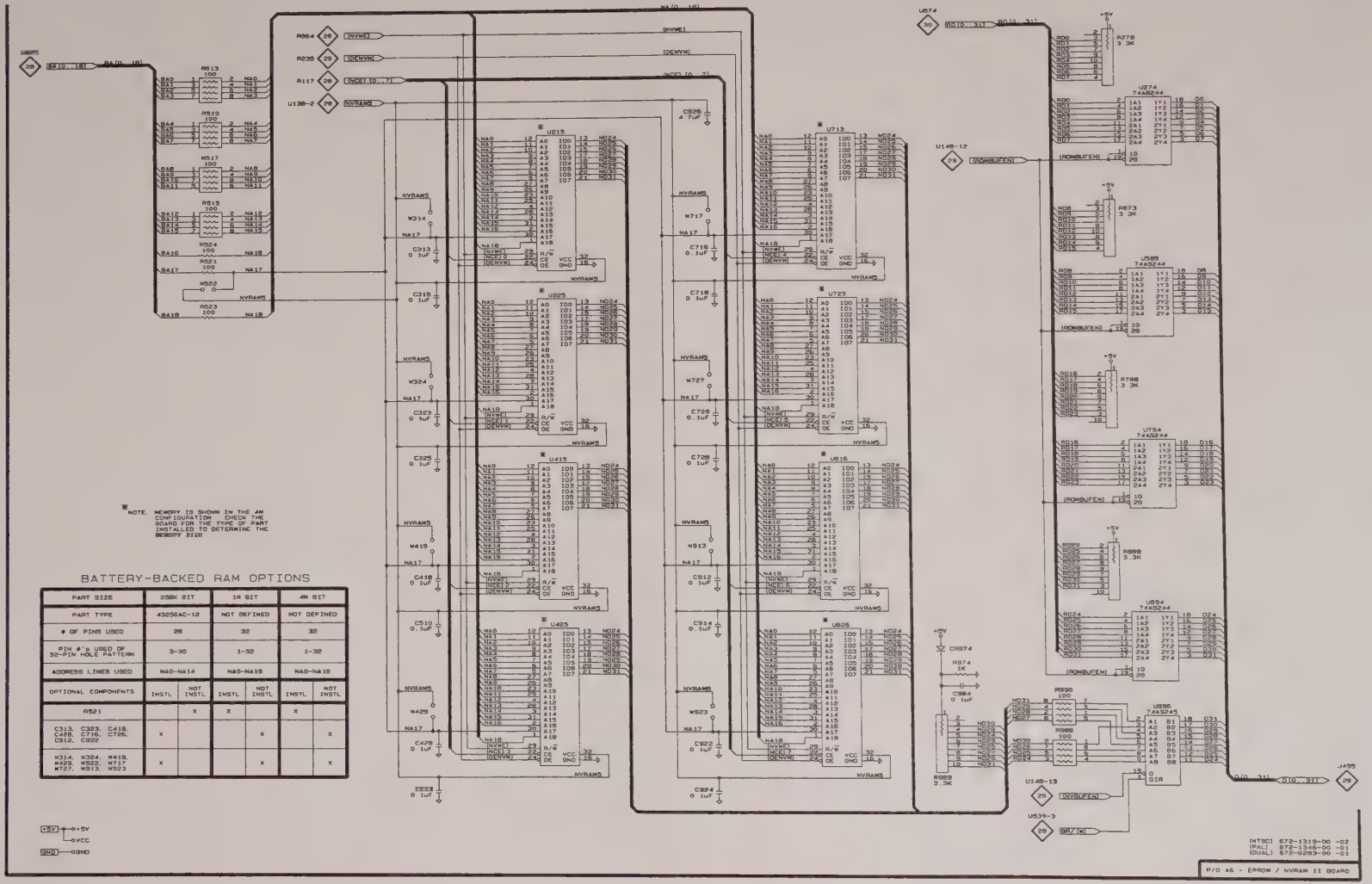


* NOTE. MEMORY IS SHOWN IN THE 4M CONFIGURATION. CHECK THE BOARD FOR THE TYPE OF PART INSTALLED TO DETERMINE THE MEMORY SIZE

BATTERY-BACKED RAM OPTIONS

| PART SIZE | 256K BIT | | 1M BIT | | 4M BIT | |
|---|---|---|---|---|---|---|
| PART TYPE | 43256AC-12 | | NOT DEFINED | | NOT DEFINED | |
| # OF PINS USED | 28 | | 32 | | 32 | |
| PIN #'s USED OF 32-PIN HOLE PATTERN | 3-30 | | 1-32 | | 1-32 | |
| ADDRESS LINES USED | A0-A14 | | A0-A18 | | A0-A18 | |
| OPTIONAL COMPONENTS | INSTL | NOT INSTL | INSTL | NOT INSTL | INSTL | NOT INSTL |
| R521 | | X | X | | X | |
| C313, C323, C418, C428, C716, C726, C912, C922 | X | | | X | | X |
| W314, W324, W419, W429, W522, W717, W727, W913, W923 | X | | | X | | X |

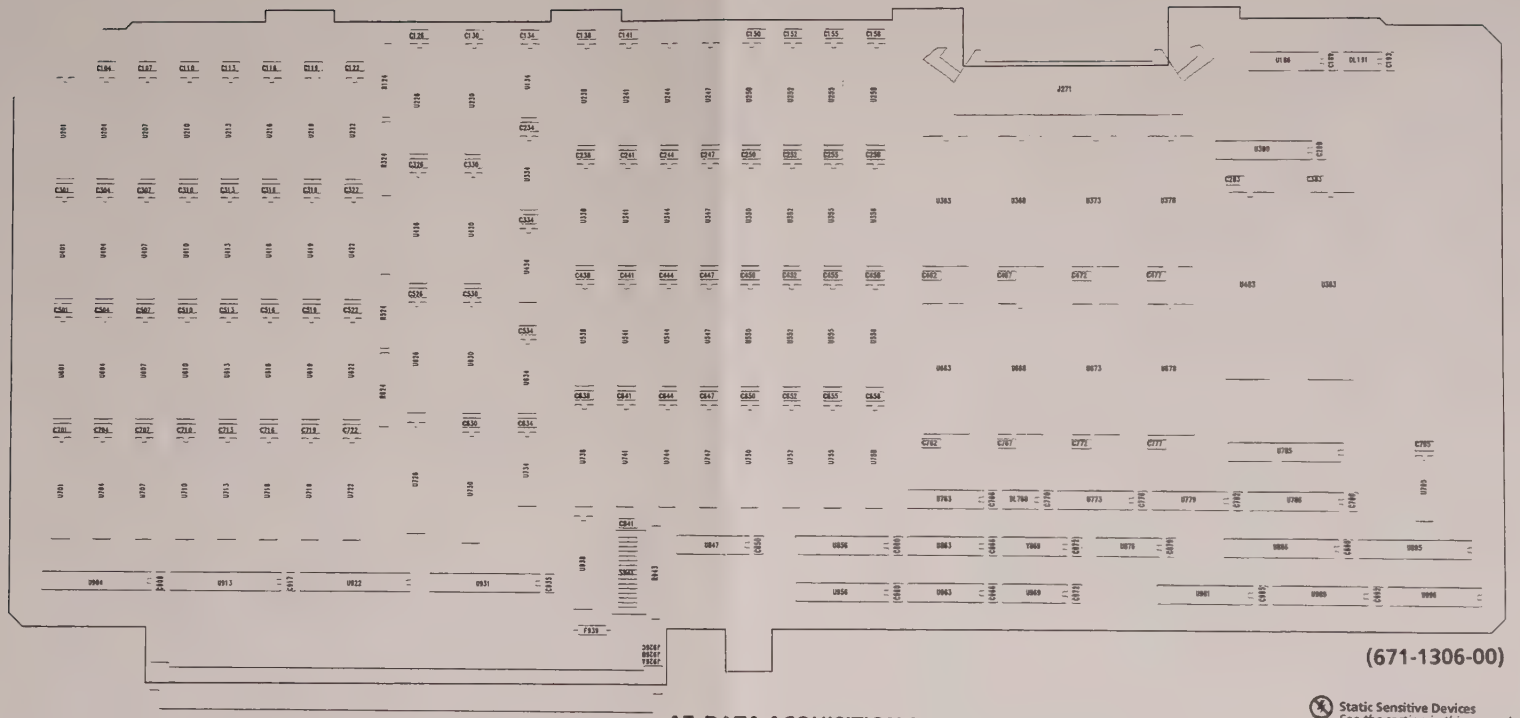

(671-1306-00)

## A7 DATA ACQUISITION 2 BOARD

Static Sensitive Devices
*See the section in this manual on handling precautions for static sensitive components.*

### DATA ACQUISITION BOARD Schematic <32> Look-Up Chart

The schematic diagram has an alpha-numeric grid to assist in locating parts within that diagram. The etched circuit boards follow a numbering sequence starting with the lowest number at the upper left corner, as pictured in this manual.

**ASSEMBLY A7.** *Partial Assembly A7 also shown on Schematics 33, 34, 35, 36, 37, 38, 39, and 40.*

*See parts list for earlier serial number ranges.

| CIRCUIT NUMBER | SCHEM LOCATION | CIRCUIT NUMBER | SCHEM LOCATION |
|---|---|---|---|
| DL768 | B4 | U904 | G1 |
| | | U913 | G2 |
| R943 | A1 | U922 | G2 |
| | | U931 | G3 |
| S941 | A2 | U938 | B1 |
| | | U956 | E4 |
| U763A | B4 | U963A | C2 |
| U763B | C4 | U963B | C3 |
| U773A | F3 | U969A | B2 |
| U773B | F2 | U969B | C1 |
| U773C | F2 | U969C | C5 |
| U779 | E2 | U969D | B4 |
| U856 | E4 | U981 | D5 |
| U863A | C1 | | |
| U863B | C2 | Y869 | A4 |

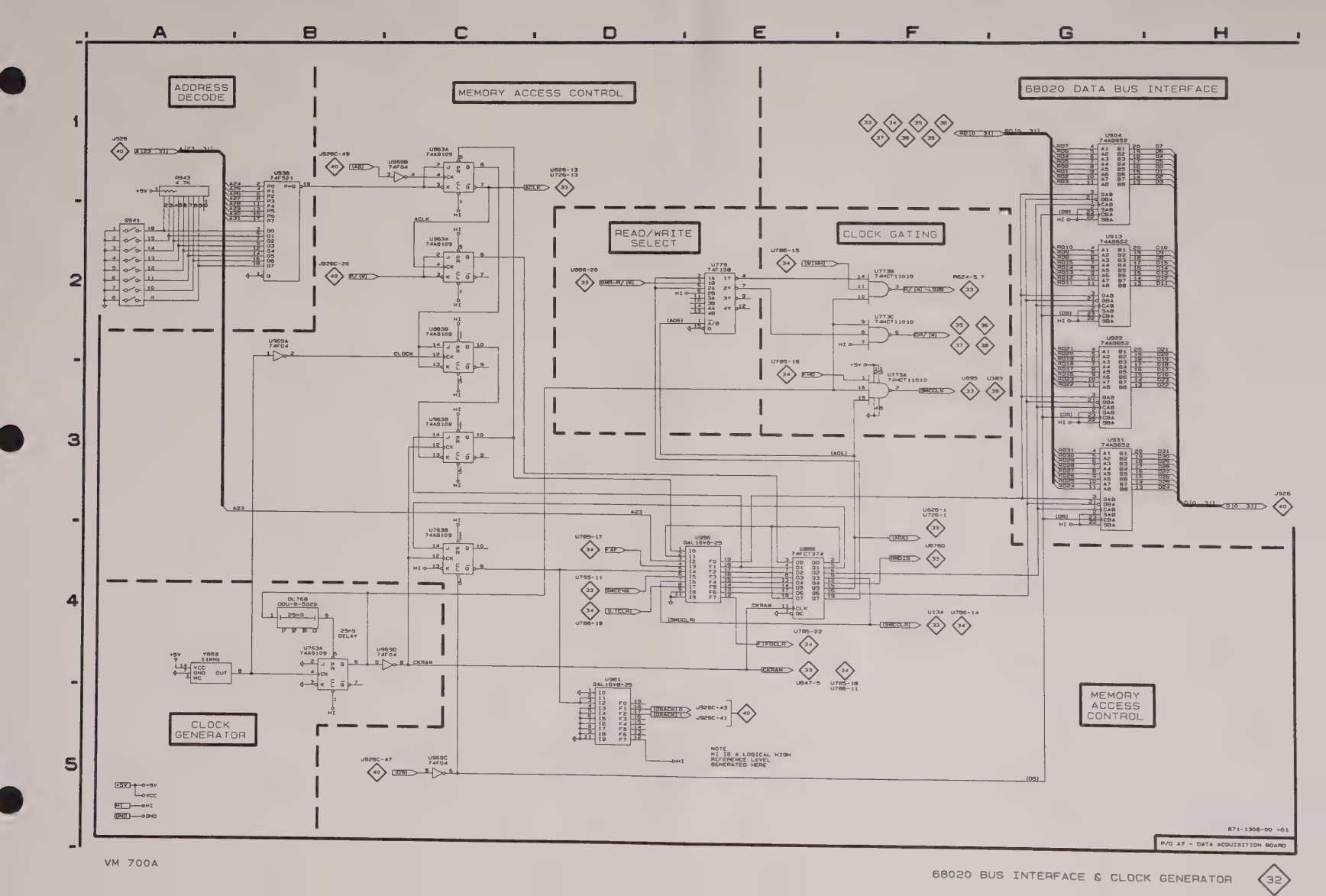
ADDRESS DECODE
MEMORY ACCESS CONTROL
68020 DATA BUS INTERFACE
READ/WRITE SELECT
CLOCK GATING
CLOCK GENERATOR
MEMORY ACCESS CONTROL
NOTE
HI IS A LOGICAL HIGH REFERENCE LEVEL GENERATED HERE
671-1306-00 -01
P/O A7 - DATA ACQUISITION BOARD

## DATA ACQUISITION BOARD
## Schematic <33> Look-Up Chart

The schematic diagram has an alpha-numeric grid to assist in locating parts within that diagram. The etched circuit boards follow a numbering sequence starting with the lowest number at the upper left corner, as pictured in this manual.

**ASSEMBLY A7.** *Partial Assembly A7 also shown on Schematics 32, 34, 35, 36, 37, 38, 39, and 40.*

| CIRCUIT NUMBER | SCHEM LOCATION |
|---|---|
| R124 | G3 |
| R324 | G4 |
| R524 | G4 |
| R624 | G4 |
| U134 | D3 |
| U186A | D2 |
| U226 | F2 |
| U230 | E3 |
| U334 | D3 |
| U426 | F2 |
| U430 | E4 |
| U434 | D4 |
| U626 | G2 |
| U630 | C4 |
| U634 | D4 |
| U726 | G2 |
| U730 | C5 |
| U734 | D5 |
| U795A | D2 |
| U795B | G1 |
| U795C | C2 |
| U795D | C2 |
| U847 | G5 |
| U876A | F1 |
| U876B | F1 |
| U876C | F1 |
| U876D | B3 |
| U886 | C1 |
| U895 | C1 |
| U969E | D2 |
| U989 | B1 |
| U996 | B1 |

*See parts list for earlier serial number ranges.

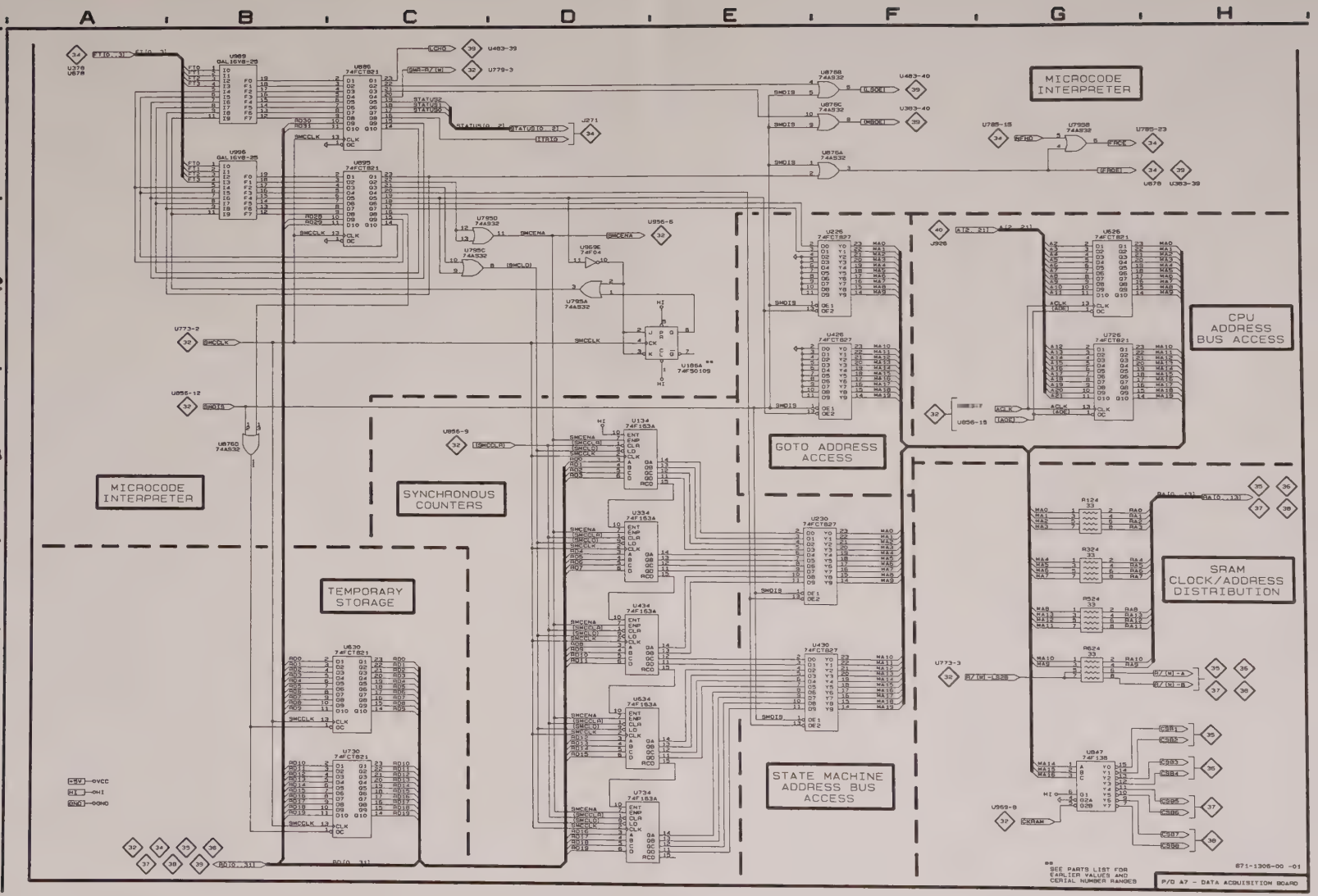
MICROCODE INTERPRETER
CPU ADDRESS BUS ACCESS
GOTO ADDRESS ACCESS
MICROCODE INTERPRETER
SYNCHRONOUS COUNTERS
SRAM CLOCK/ADDRESS DISTRIBUTION
TEMPORARY STORAGE
STATE MACHINE ADDRESS BUS ACCESS
SEE PARTS LIST FOR EARLIER VALUES AND SERIAL NUMBER RANGES
671-1306-00 -01
P/O A7 - DATA ACQUISITION BOARD

## DATA ACQUISITION BOARD
## Schematic <34> Look-Up Chart

The schematic diagram has an alpha-numeric grid to assist in locating parts within that diagram. The etched circuit boards follow a numbering sequence starting with the lowest number at the upper left corner, as pictured in this manual.

**ASSEMBLY A7.** *Partial Assembly A7 also shown on Schematics 32, 33, 35, 36, 37, 38, 39, and 40.*

| CIRCUIT NUMBER | SCHEM LOCATION |
|---|---|
| DL191 | C1 |
| J271 | A1 |
| U186B | C2 |
| U363 | G1 |
| U368 | G2 |
| U373 | G3 |
| U378 | G4 |
| U390 | D2 |
| U663 | E1 |
| U668 | E2 |
| U673 | E3 |
| U678 | E4 |
| U785 | C4 |
| U786 | B4 |

*See parts list for earlier serial number ranges.

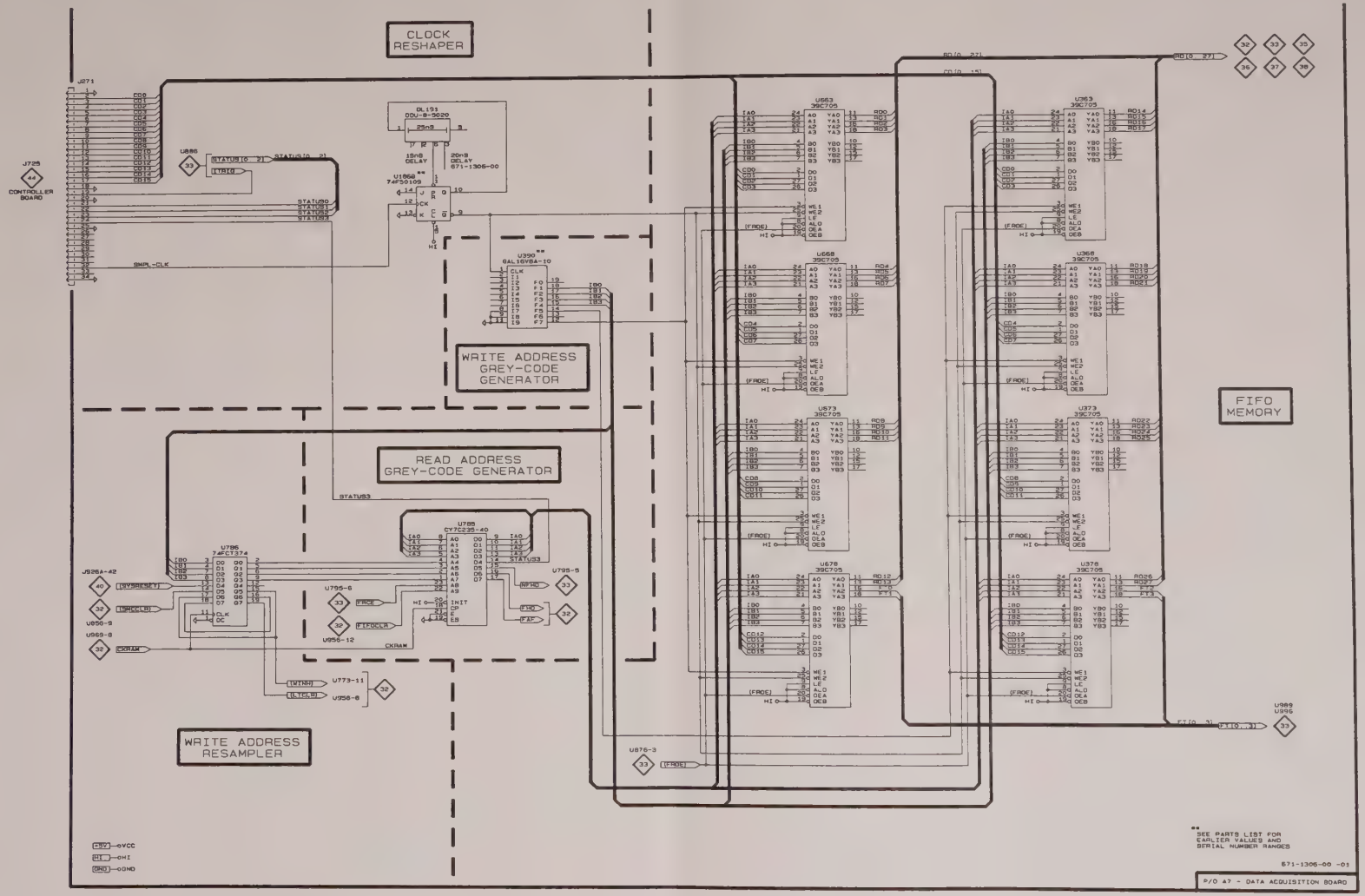
CLOCK RESHAPER
WRITE ADDRESS GREY-CODE GENERATOR
READ ADDRESS GREY-CODE GENERATOR
WRITE ADDRESS RESAMPLER
FIFO MEMORY
CONTROLLER BOARD
SMPL-CLK
STATUS0
STATUS1
STATUS2
STATUS3
CKRAM
(FRDE)
SEE PARTS LIST FOR EARLIER VALUES AND SERIAL NUMBER RANGES
671-1306-00 -01
P/O A7 - DATA ACQUISITION BOARD

## DATA ACQUISITION BOARD
## Schematic <35> Look-Up Chart

The schematic diagram has an alpha-numeric grid to assist in locating parts within that diagram. The etched circuit boards follow a numbering sequence starting with the lowest number at the upper left corner, as pictured in this manual.

**ASSEMBLY A7.** *Partial Assembly A7 also shown on Schematics 32, 33, 34, 36, 37, 38, 39, and 40.*

| CIRCUIT NUMBER | SCHEM LOCATION |
|---|---|
| U701 | B1 |
| U704 | B2 |
| U707 | B3 |
| U710 | B4 |
| U713 | C1 |
| U716 | C2 |
| U719 | C3 |
| U722 | C4 |
| U738 | E1 |
| U741 | E2 |
| U744 | E3 |
| U747 | E4 |
| U750 | G1 |
| U752 | G2 |
| U755 | G3 |
| U758 | G4 |

*See parts list for earlier serial number ranges.

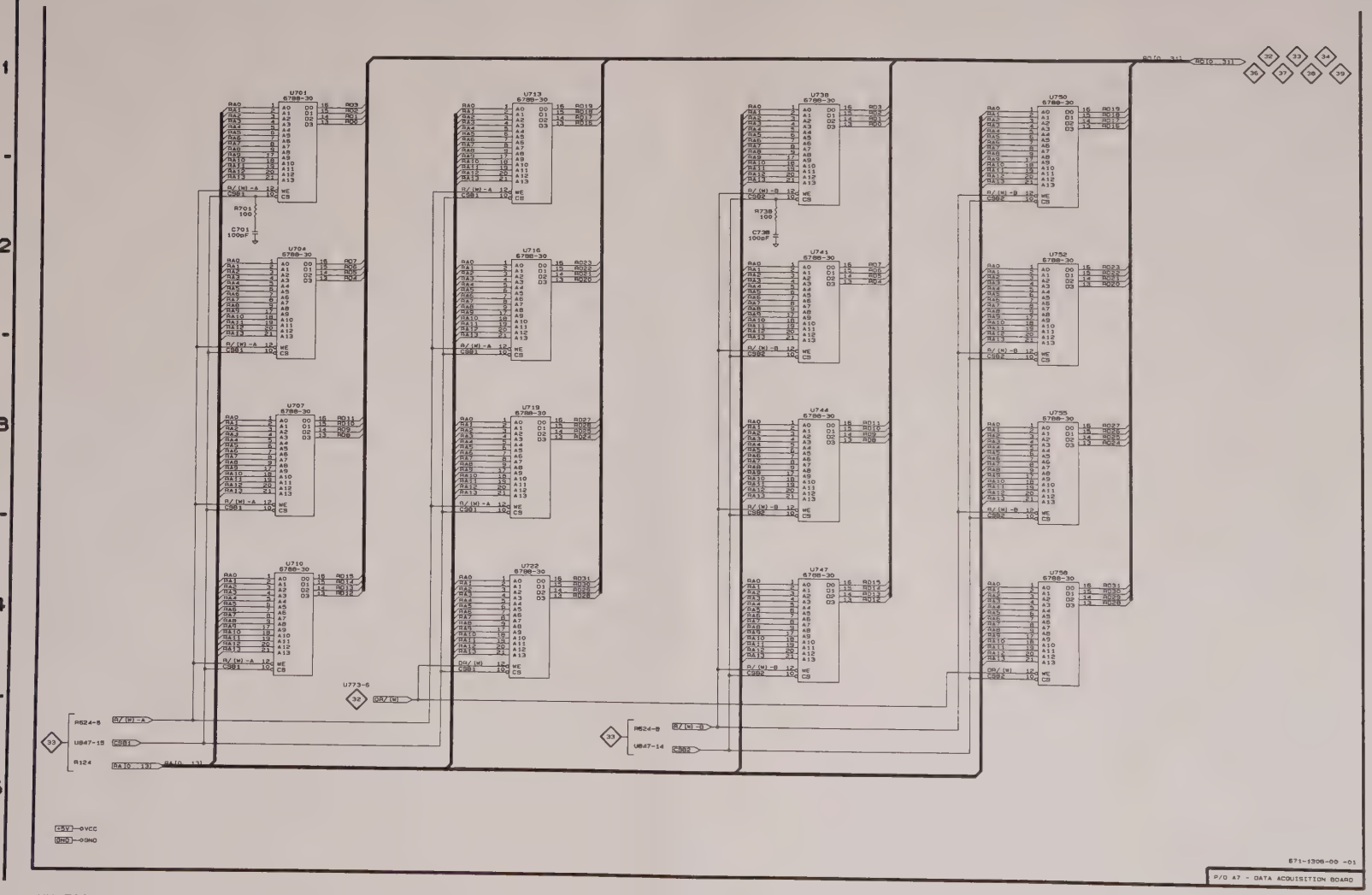
A
B
C
D
E
F
G
H
1
2
3
4
5
U701
6788-30
U704
6788-30
U707
6788-30
U710
6788-30
U713
6788-30
U716
6788-30
U719
6788-30
U722
6788-30
U738
6788-30
U741
6788-30
U744
6788-30
U747
6788-30
U750
6788-30
U752
6788-30
U755
6788-30
U756
6788-30
R701 100
C701 100pF
R738 100
C738 100pF
U773-6
R624-8
U847-15
R124
R624-8
U847-14
+5V—0VCC
GND—0GND
671-1306-00 -01
P/O A7 - DATA ACQUISITION BOARD

## DATA ACQUISITION BOARD
## Schematic <36> Look-Up Chart

The schematic diagram has an alpha-numeric grid to assist in locating parts within that diagram. The etched circuit boards follow a numbering sequence starting with the lowest number at the upper left corner, as pictured in this manual.

**ASSEMBLY A7.** *Partial Assembly A7 also shown on Schematics 32, 33, 34, 35, 37, 38, 39, and 40.*

| CIRCUIT NUMBER | SCHEM LOCATION |
|---|---|
| U538 | E1 |
| U541 | E2 |
| U544 | E3 |
| U547 | E4 |
| U550 | G1 |
| U552 | G2 |
| U555 | G3 |
| U558 | G4 |
| U601 | B1 |
| U604 | B2 |
| U607 | B3 |
| U610 | B4 |
| U613 | C1 |
| U616 | C2 |
| U619 | C3 |
| U622 | C4 |

*See parts list for earlier serial number ranges.

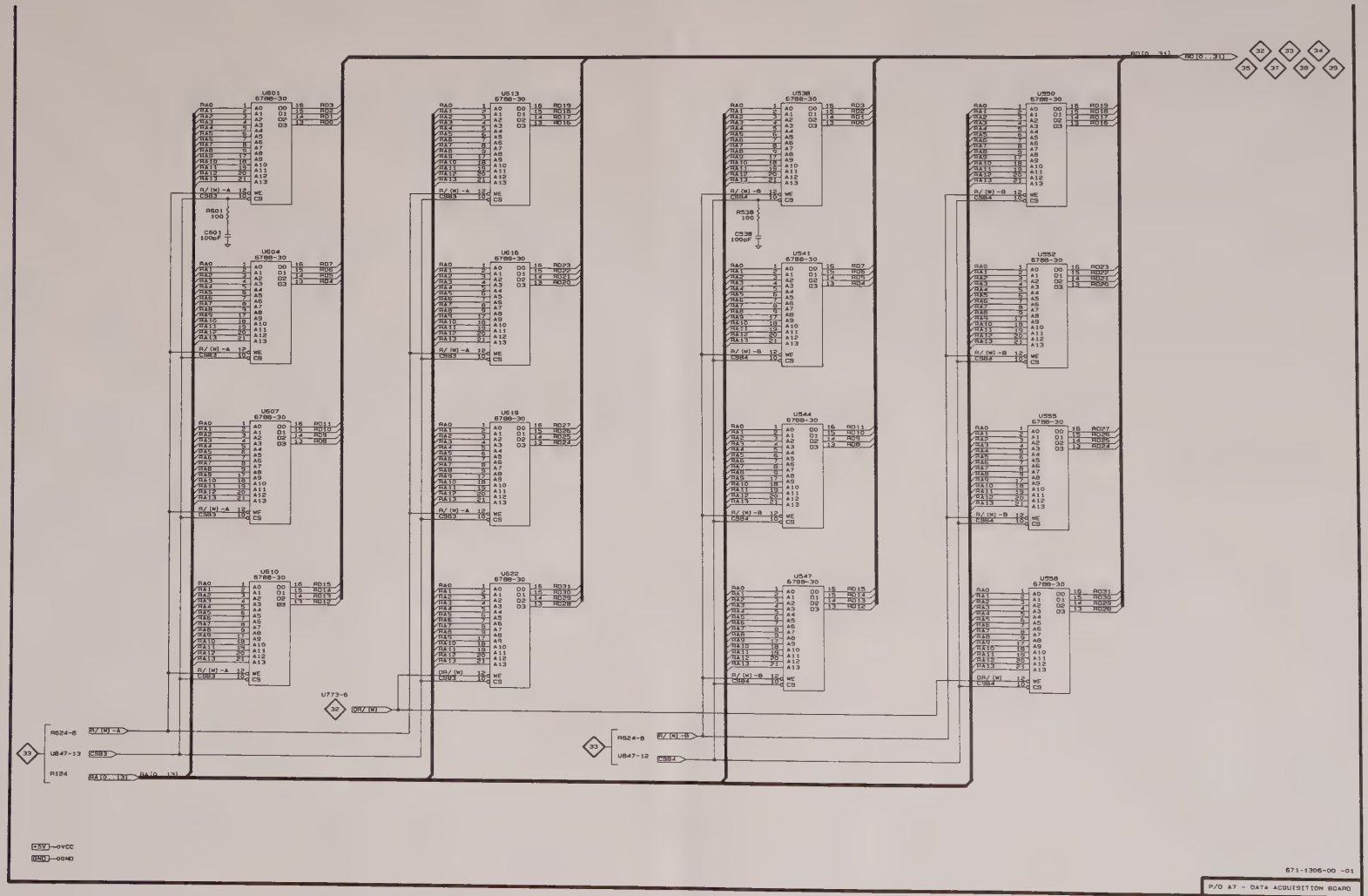

A B C D E F G H
1 2 3 4 5
U601 6788-30
U604 6788-30
U607 6788-30
U610 6788-30
U613 6788-30
U616 6788-30
U619 6788-30
U622 6788-30
U538 6788-30
U541 6788-30
U544 6788-30
U547 6788-30
U550 6788-30
U552 6788-30
U555 6788-30
U558 6788-30
R601 100
C601 100pF
R538 100
C538 100pF
U773-6
R624-6
U847-13
R124
R624-8
U847-12
+5V —VCC
GND —GND
671-1306-00 -01
P/O A7 - DATA ACQUISITION BOARD

## DATA ACQUISITION BOARD
## Schematic <37> Look-Up Chart

The schematic diagram has an alpha-numeric grid to assist in locating parts within that diagram. The etched circuit boards follow a numbering sequence starting with the lowest number at the upper left corner, as pictured in this manual.

**ASSEMBLY A7.** *Partial Assembly A7 also shown on Schematics 32, 33, 34, 35, 36, 38, 39, and 40.*

| CIRCUIT NUMBER | SCHEM LOCATION |
|---|---|
| U338 | E1 |
| U341 | E2 |
| U344 | E3 |
| U347 | E4 |
| U350 | G1 |
| U352 | G2 |
| U355 | G3 |
| U358 | G4 |
| U401 | B1 |
| U404 | B2 |
| U407 | B3 |
| U410 | B4 |
| U413 | C1 |
| U416 | C2 |
| U419 | C3 |
| U422 | C4 |

*See parts list for earlier serial number ranges.

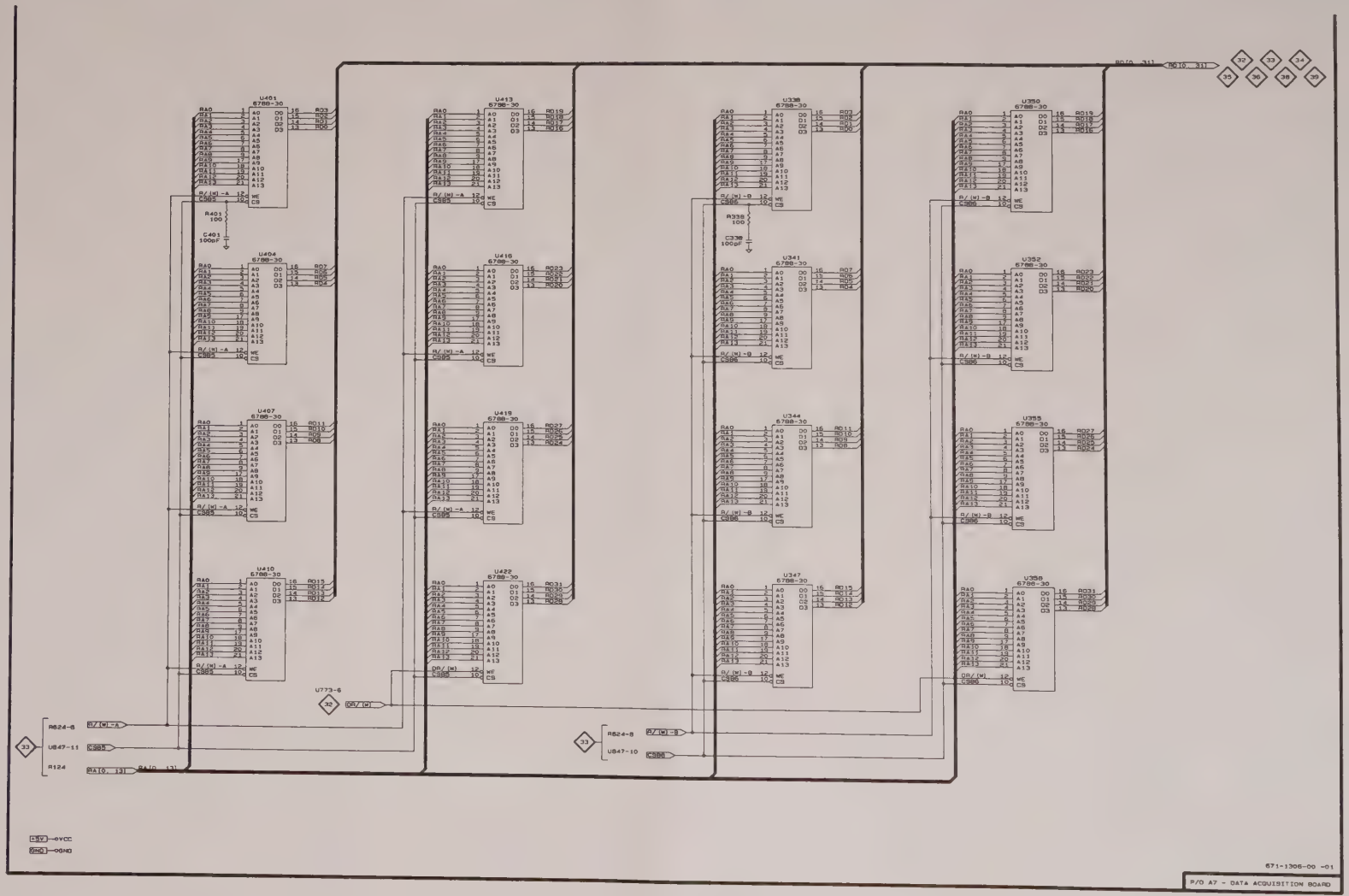

A B C D E F G H
1 2 3 4 5
U401 6788-30
U404 6788-30
U407 6788-30
U410 6788-30
U413 6788-30
U416 6788-30
U419 6788-30
U422 6788-30
U338 6788-30
U341 6788-30
U344 6788-30
U347 6788-30
U350 6788-30
U352 6788-30
U355 6788-30
U358 6788-30
R401 100
C401 100pF
R338 100
C338 100pF
U773-6
R624-8
U847-11
R124
R624-8
U847-10
+5V—VCC
GND—GND
671-1306-00 -01
P/O A7 - DATA ACQUISITION BOARD

## DATA ACQUISITION BOARD
## Schematic <38> Look-Up Chart

The schematic diagram has an alpha-numeric grid to assist in locating parts within that diagram. The etched circuit boards follow a numbering sequence starting with the lowest number at the upper left corner, as pictured in this manual.

**ASSEMBLY A7.** *Partial Assembly A7 also shown on Schematics 32, 33, 34, 35, 36, 37, 39, and 40.*

| CIRCUIT NUMBER | SCHEM LOCATION |
|---|---|
| U201 | B1 |
| U204 | B2 |
| U207 | B3 |
| U210 | B4 |
| U213 | C1 |
| U216 | C2 |
| U219 | C3 |
| U222 | C4 |
| U238 | E1 |
| U241 | E2 |
| U244 | E3 |
| U247 | E4 |
| U250 | G1 |
| U252 | G2 |
| U255 | G3 |
| U258 | G4 |

*See parts list for earlier serial number ranges.

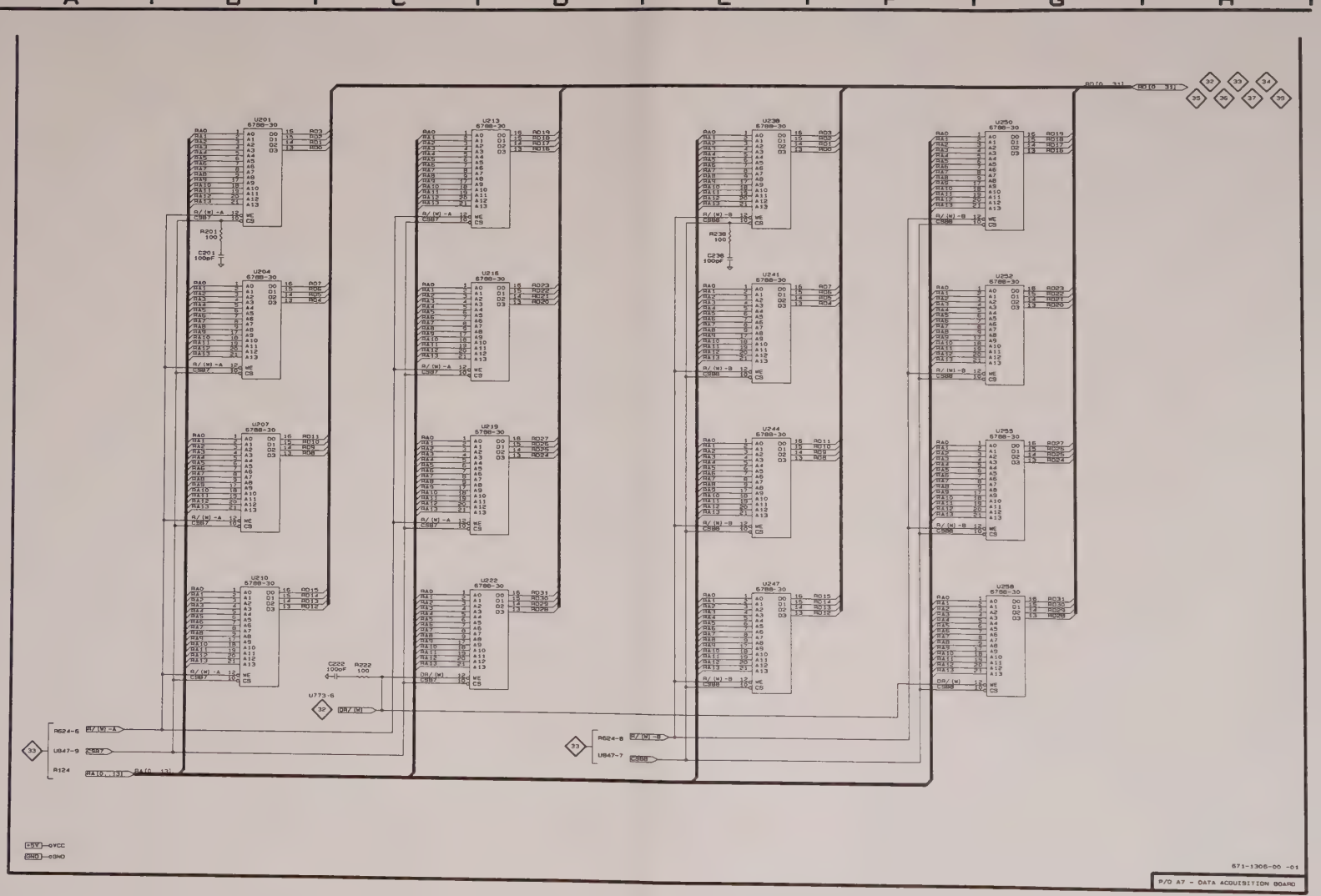
A
B
C
D
E
F
G
H
1
2
3
4
5
U201
U204
U207
U210
U213
U216
U219
U222
U238
U241
U244
U247
U250
U252
U255
U258
6788-30
R201 100
C201 100pF
R238 100
C238 100pF
C222 100pF
R222 100
U773-6
R624-5
U847-9
R124
R624-8
U847-7
671-1306-00 -01
P/O A7 - DATA ACQUISITION BOARD

## DATA ACQUISITION BOARD
## Schematic <39> Look-Up Chart

The schematic diagram has an alpha-numeric grid to assist in locating parts within that diagram. The etched circuit boards follow a numbering sequence starting with the lowest number at the upper left corner, as pictured in this manual.

**ASSEMBLY A7.** *Partial Assembly A7 also shown on Schematics 32, 33, 34, 35, 36, 37, 38, and 40.*

| CIRCUIT NUMBER | SCHEM LOCATION |
|---|---|
| U383 | E2 |
| U483 | E3 |

*See parts list for earlier serial number ranges.

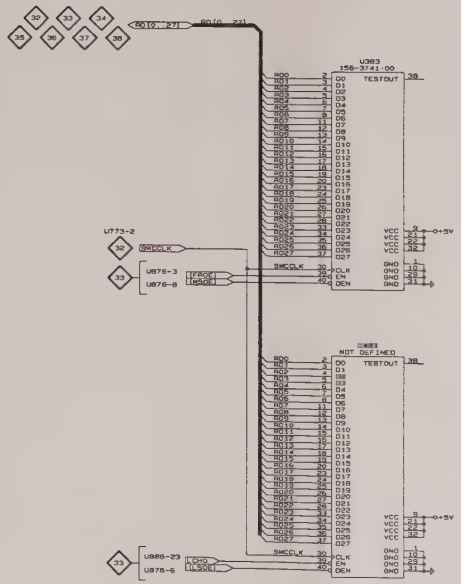


671-1305-00 -01

P/O A7 - DATA ACQUISITION BOARD

## DATA ACQUISITION BOARD
## Schematic <40> Look-Up Chart

The schematic diagram has an alpha-numeric grid to assist in locating parts within that diagram. The etched circuit boards follow a numbering sequence starting with the lowest number at the upper left corner, as pictured in this manual.

**ASSEMBLY A7.** *Partial Assembly A7 also shown on Schematics 32, 33, 34, 35, 36, 37, 38, and 39.*

| CIRCUIT NUMBER | SCHEM LOCATION | CIRCUIT NUMBER | SCHEM LOCATION | CIRCUIT NUMBER | SCHEM LOCATION |
|---|---|---|---|---|---|
| C104 | A4 | C383 | D5 | C719 | G5 |
| C107 | B4 | C438 | E5 | C722 | A5 |
| C110 | B4 | C441 | E5 | C762 | B5 |
| C113 | B4 | C444 | E5 | C766 | B5 |
| C116 | B4 | C447 | E5 | C767 | B5 |
| C119 | C4 | C450 | F5 | C770 | B5 |
| C122 | C4 | C452 | F5 | C772 | C5 |
| C126 | C4 | C455 | F5 | C776 | C5 |
| C130 | C4 | C458 | F5 | C777 | C5 |
| C134 | C4 | C462 | G5 | C782 | C5 |
| C138 | D4 | C467 | G5 | C790 | C5 |
| C141 | D4 | C472 | G5 | C795 | D5 |
| C150 | D4 | C477 | G5 | C841 | D5 |
| C152 | D4 | C501 | G5 | C850 | D5 |
| C155 | E4 | C504 | A5 | C860 | D5 |
| C158 | E4 | C507 | B5 | C866 | E5 |
| C189 | E4 | C510 | B5 | C872 | E5 |
| C193 | E4 | C513 | B5 | C879 | E5 |
| C234 | F4 | C516 | B5 | C890 | E5 |
| C238 | F4 | C519 | C5 | C908 | F5 |
| C241 | F4 | C522 | C5 | C917 | F5 |
| C244 | F4 | C526 | C5 | C935 | F5 |
| C247 | G4 | C530 | C5 | C960 | F5 |
| C250 | G4 | C534 | C5 | C966 | G5 |
| C252 | G4 | C630 | D5 | C972 | G5 |
| C255 | G4 | C634 | D5 | C985 | G5 |
| C258 | G4 | C638 | D5 | C992 | G |
| C283 | A5 | C641 | D5 | | |
| C290 | B5 | C644 | E5 | F939 | D1 |
| C301 | B5 | C647 | E5 | | |
| | | | | J926A | A1 |
| C304 | B5 | C650 | E5 | J926B | B1 |
| C307 | B5 | C652 | E5 | J926C | C1 |
| C310 | C5 | C655 | F5 | | |
| C313 | C5 | C658 | F5 | | |
| C316 | C5 | C701 | F5 | | |
| C319 | C5 | C704 | F5 | | |
| C322 | C5 | C707 | G5 | | |
| C326 | D5 | C710 | G5 | | |
| C330 | D5 | C713 | G5 | | |
| C334 | D5 | C716 | G5 | | |

*See parts list for earlier serial number ranges.

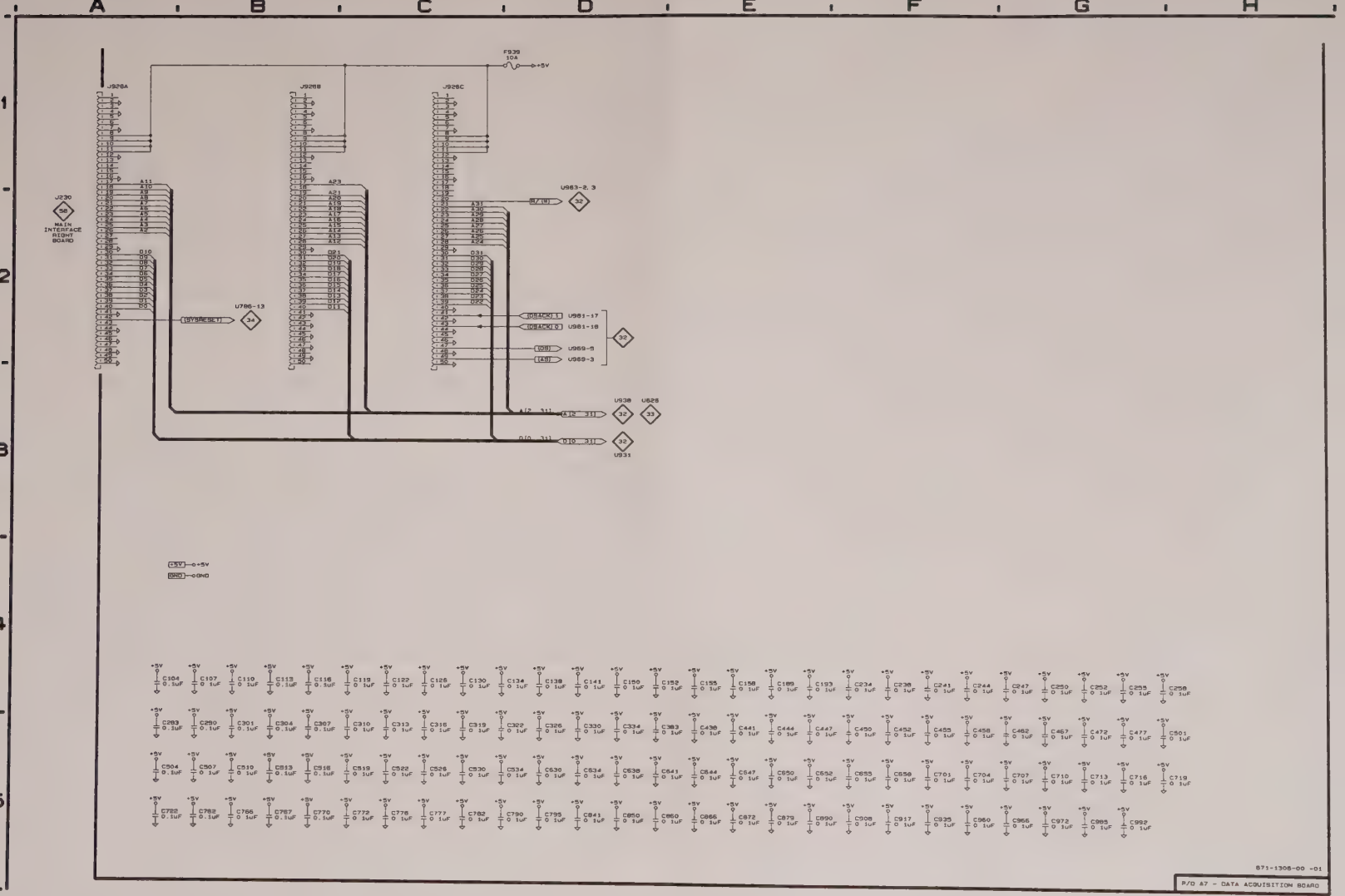

A B C D E F G H
1 2 3 4 5
F939 10A
+5V
J926A
J926B
J926C
J230
56
MAIN INTERFACE RIGHT BOARD
U963-2, 3
32
U786-13
34
(SYSRESET)
(DSACK) 1
(DSACK) 0
(DS)
(AS)
U981-17
U981-18
U969-5
U969-3
U938
U626
U931
A(2 31)
D(0 31)
+5V
GND
871-1308-00 -01
P/O A7 - DATA ACQUISITION BOARD

MOTHERBOARD INTERFACE
& DECOUPLING CAPS <40>

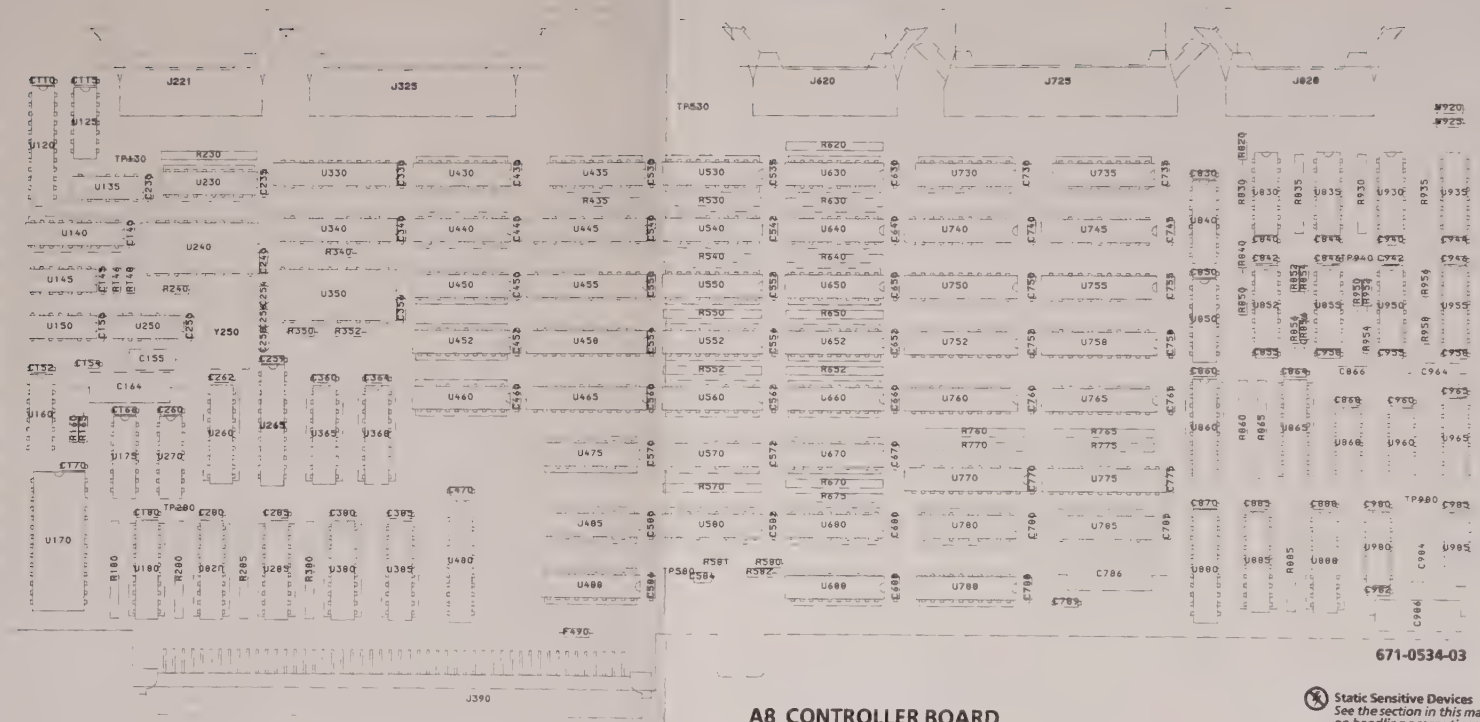


671-0534-03

## A8 CONTROLLER BOARD

**Static Sensitive Devices**
*See the section in this manual on handling precautions for static sensitive components.*

### CONTROLLER BOARD
### Schematic <41> Look-Up Chart

The schematic diagram has an alpha-numeric grid to assist in locating parts within that diagram. The etched circuit boards follow a numbering sequence starting with the lowest number at the upper left corner, as pictured in this manual.

**ASSEMBLY A8.** *Partial Assembly A8 also shown on Schematics 42, 43, 44, 45, and 46.*

***See parts list for earlier serial number ranges.**

| CIRCUIT NUMBER | SCHEM LOCATION | CIRCUIT NUMBER | SCHEM LOCATION |
|---|---|---|---|
| C155 | B4 | TP130 | B4 |
| C164 | B4 | TP280 | B4 |
| C786 | B4 | TP530 | B4 |
| C964 | B4 | TP580 | B4 |
| C984 | B4 | TP940 | B4 |
| C986 | B4 | TP980 | C4 |
| F490 | D1 | U180 | G4 |
| | | U280 | G4 |
| J390A | A1 | U285 | G4 |
| J390B | B1 | U365 | E2 |
| J390C | C1 | U380 | G3 |
| | | U385 | E4 |
| R180 | F4 | U480 | E3 |
| R280 | F4 | U485 | E4 |
| R285 | F4 | U488 | E5 |
| R380 | F3 | | |

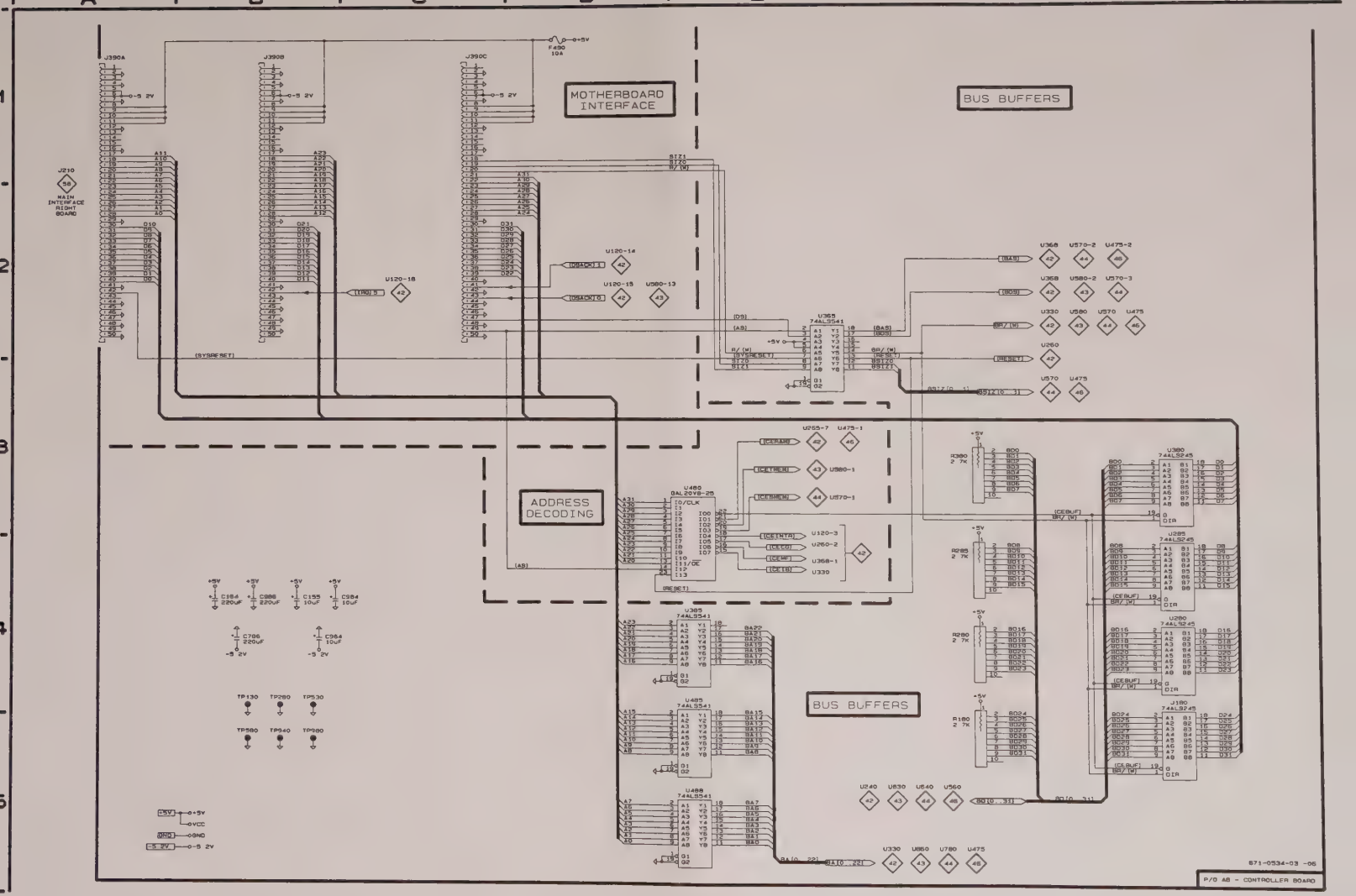
MOTHERBOARD INTERFACE
BUS BUFFERS
ADDRESS DECODING
BUS BUFFERS
MAIN INTERFACE RIGHT BOARD
P/O A8 - CONTROLLER BOARD
671-0534-03 -06

## CONTROLLER BOARD
## Schematic <42> Look-Up Chart

The schematic diagram has an alpha-numeric grid to assist in locating parts within that diagram. The etched circuit boards follow a numbering sequence starting with the lowest number at the upper left corner, as pictured in this manual.

**ASSEMBLY A8.** *Partial Assembly A8 also shown on Schematics 41, 43, 44, 45, and 46.*

| CIRCUIT NUMBER | SCHEM LOCATION |
|---|---|
| C254 | F3 |
| C256 | G3 |
| C258 | F3 |
| R146 | H2 |
| R148 | H2 |
| R160 | B1 |
| R165 | A1 |
| R240 | H3 |
| R340 | F3 |
| R350 | F3 |
| R352 | F3 |
| R840 | E3 |
| R850 | E3 |
| R960 * | F2 |
| U120 | E5 |
| U125A | F4 |
| U125B | E4 |
| U135B | F4 |
| U140 | G4 |
| U145 | D5 |
| U150A | D1 |
| U150B | D1 |
| U160 | B1 |
| U170 | C1 |
| U175 | B4 |
| U240 | G2 |
| U250A | F3 |
| U250B | F4 |
| U250C | B1 |
| U250D | F2 |
| U260 | F2 |
| U265 | C2 |
| U270 | B4 |
| U330 | B5 |
| U340 | C3 |
| U350 | G3 |
| U368 | B3 |
| U852 | D3 |
| U960B | F2 |
| U963 * | |
| U980A | G4 |
| U980B | H1 |
| Y250 | B2 |

*See parts list for earlier serial number ranges.

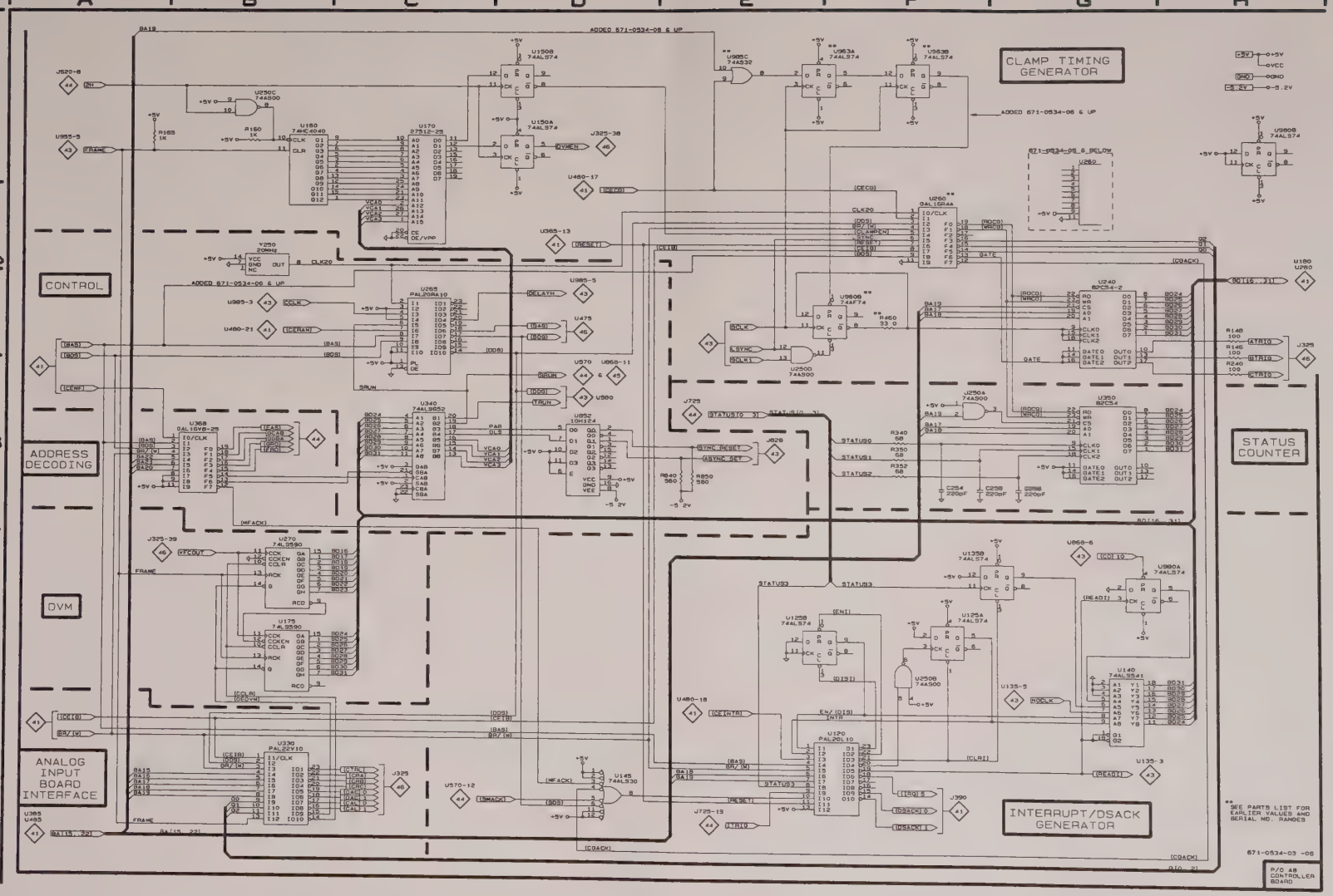
CLAMP TIMING GENERATOR
CONTROL
ADDRESS DECODING
DVM
ANALOG INPUT BOARD INTERFACE
STATUS COUNTER
INTERRUPT/DSACK GENERATOR
ADDED 671-0534-06 & UP
671-0534-06 & BELOW
SEE PARTS LIST FOR EARLIER VALUES AND SERIAL NO. RANGES
671-0534-03 -06
P/O A8 CONTROLLER BOARD

## CONTROLLER BOARD
## Schematic <43> Look-Up Chart

The schematic diagram has an alpha-numeric grid to assist in locating parts within that diagram. The etched circuit boards follow a numbering sequence starting with the lowest number at the upper left corner, as pictured in this manual.

**ASSEMBLY A8.** *Partial Assembly A8 also shown on Schematics 41, 42, 44, 45, and 46.*

| CIRCUIT NUMBER | SCHEM LOCATION | CIRCUIT NUMBER | SCHEM LOCATION |
|---|---|---|---|
| C942 | C3 | U830C | A5 |
| | | U830D | A5 |
| J828 | A2 | U835A | B1 |
| | | U835B | B1 |
| R582 | G3 | U835C | B1 |
| R620 | G3 | | |
| R820 | C3 | U835D | B1 |
| R830 | B3 | U860 | F3 |
| R835A | B1 | U865 | F1 |
| | | U868A | H4 |
| R835B | B1 | U868B | G5 |
| R835C | B1 | | |
| R835D | B1 | U868C | G2 |
| R860B | G2 | U868D | G5 |
| R860C | G2 | U880 | G3 |
| | | U885 | F2 |
| R860D | G2 | U888 | F4 |
| R860E | G2 | | |
| R865B | G2 | U930A | B2 |
| R865C | G2 | U930B | B2 |
| R865D | G2 | U930C | B2 |
| | | U930D | B2 |
| R865E | G2 | U935A | C4 |
| R885A | G3 | | |
| R885B | G3 | U935B | C4 |
| R885C | G3 | U935C | C3 |
| R885D | G3 | U935D | C4 |
| | | U950 | C3 |
| R885E | G3 | U955A | C5 |
| R930A | B2 | | |
| R930B | B2 | U955B | C4 |
| R930C | B2 | U955D | D3 |
| R930D | B2 | U960A | G5 |
| | | U965 | G4 |
| R935A | B4 | U985A | H4 |
| R935B | B4 | | |
| R935C | B4 | U985B | H4 |
| R950 | D3 | U985C | A4 |
| R952 | D3 | U985D | A4 |
| R954 | C3 | W920 | C4 |
| R956 | B5 | W925 | C4 |
| R958 | B4 | | |
| U135A | D3 | | |
| U580 | F5 | | |
| U630 | G3 | | |
| U730 | G1 | | |
| U735 | G1 | | |
| U830A | C3 | | |
| U830B | A4 | | |

*See parts list for earlier serial number ranges.

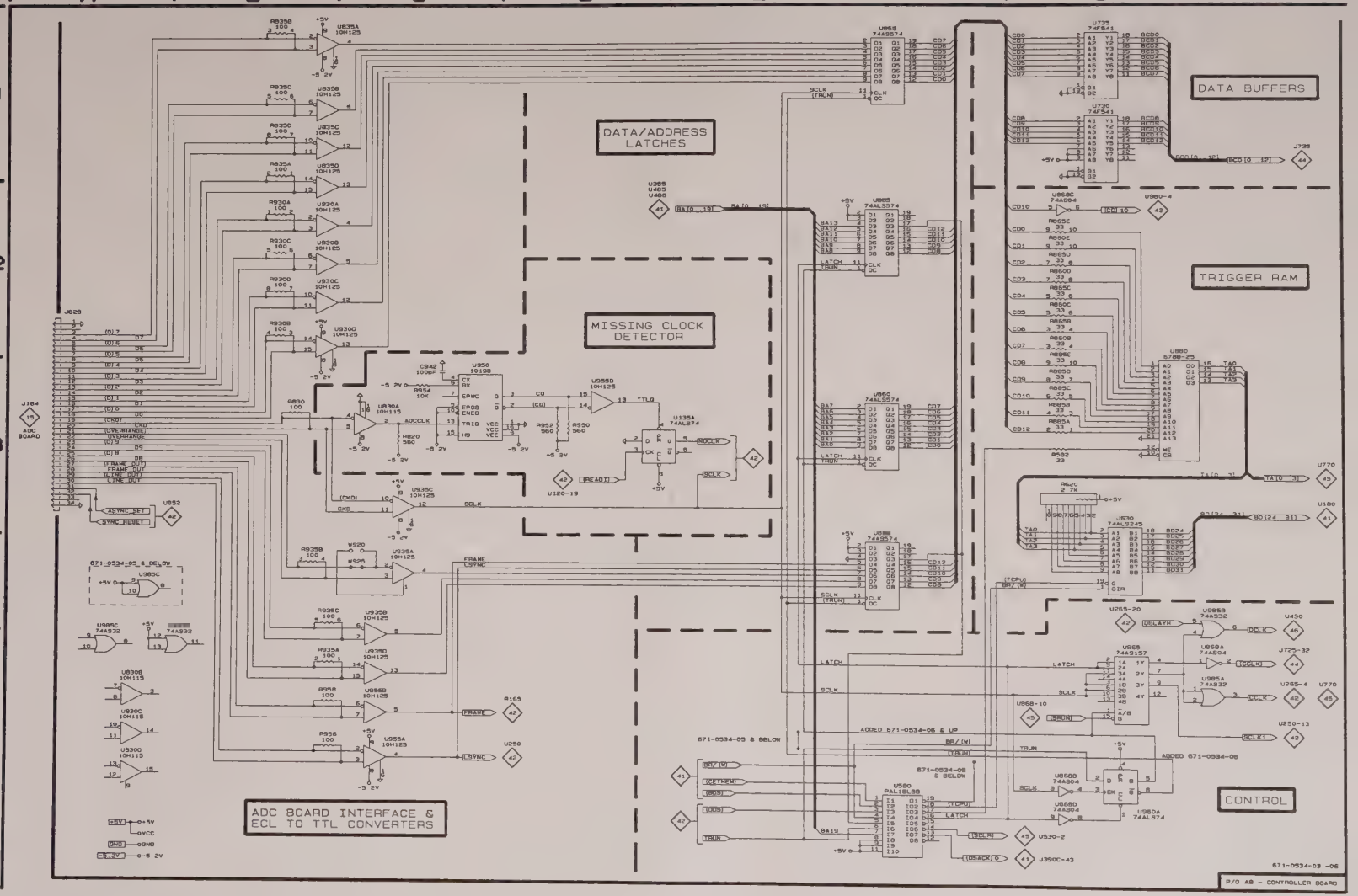
DATA/ADDRESS LATCHES
MISSING CLOCK DETECTOR
ADC BOARD INTERFACE & ECL TO TTL CONVERTERS
DATA BUFFERS
TRIGGER RAM
CONTROL
671-0534-03 -06
P/O A8 - CONTROLLER BOARD

## CONTROLLER BOARD
## Schematic <44> Look-Up Chart

The schematic diagram has an alpha-numeric grid to assist in locating parts within that diagram. The etched circuit boards follow a numbering sequence starting with the lowest number at the upper left corner, as pictured in this manual.

**ASSEMBLY A8.** *Partial Assembly A8 also shown on Schematics 41, 42, 43, 45, and 46.*

| CIRCUIT NUMBER | SCHEM LOCATION |
|---|---|
| J221 | H4 |
| J620 | H2 |
| J725 | H1 |
| R230 | F3 |
| R435 | F5 |
| R570 | C4 |
| R630 | B2 |
| R640 | B2 |
| R650 | B1 |
| R652 | B1 |
| U230 | E3 |
| U435 | E5 |
| U570 | B4 |
| U640 | C2 |
| U650 | C2 |
| U652 | C1 |
| U660 | C1 |
| U780 | B5 |
| U785 | B4 |

*See parts list for earlier serial number ranges.

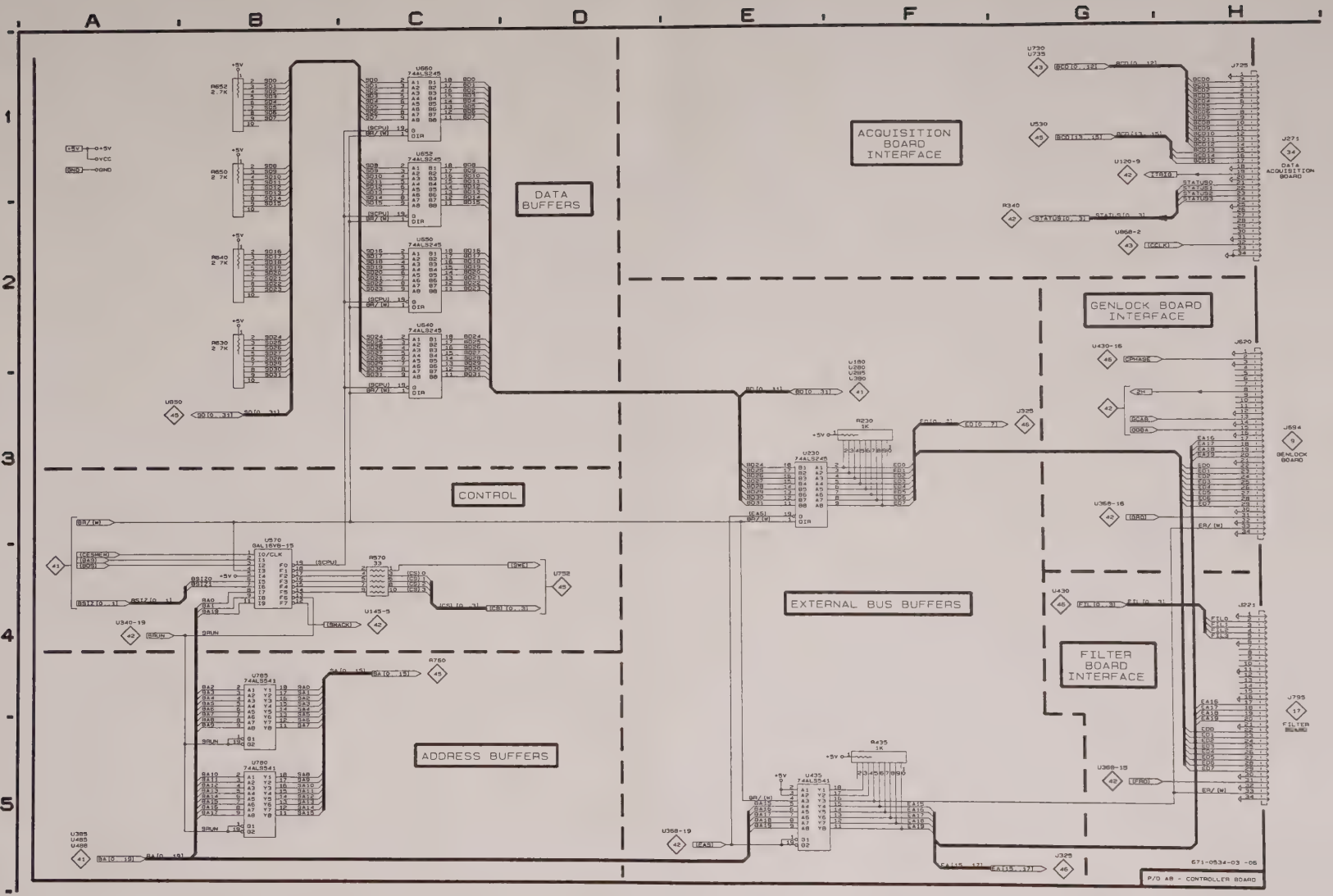
A
B
C
D
E
F
G
H
1
2
3
4
5
DATA BUFFERS
ACQUISITION BOARD INTERFACE
GENLOCK BOARD INTERFACE
CONTROL
EXTERNAL BUS BUFFERS
FILTER BOARD INTERFACE
ADDRESS BUFFERS
671-0534-03 -06
P/O A8 - CONTROLLER BOARD

## CONTROLLER BOARD
## Schematic <45> Look-Up Chart

The schematic diagram has an alpha-numeric grid to assist in locating parts within that diagram. The etched circuit boards follow a numbering sequence starting with the lowest number at the upper left corner, as pictured in this manual.

**ASSEMBLY A8.** *Partial Assembly A8 also shown on Schematics 41, 42, 43, 44, and 46.*

| CIRCUIT NUMBER | SCHEM LOCATION |
|---|---|
| R760A | B2 |
| R760B | B3 |
| R760C | B3 |
| R760D | B2 |
| R760E | B2 |
| R765A | B1 |
| R765B | B2 |
| R765C | B2 |
| R765D | B2 |
| R770A | B2 |
| R770B | B3 |
| R770C | B3 |
| R775A | B1 |
| R775B | B2 |
| R775C | B2 |
| R775D | B2 |
| U530 | G5 |
| U670 | G3 |
| U680 | G4 |
| U740 | E4 |
| U745 | E3 |
| U750 | E2 |
| U752 | D4 |
| U755 | E2 |
| U758 | D3 |
| U760 | D2 |
| U765 | D2 |
| U770 | B4 |
| U775 | B3 |
| U840 | G2 |
| U850 | G2 |
| U868E | B4 |
| U868F | G3 |

*See parts list for earlier serial number ranges.

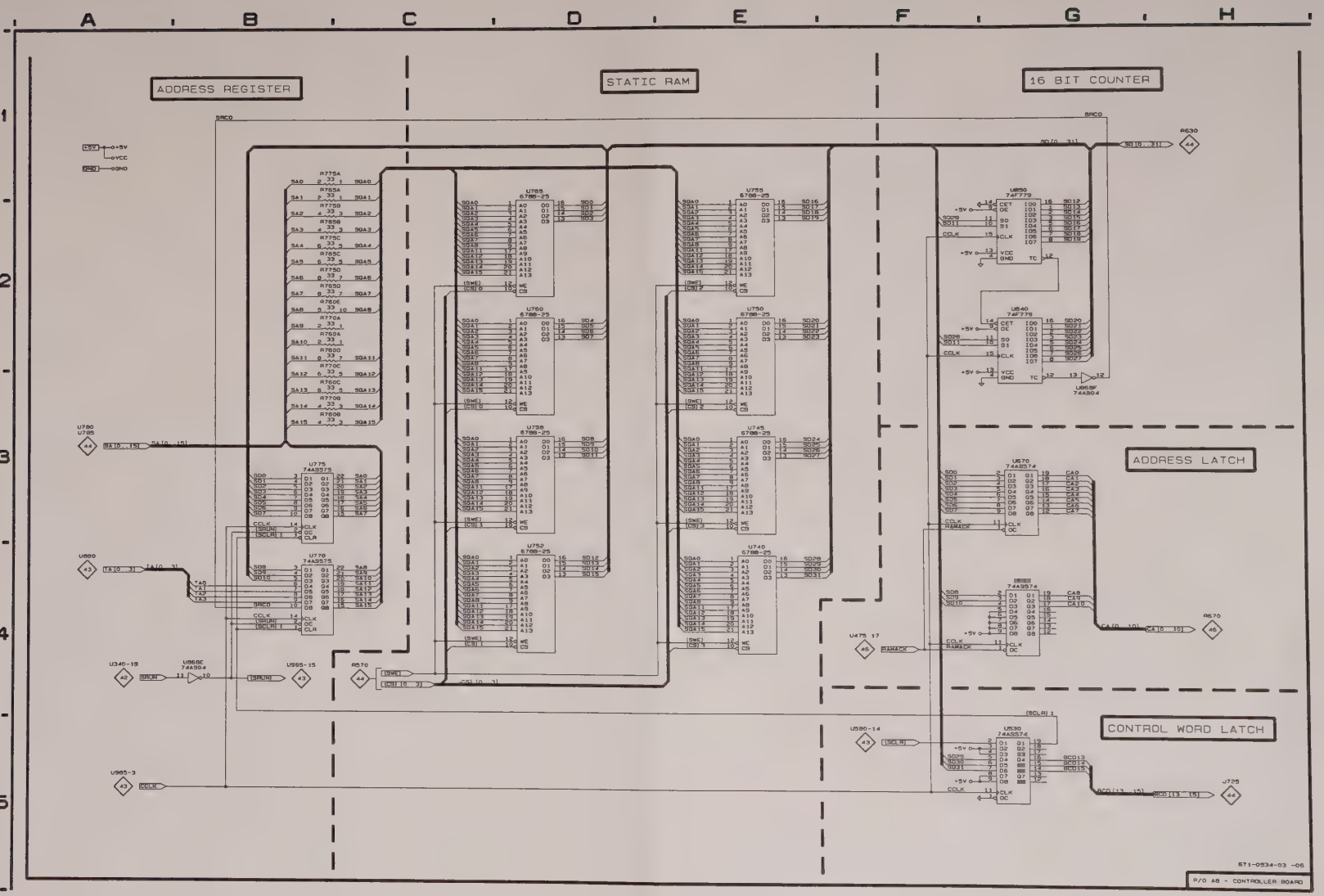
ADDRESS REGISTER
STATIC RAM
16 BIT COUNTER
ADDRESS LATCH
CONTROL WORD LATCH
671-0534-03 -06
P/O A8 - CONTROLLER BOARD

## CONTROLLER BOARD
## Schematic <45> Look-Up Chart

The schematic diagram has an alpha-numeric grid to assist in locating parts within that diagram. The etched circuit boards follow a numbering sequence starting with the lowest number at the upper left corner, as pictured in this manual.

**ASSEMBLY A8.** *Partial Assembly A8 also shown on Schematics 41, 42, 43, 44, and 45.*

| CIRCUIT NUMBER | SCHEM LOCATION | CIRCUIT NUMBER | SCHEM LOCATION | CIRCUIT NUMBER | SCHEM LOCATION |
|---|---|---|---|---|---|
| C110 | A5 | C630 | E5 | J325 | H1 |
| C115 | A5 | C640 | E5 | | |
| C140 | A5 | C650 | E5 | R530 | E3 |
| C145 | A5 | C652 | F5 | R540 | E2 |
| C150 | B5 | C660 | F5 | R550 | E2 |
| | | | | R552 | E1 |
| C152 | B5 | C670 | F5 | R580 | B2 |
| C154 | B5 | C680 | F5 | | |
| C166 | B5 | C688 | F5 | R670A | B1 |
| C170 | C5 | C730 | G5 | R670B | B2 |
| C180 | C5 | C735 | G5 | R670C | B1 |
| | | | | R670D | B1 |
| C230 | C5 | C740 | G5 | R670E | B2 |
| C235 | C5 | C745 | A5 | | |
| C240 | C5 | C750 | A5 | R675A | B1 |
| C250 | D5 | C752 | A5 | R675B | B2 |
| C259 | D5 | C755 | A5 | R675C | B1 |
| | | | | R675D | B1 |
| C260 | D5 | C758 | B5 | R675E | B2 |
| C262 | D5 | C760 | B5 | | |
| C280 | E5 | C765 | B5 | U430 | F3 |
| C285 | E5 | C770 | B5 | U440 | F2 |
| C330 | E5 | C775 | C5 | U445 | C3 |
| | | | | U450 | F3 |
| C340 | E5 | C780 | C5 | U452 | F1 |
| C356 | F5 | C785 | C5 | | |
| C360 | F5 | C788 | C5 | U455 | C3 |
| C364 | F5 | C789 | H5 | U458 | C2 |
| C380 | F5 | C830 | C5 | U460 | F1 |
| | | | | U465 | C1 |
| C385 | F5 | C840 | H5 | U475 | B4 |
| C430 | G5 | C842 | D5 | | |
| C440 | G5 | C844 | H5 | U540 | E3 |
| C450 | G5 | C846 | D5 | U550 | E2 |
| C452 | A5 | C850 | D5 | U552 | E2 |
| | | | | U560 | E1 |
| C460 | A5 | C855 | H5 | U688 | B2 |
| C470 | A5 | C860 | D5 | U788 | B3 |
| C530 | A5 | C864 | E5 | | |
| C535 | B5 | C868 | E5 | | |
| C540 | B5 | C870 | E5 | | |
| | | | | | |
| C542 | B5 | C885 | E5 | | |
| C550 | B5 | C888 | F5 | | |
| C552 | C5 | C940 | H5 | | |
| C554 | C5 | C944 | H5 | | |
| C556 | C5 | C946 | F5 | | |
| | | | | | |
| C560 | C5 | C955 | H5 | | |
| C562 | C5 | C958 | H5 | | |
| C570 | D5 | C960 | F5 | | |
| C572 | D5 | C965 | F5 | | |
| C580 | D5 | C980 | F5 | | |
| | | | | | |
| C582 | D5 | C982 | G5 | | |
| C586 | E5 | C985 | G5 | | |

*See parts list for earlier serial number ranges.

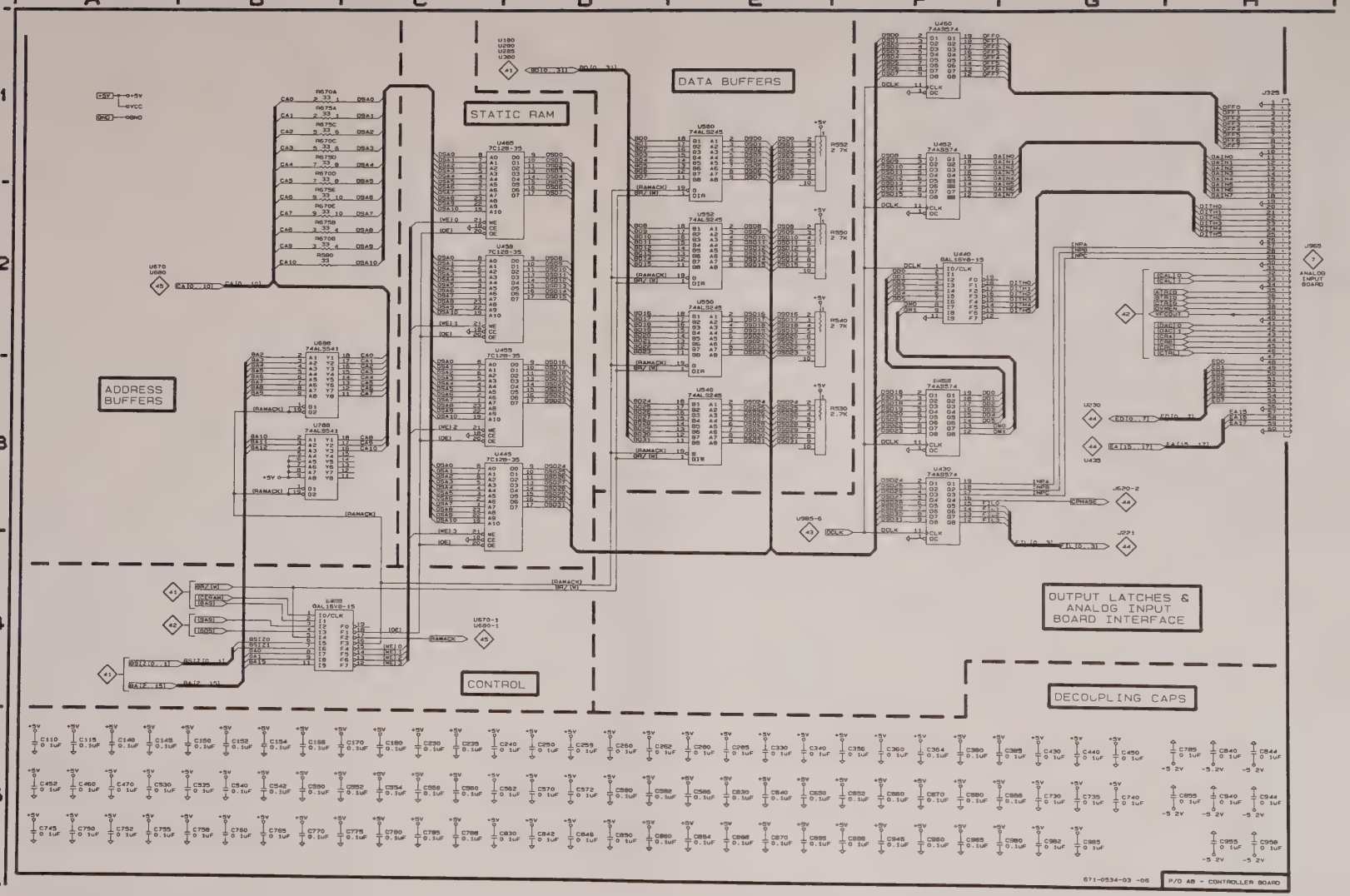

STATIC RAM
DATA BUFFERS
ADDRESS BUFFERS
CONTROL
OUTPUT LATCHES & ANALOG INPUT BOARD INTERFACE
DECOUPLING CAPS
ANALOG INPUT BOARD
671-0534-03 -05
P/O A8 - CONTROLLER BOARD

N INTERCONNECT

A9 DISPLAY MEMORY II

A10A1 FRONT PANEL

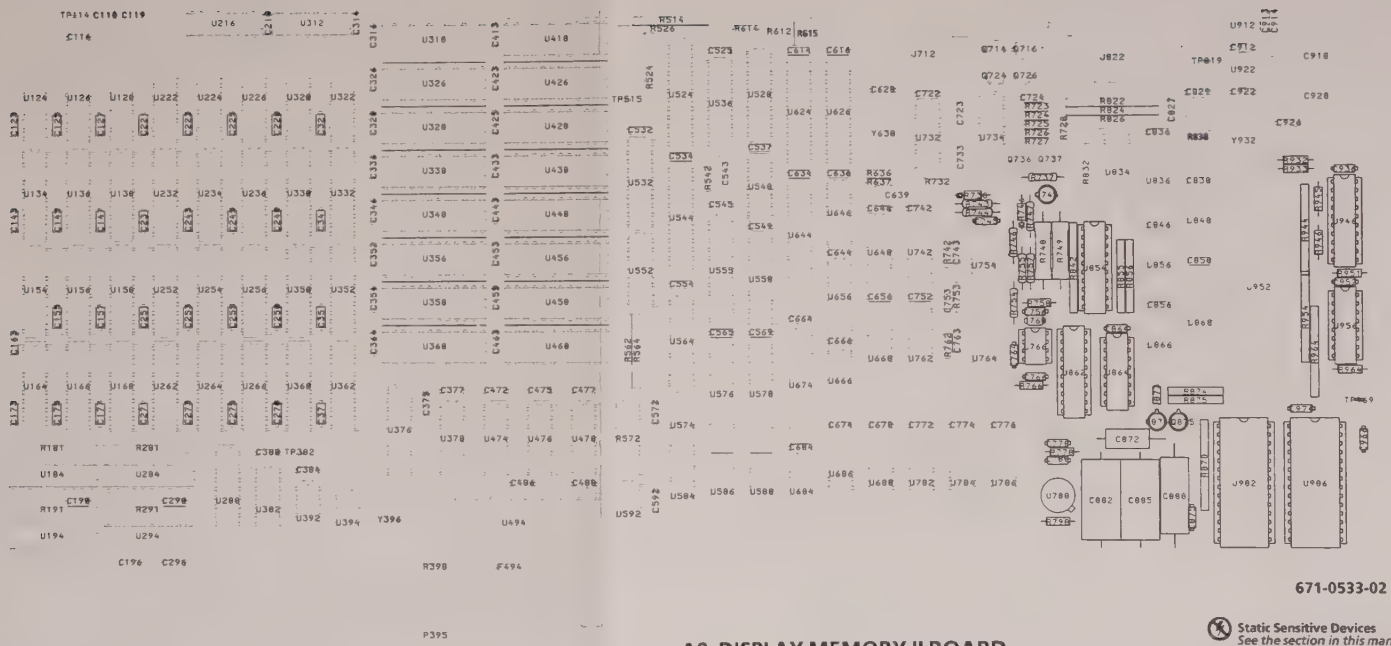

671-0533-02

Static Sensitive Devices
*See the section in this manual on handling precautions for static sensitive components.*

## A9 DISPLAY MEMORY II BOARD

### DISPLAY MEMORY BOARD Schematic <47> Look-Up Chart

The schematic diagram has an alpha-numeric grid to assist in locating parts within that diagram. The etched circuit boards follow a numbering sequence starting with the lowest number at the upper left corner, as pictured in this manual.

**ASSEMBLY A9.** *Partial Assembly A9 also shown on Schematics 48, 49, 50, 51, 52, 53, and 54.*

*See parts list for earlier serial number ranges.

| CIRCUIT NUMBER | SCHEM LOCATION | CIRCUIT NUMBER | SCHEM LOCATION |
|---|---|---|---|
| C116 | H1 | R191 | F3 |
| C118 | H1 | R281 | F5 |
| C119 | G1 | R291 | F4 |
| C778 | H1 | | |
| C788 | G1 | TP114 | G2 |
| C872 | H1 | TP382 | G2 |
| C875 | H1 | TP515 | H2 |
| C882 | G1 | TP819 | H2 |
| C885 | G1 | TP969 | H2 |
| C888 | G1 | | |
| | | U184 | G4 |
| F494 | E1 | U194 | G3 |
| | | U284 | G5 |
| P395A | A1 | U288 | B3 |
| P395B | C1 | U294 | G4 |
| P395C | D1 | U382 | B4 |
| | | U564A | F2 |
| R181 | F4 | U788 | H1 |

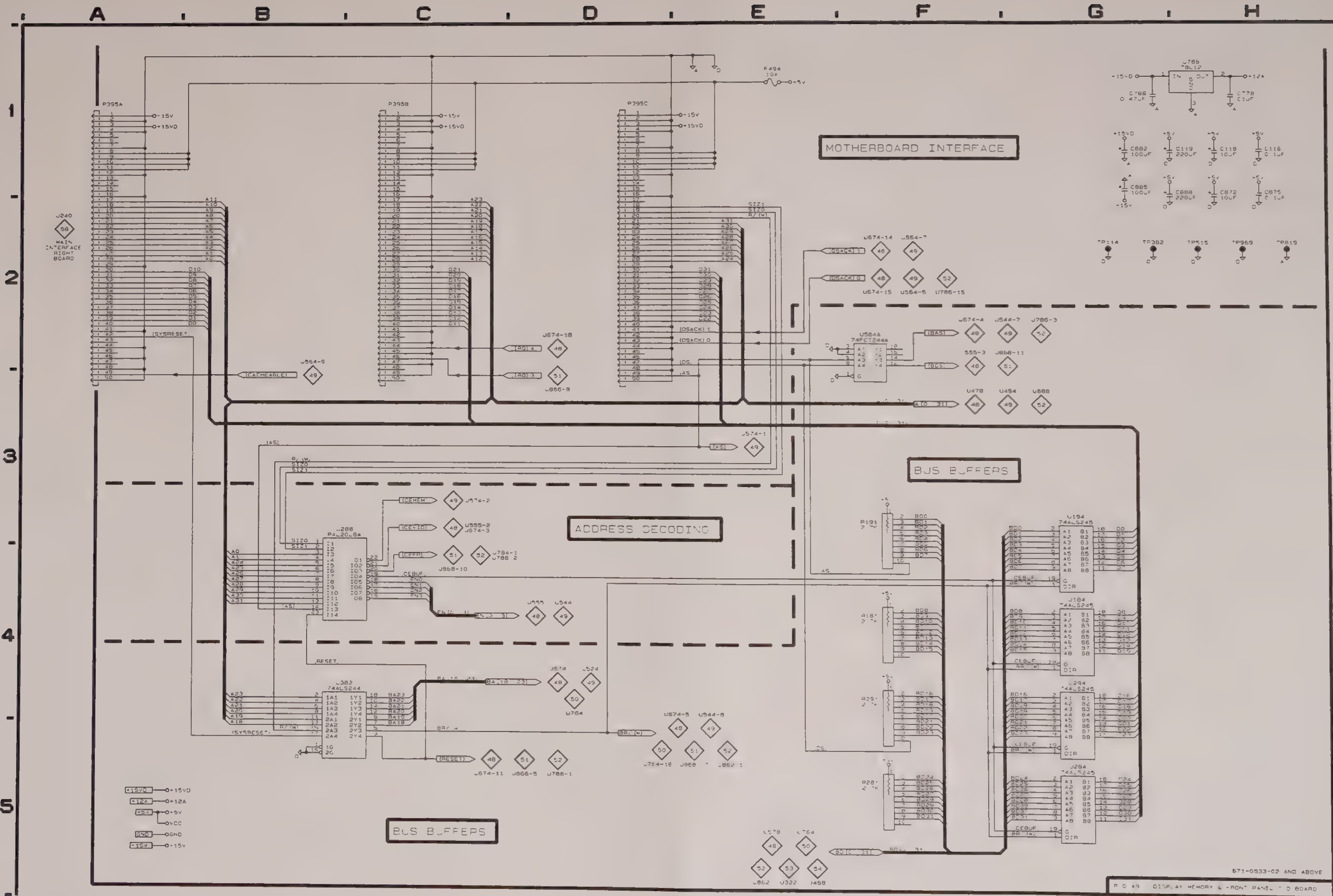
MOTHERBOARD INTERFACE
BUS BUFFERS
ADDRESS DECODING
BUS BUFFERS
P395A
P395B
P395C
U288
PAL20L8A
U382
74ALS244
U194
74ALS245
U184
74ALS245
U294
74ALS245
U284
74ALS245
U564A
74FCT244A
671-0533-02 AND ABOVE
P/O A9 DISPLAY MEMORY & FRONT PANEL I/O BOARD

## DISPLAY MEMORY BOARD
## Schematic <48> Look-Up Chart

The schematic diagram has an alpha-numeric grid to assist in locating parts within that diagram. The etched circuit boards follow a numbering sequence starting with the lowest number at the upper left corner, as pictured in this manual.

**ASSEMBLY A9.** *Partial Assembly A9 also shown on Schematics 47, 49, 50, 51, 52, 53, and 54.*

| CIRCUIT NUMBER | SCHEM LOCATION |
|---|---|
| R572 | G1 |
| U376 | F4 |
| U378 | F3 |
| U474 | F2 |
| U476 | F2 |
| U478 | F1 |
| U548A | B2 |
| U548B | B2 |
| U555 | B3 |
| U558 | D4 |
| U576 | D2 |
| U578 | D1 |
| U586 | E2 |
| U588 | E2 |
| U646C | C4 |
| U646E | F4 |
| U674 | C5 |
| U684 | E1 |
| U686A | C4 |
| U686B | C4 |

*See parts list for earlier serial number ranges.

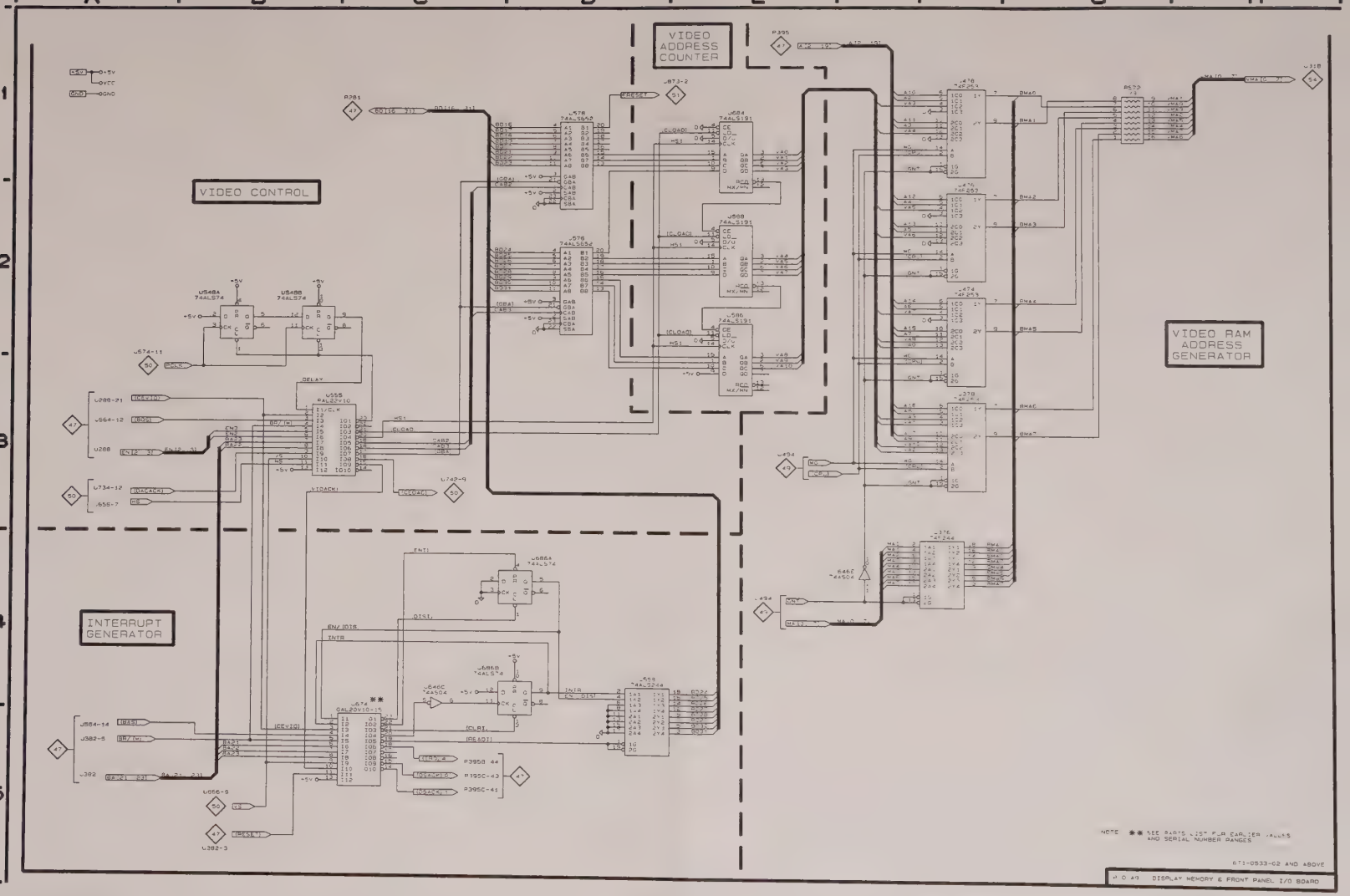
VIDEO ADDRESS COUNTER
VIDEO CONTROL
VIDEO RAM ADDRESS GENERATOR
INTERRUPT GENERATOR
NOTE ** SEE PARTS LIST FOR EARLIER VALUES AND SERIAL NUMBER RANGES
871-0533-02 AND ABOVE
M 0 49 DISPLAY MEMORY & FRONT PANEL I/O BOARD

## DISPLAY MEMORY BOARD
## Schematic <49> Look-Up Chart

The schematic diagram has an alpha-numeric grid to assist in locating parts within that diagram. The etched circuit boards follow a numbering sequence starting with the lowest number at the upper left corner, as pictured in this manual.

**ASSEMBLY A9.** *Partial Assembly A9 also shown on Schematics 47, 48, 50, 51, 52, 53, and 54.*

| CIRCUIT NUMBER | SCHEM LOCATION |
|---|---|
| C543 | E3 |
| R398A | B5 |
| R398B | E4 |
| R398C | B4 |
| R398D | B4 |
| R514 | F1 |
| R524 | G2 |
| R526 | G2 |
| R542 | F3 |
| R562 | G3 |
| R564 | G2 |
| U392 | B4 |
| U394A | C4 |
| U394B | C4 |
| U494 | C3 |
| U524 | F2 |
| U532 | F2 |
| U544 | F2 |
| U552A | C2 |
| U552B | D2 |
| U564B | G4 |
| U574A | B4 |
| U574B | D4 |
| U574C | A5 |
| U584A | E4 |
| U584B | F4 |
| U592A | D4 |
| U592B | F4 |
| U646A | G4 |
| U646B | C3 |
| Y396 | A5 |

*See parts list for earlier serial number ranges.

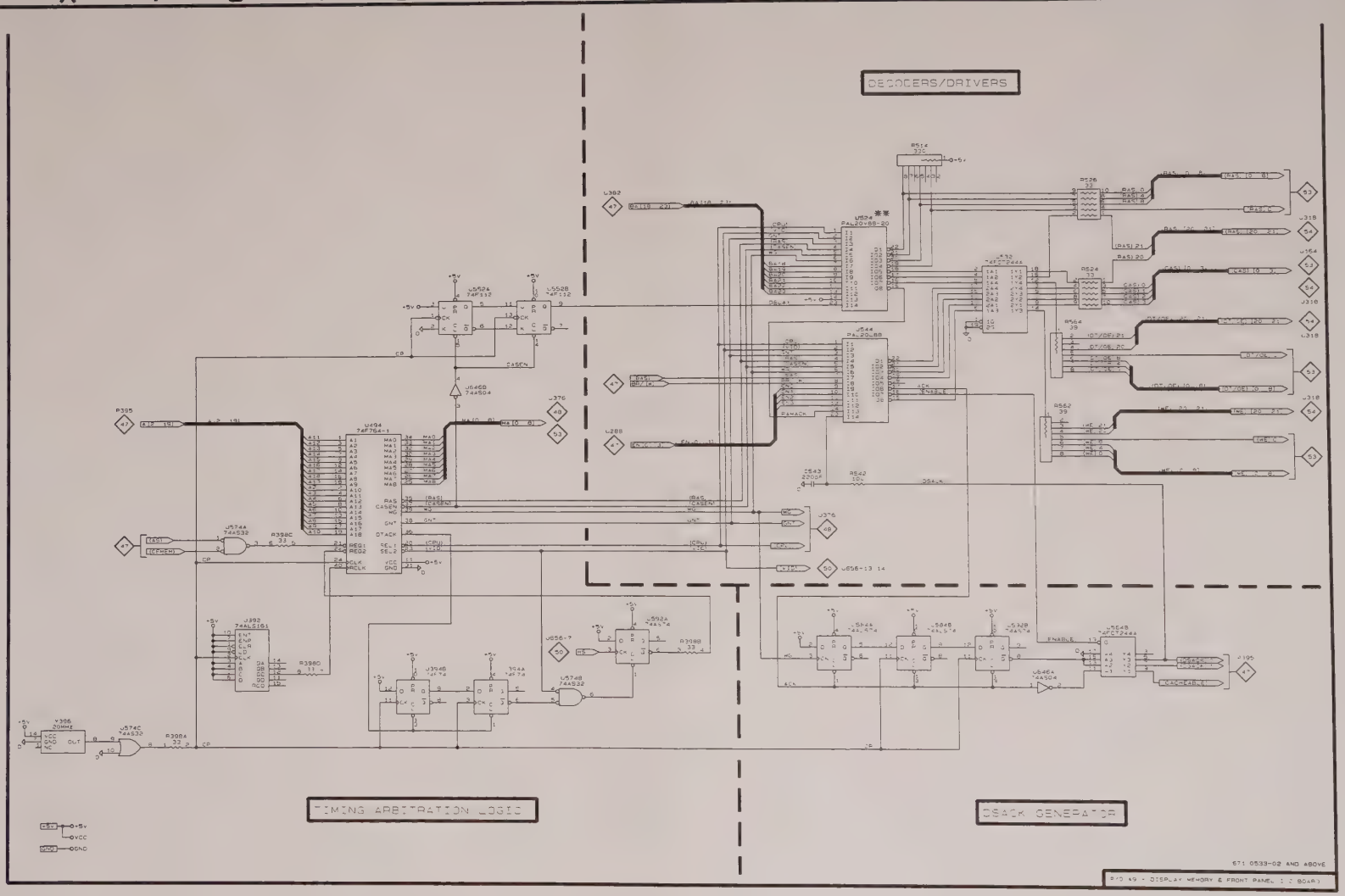
DECODERS/DRIVERS
TIMING ARBITRATION LOGIC
DSACK GENERATOR
671 0539-02 AND ABOVE
P/O 49 - DISPLAY MEMORY & FRONT PANEL ( 2 BOARD)

## DISPLAY MEMORY BOARD
## Schematic <50> Look-Up Chart

The schematic diagram has an alpha-numeric grid to assist in locating parts within that diagram. The etched circuit boards follow a numbering sequence starting with the lowest number at the upper left corner, as pictured in this manual.

**ASSEMBLY A9.** *Partial Assembly A9 also shown on Schematics 47, 48, 49, 51, 52, 53, and 54.*

| CIRCUIT NUMBER | SCHEM LOCATION | CIRCUIT NUMBER | SCHEM LOCATION |
|---|---|---|---|
| C639 | G4 | R758 | D4 |
| C723 | G5 | R762 | D4 |
| C733 | F5 | R766 | D4 |
| C753 | D4 | R832 | F4 |
| C768 | D4 | | |
| | | U216 | D4 |
| CR738 | F3 | U312 | D5 |
| CR746 | F3 | U528 | C1 |
| | | U536 | C1 |
| J712 | H4 | U574D | A1 |
| | | | |
| Q714 | G4 | U624 | A3 |
| Q716 | G4 | U626 | A2 |
| Q724 | G4 | U644 | A3 |
| Q726 | F4 | U646D | F2 |
| Q736 | H4 | U646F | B2 |
| | | | |
| Q737 | F3 | U648 | E2 |
| Q745 | F3 | U656A | A1 |
| | | U656B | C1 |
| R612 | G4 | U666A | E1 |
| R614 | H4 | U666B | G2 |
| R615 | F5 | | |
| R636 | E2 | U668 | F1 |
| R637 | B1 | U732A | F5 |
| | | U732B | F5 |
| R723 | G4 | U734 | E4 |
| R724 | F4 | U742A | G5 |
| R725 | G4 | | |
| R726 | G4 | U742B | D4 |
| R727 | H4 | U754A | F3 |
| | | U754B | F3 |
| R728A | G4 | U754C | E3 |
| R728B | F4 | U754D | E3 |
| R728C | G3 | | |
| R728D | G3 | U762 | F1 |
| R728E | H4 | U764 | C3 |
| | | U766 | D4 |
| R728F | H3 | | |
| R728G | H3 | Y638 | A1 |
| R732 | G5 | | |
| R737 | G4 | | |
| R742 | F3 | | |
| | | | |
| R743 | F3 | | |
| R744 | F3 | | |
| R746 | F3 | | |
| R747 | H4 | | |
| R748 | F3 | | |
| | | | |
| R749 | F3 | | |
| R753 | E3 | | |
| R754 | E3 | | |
| R755 | F4 | | |
| R757 | F3 | | |

*See parts list for earlier serial number ranges.

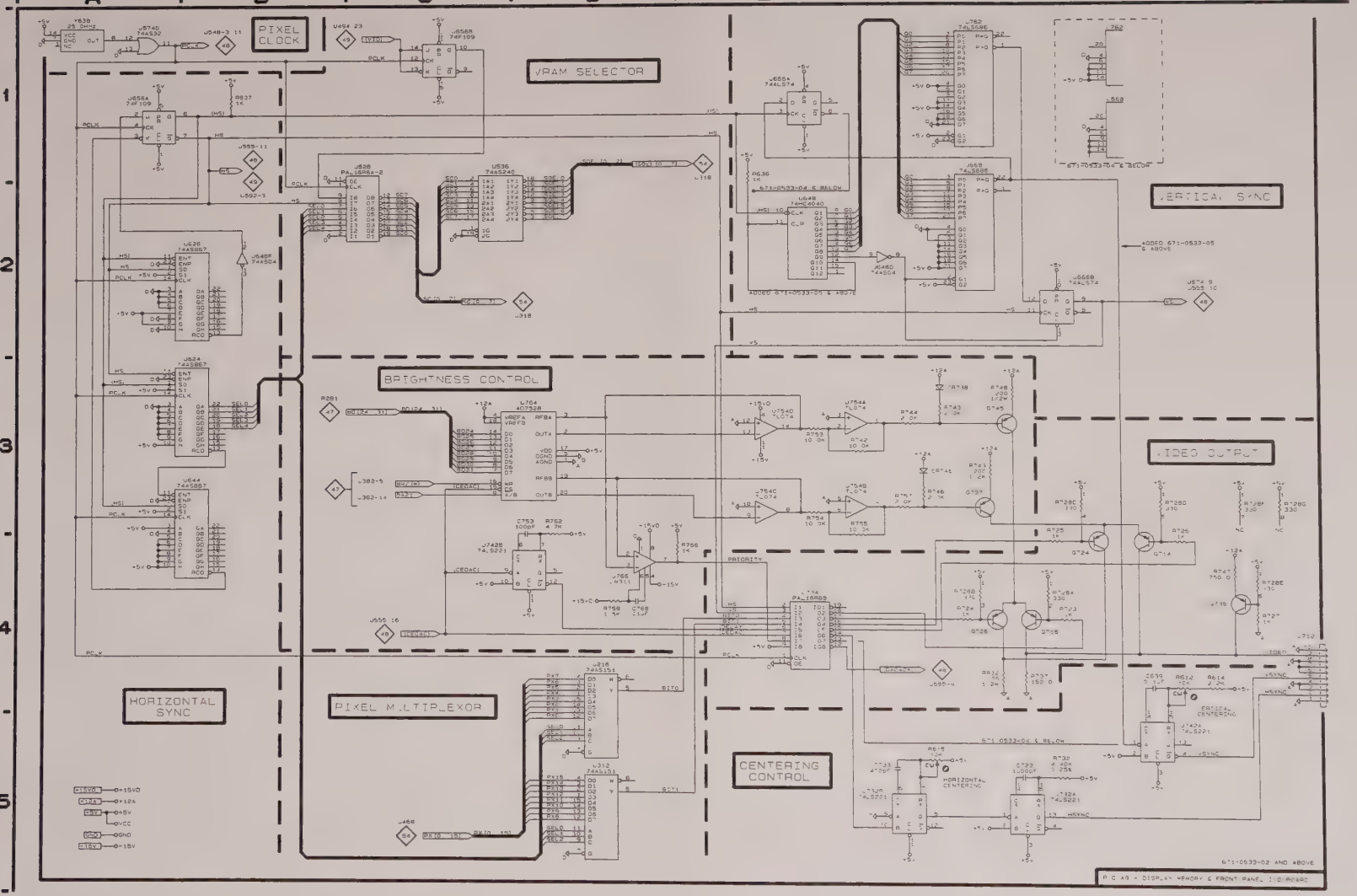
PIXEL CLOCK
VRAM SELECTOR
VERTICAL SYNC
BRIGHTNESS CONTROL
VIDEO OUTPUT
HORIZONTAL SYNC
PIXEL MULTIPLEXOR
CENTERING CONTROL
PRIORITY
HORIZONTAL CENTERING
VERTICAL CENTERING
A B C D E F G H
1 2 3 4 5

## DISPLAY MEMORY BOARD
## Schematic <51> Look-Up Chart

The schematic diagram has an alpha-numeric grid to assist in locating parts within that diagram. The etched circuit boards follow a numbering sequence starting with the lowest number at the upper left corner, as pictured in this manual.

**ASSEMBLY A9.** *Partial Assembly A9 also shown on Schematics 47, 48, 49, 50, 52, 53, and 54.*

| CIRCUIT NUMBER | SCHEM LOCATION | CIRCUIT NUMBER | SCHEM LOCATION |
|---|---|---|---|
| J873 | A3 | R944E | D1 |
| | | R944F | D2 |
| Q874 | B3 | R944G | D2 |
| Q875 | B3 | R944H | D2 |
| R822A | F5 | R944I | D2 |
| R822B | F5 | R945 | F2 |
| R822C | F5 | R946 | C4 |
| R822D | F4 | R951 | B3 |
| R822E | F4 | R954 | D2 |
| R824A | F5 | R964 | C4 |
| R824B | F5 | R965 | C4 |
| R824C | F4 | | |
| | | U834 | E5 |
| R824D | F4 | U838 | E2 |
| R824E | F4 | U848A | F2 |
| R826A | F5 | U848B | H1 |
| R826B | F5 | | |
| | | U854 | G4 |
| R826C | F4 | U856B | F3 |
| R826D | F4 | U866A | B3 |
| R826E | F4 | U866B | B3 |
| R842 | F4 | | |
| | | U866C | A3 |
| R855 | H4 | U866D | F3 |
| R856 | H4 | U868 | E3 |
| R874A | A2 | U946 | C3 |
| R874B | B3 | | |
| | | U952 | B2 |
| R874C | A3 | U982 | H4 |
| R875B | B4 | U986 | H2 |
| R875C | B3 | | |
| R875D | B3 | Y932 | A1 |
| R875E | A3 | | |
| R878 | C1 | | |
| R932 | B1 | | |
| R933 | B1 | | |
| R944A | C3 | | |
| R944B | C3 | | |
| R944C | C3 | | |
| R944D | C3 | | |

*See parts list for earlier serial number ranges.

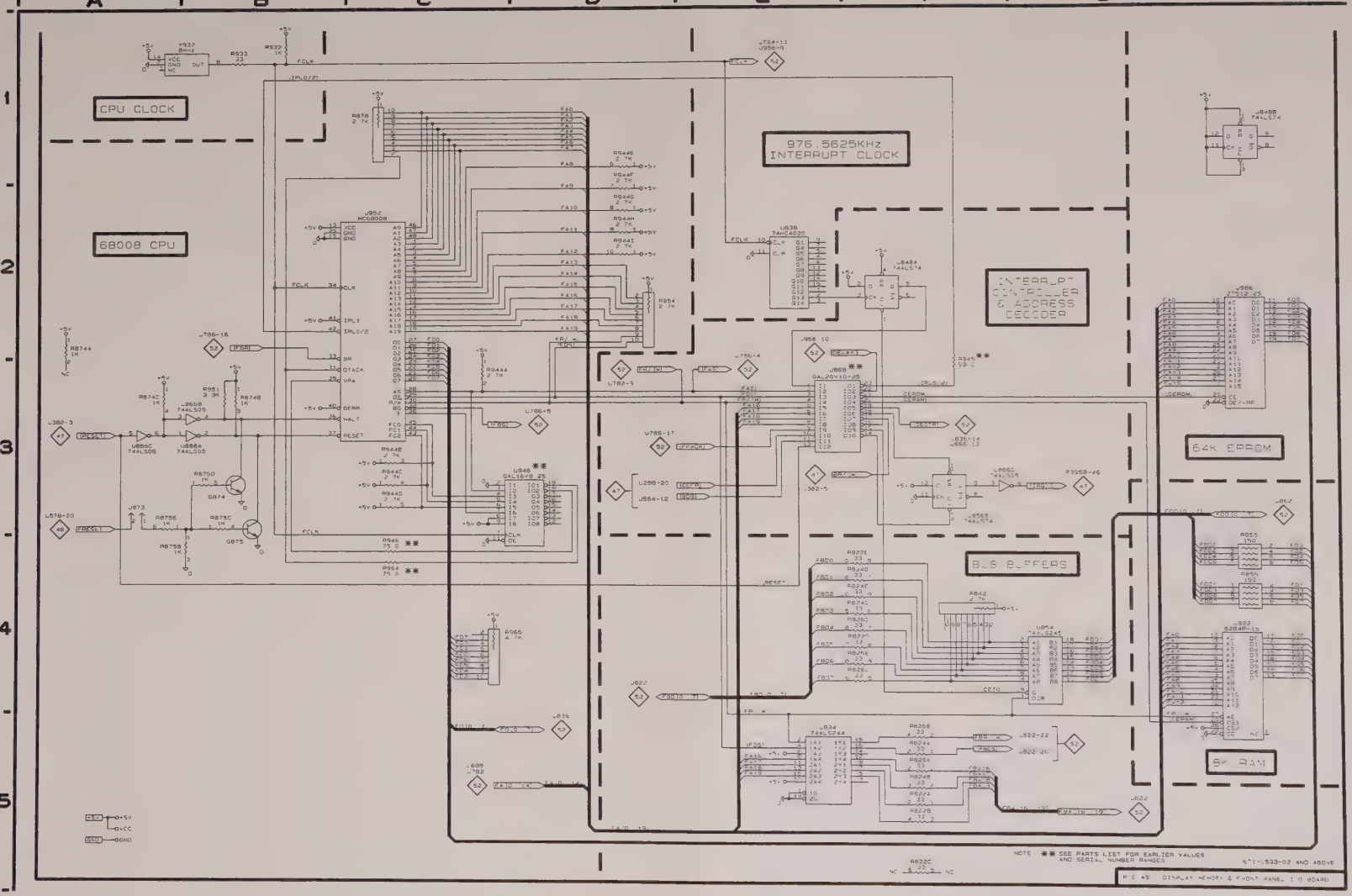
CPU CLOCK
68008 CPU
976.5625KHz INTERRUPT CLOCK
INTERRUPT CONTROLLER & ADDRESS DECODER
64K EPROM
BUS BUFFERS
8K RAM
NOTE ** SEE PARTS LIST FOR EARLIER VALUES AND SERIAL NUMBER RANGES
P.C. A9 DISPLAY MEMORY & FRONT PANEL I/O BOARD

## DISPLAY MEMORY BOARD
## Schematic <52> Look-Up Chart

The schematic diagram has an alpha-numeric grid to assist in locating parts within that diagram. The etched circuit boards follow a numbering sequence starting with the lowest number at the upper left corner, as pictured in this manual.

**ASSEMBLY A9.** *Partial Assembly A9 also shown on Schematics 47, 48, 49, 50, 51, 53, and 54.*

| CIRCUIT NUMBER | SCHEM LOCATION | CIRCUIT NUMBER | SCHEM LOCATION | CIRCUIT NUMBER | SCHEM LOCATION |
|---|---|---|---|---|---|
| C123 | A5 | C413 | E5 | C827 | E4 |
| C125 | B5 | C423 | F5 | C829 | E4 |
| C127 | B5 | C425 | F5 | C836 | E4 |
| C143 | B5 | C433 | F5 | C838 | F4 |
| C145 | B5 | C443 | F5 | C846 | F4 |
| C147 | C5 | C453 | G5 | C856 | F4 |
| C155 | C5 | C455 | G5 | C858 | F4 |
| C157 | C5 | C463 | G5 | C864 | G4 |
| C163 | C5 | C472 | D4 | C912 | H1 |
| C173 | D5 | C475 | D4 | C913 | H2 |
| C175 | D5 | C477 | D4 | C914 | H1 |
| C177 | D5 | C486 | G5 | C918 | H1 |
| C190 | A4 | C488 | H5 | C922 | H2 |
| C196 | A4 | C525 | D4 | C926 | G4 |
| C218 | B4 | C532 | D4 | C928 | H1 |
| C221 | E5 | C534 | E4 | C936 | G4 |
| C223 | E5 | C537 | E4 | C952 | G4 |
| C225 | E5 | C545 | E4 | C966 | H4 |
| C228 | E5 | C549 | E4 | C974 | H4 |
| C231 | F5 | C554 | F4 | J822 | H2 |
| C243 | F5 | C565 | F4 | | |
| C245 | F5 | C569 | F4 | R778 | E3 |
| C248 | F5 | C572 | F4 | R798 | E3 |
| C251 | G5 | C592 | G4 | R874D | B3 |
| C253 | G5 | C614 | G4 | R874E | C3 |
| C255 | G5 | C616 | G4 | U688 | B1 |
| C258 | G5 | C628 | G4 | U782 | B1 |
| C271 | H5 | C634 | H4 | U784 | E2 |
| C273 | A5 | C636 | H4 | U786 | E3 |
| C275 | B5 | C644 | A4 | U836 | B3 |
| C278 | B5 | C646 | A4 | U856A | C3 |
| C290 | B4 | C656 | B4 | U862 | B2 |
| C296 | B4 | C664 | B4 | U864 | B3 |
| C314 | B4 | C666 | B4 | U866E | C3 |
| C316 | B5 | C674 | B4 | U866F | B3 |
| C321 | B5 | C678 | C4 | U912 | G1 |
| C326 | C5 | C684 | C4 | U922 | G1 |
| C328 | C5 | C722 | C4 | U956 | E1 |
| C336 | C5 | C724 | C4 | | |
| C341 | C5 | C742 | D4 | | |
| C346 | D5 | C743 | G2 | | |
| C351 | D5 | C745 | G2 | | |
| C352 | D5 | C752 | D4 | | |
| C354 | E5 | C756 | H2 | | |
| C364 | E5 | C763 | G1 | | |
| C371 | E5 | C764 | D4 | | |
| C375 | C4 | C766 | H2 | | |
| C377 | C4 | C772 | D4 | | |
| C380 | C4 | C774 | D4 | | |
| C384 | C4 | C776 | E4 | | |

*See parts list for earlier serial number ranges.

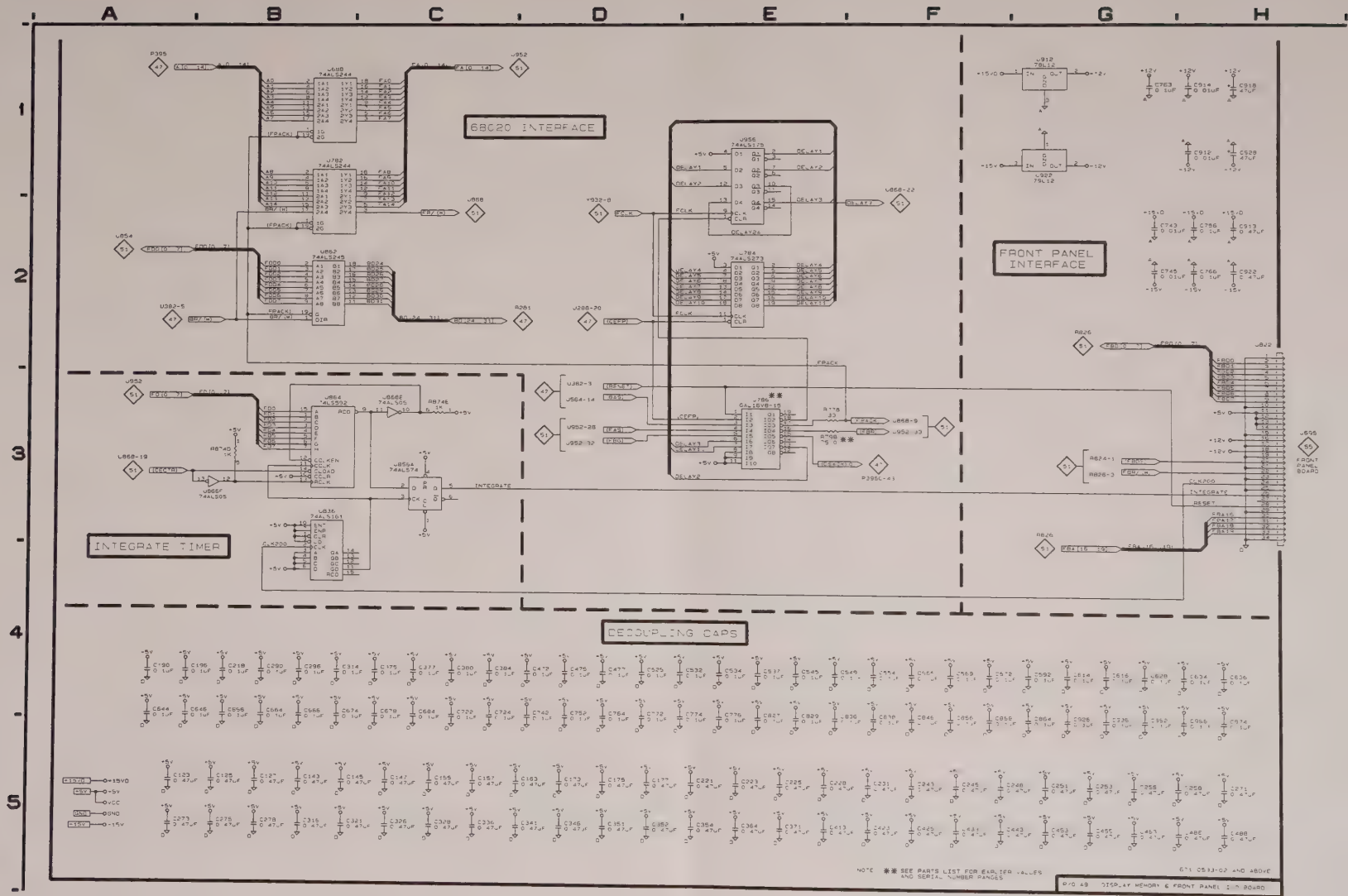

68C20 INTERFACE
FRONT PANEL INTERFACE
INTEGRATE TIMER
DECOUPLING CAPS
FRONT PANEL BOARD
NOTE ** SEE PARTS LIST FOR EARLIER VALUES AND SERIAL NUMBER RANGES
671 0533-02 AND ABOVE
P/O A9 DISPLAY MEMORY & FRONT PANEL I/O BOARD

## DISPLAY MEMORY BOARD
## Schematic <53> Look-Up Chart

The schematic diagram has an alpha-numeric grid to assist in locating parts within that diagram. The etched circuit boards follow a numbering sequence starting with the lowest number at the upper left corner, as pictured in this manual.

**ASSEMBLY A9.** *Partial Assembly A9 also shown on Schematics 47, 48, 49, 50, 51, 52, and 54.*

| CIRCUIT NUMBER | SCHEM LOCATION |
|---|---|
| U124 | B4 |
| U126 | B5 |
| U128 | D4 |
| U134 | B3 |
| U136 | B4 |
| U138 | D3 |
| U154 | B2 |
| U156 | B3 |
| U158 | D2 |
| U164 | B1 |
| U166 | B2 |
| U168 | D1 |
| U222 | D5 |
| U224 | E4 |
| U226 | E5 |
| U232 | D4 |
| U234 | E3 |
| U236 | E4 |
| U252 | D3 |
| U254 | E2 |
| U256 | E3 |
| U262 | D2 |
| U264 | E1 |
| U266 | E2 |
| U320 | G4 |
| U322 | G5 |
| U330 | G3 |
| U332 | G4 |
| U350 | G2 |
| U352 | G3 |
| U360 | G1 |
| U362 | G2 |

*See parts list for earlier serial number ranges.

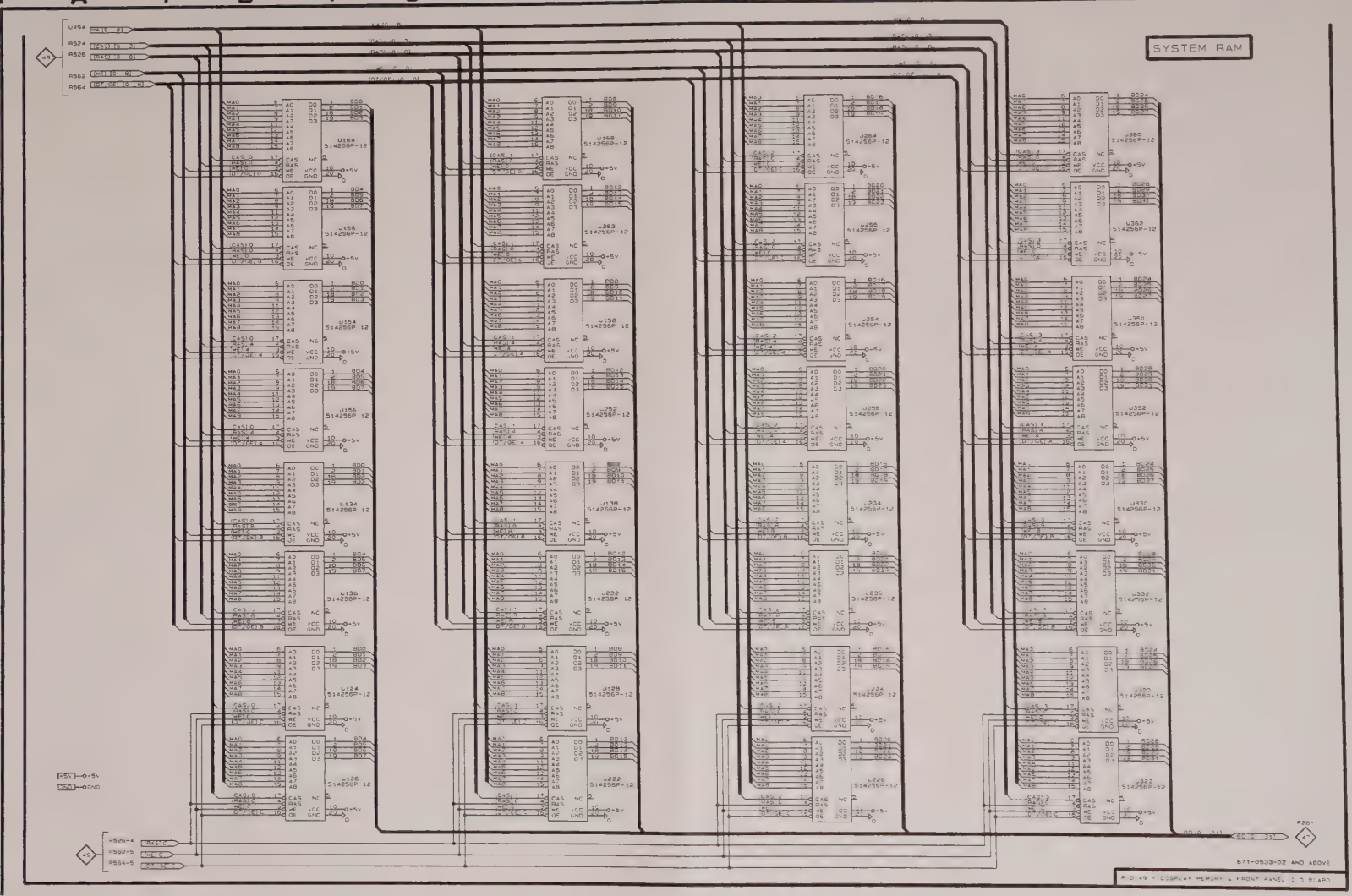
SYSTEM RAM
671-0533-02 AND ABOVE
4 MEG MEMORY

## DISPLAY MEMORY BOARD
## Schematic <54> Look-Up Chart

The schematic diagram has an alpha-numeric grid to assist in locating parts within that diagram. The etched circuit boards follow a numbering sequence starting with the lowest number at the upper left corner, as pictured in this manual.

**ASSEMBLY A9.** *Partial Assembly A9 also shown on Schematics 47, 48, 49, 50, 51, 52, and 53.*

| CIRCUIT NUMBER | SCHEM LOCATION |
|---|---|
| U318 | B2 |
| U326 | B2 |
| U328 | D2 |
| U338 | D2 |
| U348 | F2 |
| U356 | F2 |
| U358 | G2 |
| U368 | G2 |
| U418 | B4 |
| U426 | B4 |
| U428 | D4 |
| U438 | D4 |
| U448 | F4 |
| U456 | F4 |
| U458 | G4 |
| U468 | G4 |

*See parts list for earlier serial number ranges.

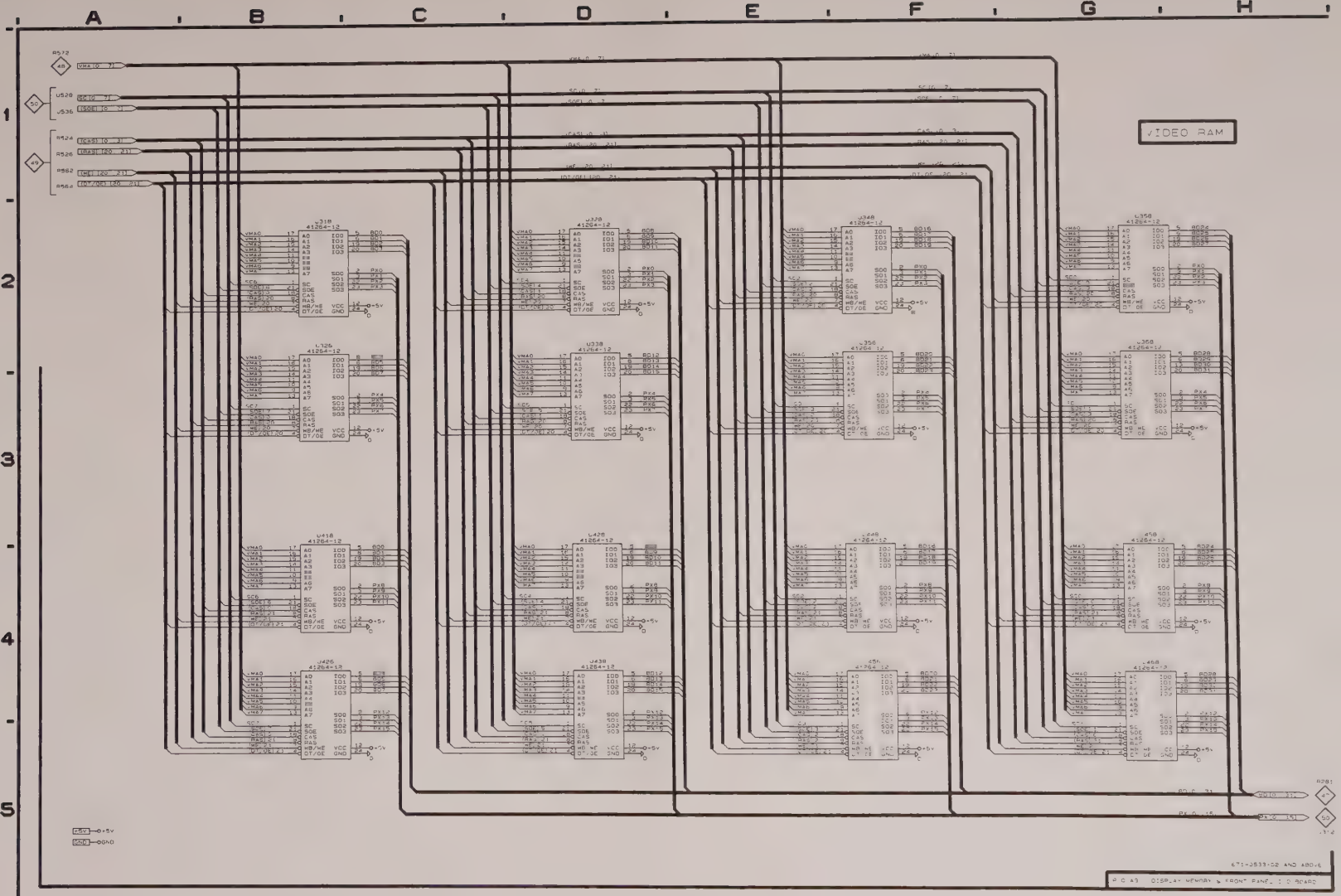
A
B
C
D
E
F
G
H
1
2
3
4
5
VIDEO RAM
U318
41264-12
U328
41264-12
U348
41264-12
U358
41264-12
U326
41264-12
U338
41264-12
U356
41264-12
U368
41264-12
U418
41264-12
U428
41264-12
U448
41264-12
U458
41264-12
U426
41264-12
U438
41264-12
U468
41264-12
R572
U528
U536
R524
R526
R562
R564
R281
R312
+5V
GND
671-0533-02 AND ABOVE
P.O. A3 DISPLAY MEMORY & FRONT PANEL I/O BOARD

512K DISPLAY
MEMORY <54>

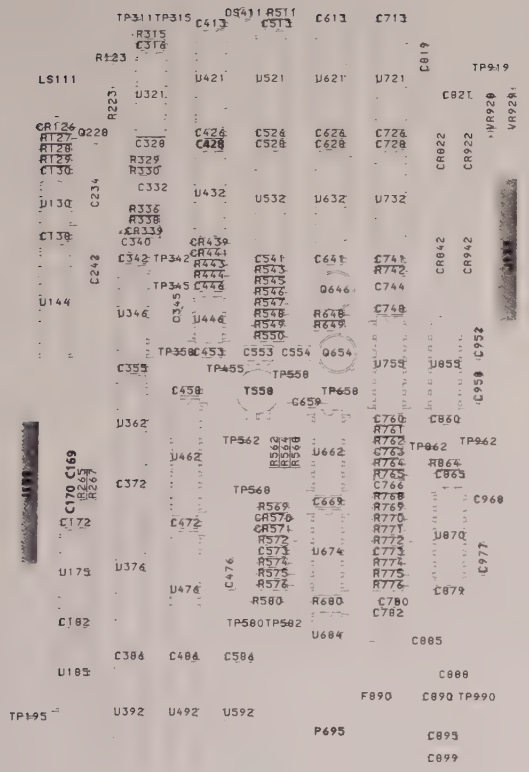

**A10A1 FRONT PANEL BOARD**

**672-1299-02 – 06**

Static Sensitive Devices
*See the section in this manual on handling precautions for static sensitive components.*

## FRONT PANEL BOARD
## Schematic <55> Look-Up Chart

The schematic diagram has an alpha-numeric grid to assist in locating parts within that diagram. The etched circuit boards follow a numbering sequence starting with the lowest number at the upper left corner, as pictured in this manual.

**ASSEMBLY A10A1.** *Partial Assembly A10A1 also shown on Schematic 56.*

| CIRCUIT NUMBER | SCHEM LOCATION | CIRCUIT NUMBER | SCHEM LOCATION |
|---|---|---|---|
| C130 | E1 | C952 | E5 |
| C138 | E1 | C958 | E5 |
| C169 | E4 | C977 | G4 |
| C170 | E3 | | |
| C172 | B4 | CR126 | F1 |
| C182 | B4 | F890 | B1 |
| C234 | E1 | | |
| C242 | C4 | J159 | G2 |
| C316 | C5 | | |
| C342 | C4 | LS111 | F1 |
| C355 | C4 | P695 | A1 |
| C372 | C4 | | |
| C386 | D4 | Q228 | F1 |
| C413 | D5 | | |
| C426 | C5 | R127 | F1 |
| | | R128 | E1 |
| C428 | D4 | R129 | E1 |
| C446 | B5 | R265 | E3 |
| C453 | B5 | R267 | E3 |
| C458 | D4 | | |
| C472 | D4 | TP195 | F5 |
| | | TP315 | F5 |
| C486 | E4 | TP358 | F5 |
| C513 | D5 | TP562 | F5 |
| C526 | D5 | TP580 | F5 |
| C528 | E4 | | |
| C541 | D5 | TP919 | F5 |
| | | TP962 | F5 |
| C573 | B5 | TP990 | F5 |
| C586 | E4 | | |
| C613 | D5 | U130 | E1 |
| C626 | D5 | U144 | D1 |
| C628 | E4 | U175A | B5 |
| | | U175B | B5 |
| C641 | F4 | U175E | E3 |
| C669 | B5 | | |
| C713 | D5 | U175F | E3 |
| C726 | D5 | U185A | D2 |
| C728 | F4 | U185C | B3 |
| | | U185D | C3 |
| C741 | E5 | U185E | C3 |
| C748 | E5 | | |
| C760 | F4 | U185F | C3 |
| C773 | C5 | U362 | F4 |
| C782 | C5 | U376 | F3 |
| | | U392 | B2 |
| C819 | F4 | U462 | C1 |
| C821 | E5 | | |
| C860 | F4 | U492 | B3 |
| C865 | C5 | U592 | B2 |
| C879 | C5 | U870B | B5 |
| C885 | B1 | | |
| C888 | B1 | | |
| C890 | B1 | | |
| C895 | B1 | | |
| C899 | B1 | | |

***See parts list for earlier serial number ranges.**

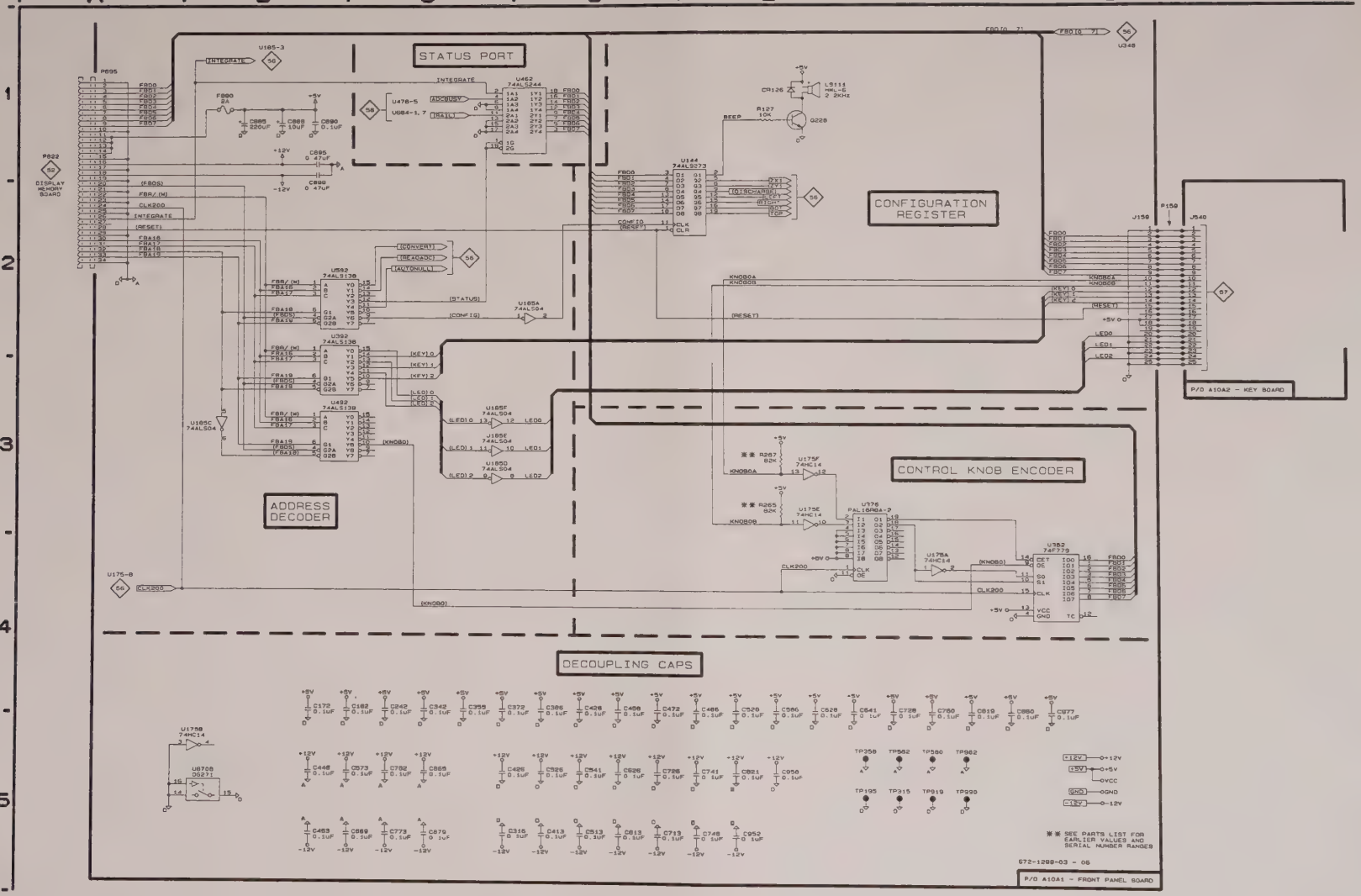
STATUS PORT
CONFIGURATION REGISTER
CONTROL KNOB ENCODER
ADDRESS DECODER
DECOUPLING CAPS
P/O A10A2 - KEY BOARD
P/O A10A1 - FRONT PANEL BOARD
** SEE PARTS LIST FOR EARLIER VALUES AND SERIAL NUMBER RANGES
672-1299-03 - 05

## FRONT PANEL & OSCILLATOR BOARD Schematic <56> Look-Up Chart

The schematic diagram has an alpha-numeric grid to assist in locating parts within that diagram. The etched circuit boards follow a numbering sequence starting with the lowest number at the upper left corner, as pictured in this manual.

**ASSEMBLY A10A1.** *Partial Assembly A10A1 also shown on Schematic 56.*

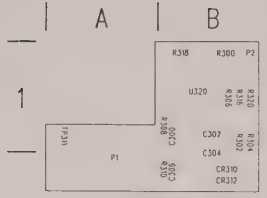


671-1305-00

### A10A1 Oscillator Board

The Oscillator board is located on the upper left hand corner of the front panel bd, at silk screening U321.

| CIRCUIT NUMBER | SCHEM LOCATION |
|---|---|
| **Front Panel Board** | |
| C328 * | A1 |
| C332 * | A2 |
| C340 | E3 |
| C345 | E3 |
| C476 | G3 |
| C553 | C1 |
| C554 | C1 |
| C659 | D2 |
| C744 | C1 |
| C763 | D2 |
| C766 | F1 |
| C780 | G1 |
| C968 | C4 |
| CR339 | D2 |
| CR439 | B4 |
| CR441 | B4 |
| CR570 | D1 |
| CR571 | D1 |
| CR822 | G4 |
| CR842 | G5 |
| CR922 | H4 |
| CR942 | H5 |
| DS411 | A4 |
| J933 | H3 |
| Q646 | B1 |
| Q654 | B1 |
| R123 * | A1 |
| R223 * | A1 |
| R315 * | A1 |
| R329 * | A1 |
| R330 * | A1 |
| R336 | D2 |
| R338 | D2 |
| R443 | B4 |
| R444 | E3 |
| R511 | A4 |
| R543 | B1 |
| R545 | B1 |
| R546 | B1 |
| R547 | B1 |
| R548 | B2 |
| R549 | B2 |
| R550 | C2 |
| R562 | D1 |
| R564 | E2 |
| R568 | D2 |
| R569 | D1 |
| R572 | G1 |
| R574 | G1 |
| R575 | H1 |
| R576 | G2 |
| R580 | H2 |
| R648 | C1 |
| R649 | C1 |
| R680 | G1 |
| R742 | C1 |
| R761 | D1 |
| R762 | D1 |
| R764 | D2 |
| R765 | D1 |
| R768 | E1 |
| R769 | E1 |
| R770 | F1 |
| R771 | F1 |
| R772 | F1 |
| R774 | F1 |
| R775 | G1 |
| R776 | G1 |
| R864 | F1 |
| T558 | C1 |
| TP311 * | B1 |
| TP342 | F3 |
| TP345 | E3 |
| TP455 | C2 |
| TP558 | D1 |
| TP568 | D1 |
| TP582 | H1 |
| TP658 | D1 |
| TP862 | F1 |
| U175C | B4 |
| U175D | D2 |
| U185B | F1 |
| U321 * | A1 |
| U346 | E3 |
| U421 | D5 |
| U432A | A4 |
| U432B | A4 |
| U432C | B4 |
| U432D | B4 |
| U446A | E3 |
| U446B | B1 |
| U476 | G2 |
| U521 | E5 |
| U532 | D3 |
| U621 | G5 |
| U632 | E3 |
| U662 | E1 |
| U674A | D1 |
| U674B | H1 |
| U674C | G1 |
| U674D | F1 |
| U684A | G2 |
| U684B | G2 |
| U721 | G4 |
| U732 | G3 |
| U755 | D4 |
| U855 | E4 |
| U870A | C4 |
| U870C | G1 |
| U870D | F1 |
| VR928 | G4 |
| VR929 | G4 |
| **Oscillator bd** | |
| C300 | B2 |
| C302 | A3 |
| C304 | B3 |
| C306 | B3 |
| CR310 | B2 |
| CR312 | B2 |
| R300 | A3 |
| R302 | B2 |
| R304 | B2 |
| R306 | B2 |
| R308 | B3 |
| R310 | B3 |
| R316 | B3 |
| R318 | B3 |
| R320 | A2 |
| U320 | A3 |
| TP311 | B2 |

*See parts list for earlier serial number ranges.

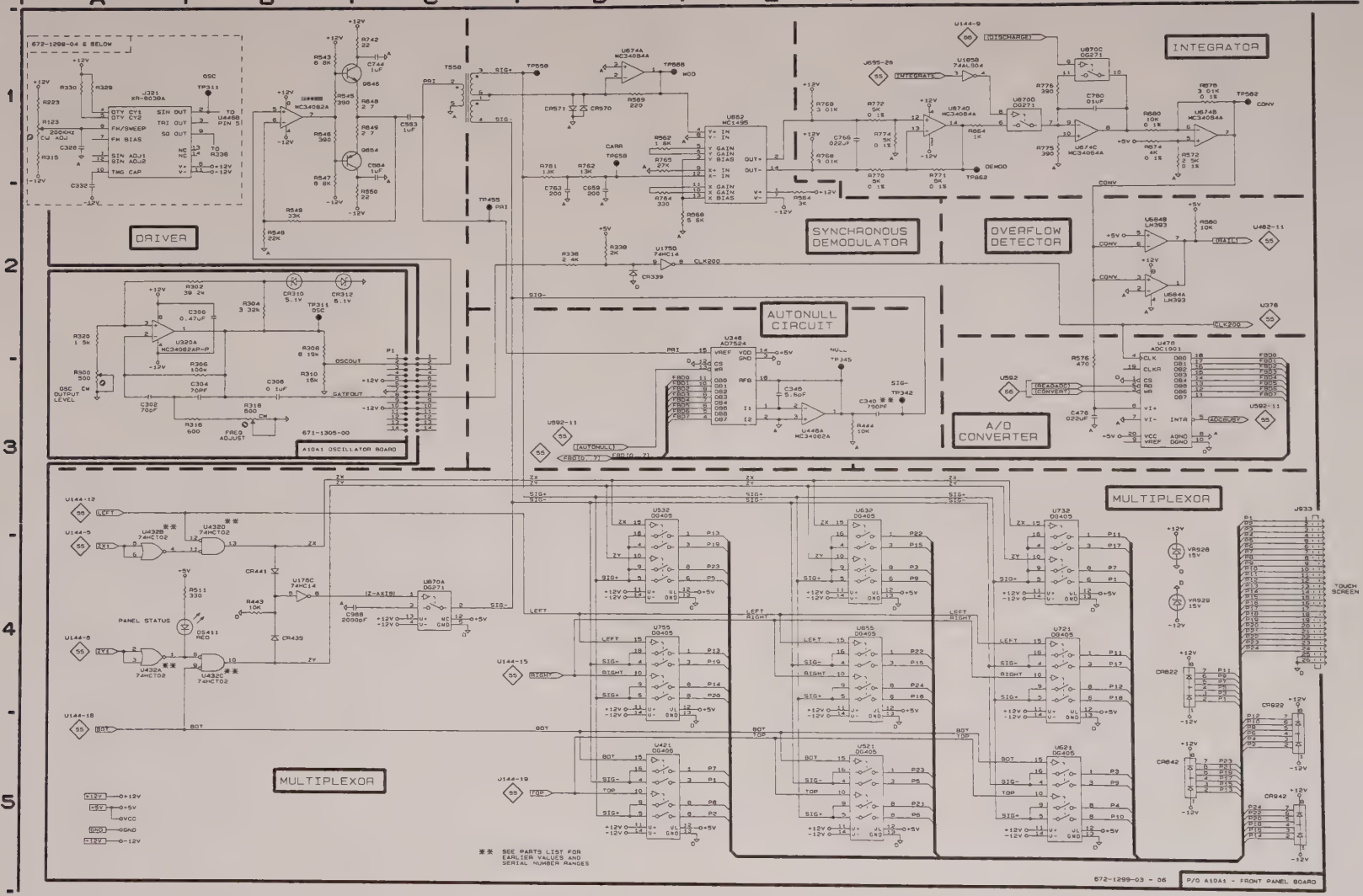
DRIVER
SYNCHRONOUS DEMODULATOR
INTEGRATOR
OVERFLOW DETECTOR
AUTONULL CIRCUIT
A/D CONVERTER
MULTIPLEXOR
MULTIPLEXOR
671-1305-00
A10A1 OSCILLATOR BOARD
672-1298-04 & BELOW
672-1299-03 - 06
P/O A10A1 - FRONT PANEL BOARD
** SEE PARTS LIST FOR EARLIER VALUES AND SERIAL NUMBER RANGES
TOUCH SCREEN

TOUCH PANEL
INTERFACE <56>

671-0109-01

**A10A2 KEY BOARD**

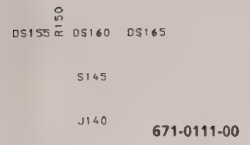


671-0111-00

**A16 ON / OFF BOARD**

Static Sensitive Devices
*See the section in this manual on handling precautions for static sensitive components.*

## KEYBOARD
## Schematic <57> Look-Up Chart

The schematic diagram has an alpha-numeric grid to assist in locating parts within that diagram. The etched circuit boards follow a numbering sequence starting with the lowest number at the upper left corner, as pictured in this manual.

**ASSEMBLIES A10A2 AND A16.**

| CIRCUIT NUMBER | SCHEM LOCATION |
|---|---|
| **A10A2** | |
| C152 | G3 |
| C344 | G3 |
| C360 | H3 |
| C460 | G4 |
| C532 | G4 |
| C544 | H4 |
| C560 | G4 |
| DS142 | E4 |
| DS144 | E5 |
| DS242 | E5 |
| DS244 | E5 |
| J540 | H1 |
| R140A | F5 |
| R140B | F3 |
| R140C | F5 |
| R140D | F2 |
| R140E | F2 |
| R140F | F4 |
| R140G | F5 |
| R140H | F4 |
| R140I | F5 |
| R140J | F4 |
| R160 | B4 |
| R420A | F3 |
| R420B | F3 |
| R420C | F2 |
| R420D | F3 |
| R420E | F2 |
| R420F | F2 |
| R420G | F4 |
| R420H | F4 |
| R420I | F2 |
| R420J | F3 |
| R440 | B3 |
| R540 | B1 |
| S110A | A1 |
| S110B | E2 |
| S120A | A2 |
| S120B | E2 |
| S130A | A3 |
| S130B | E3 |
| S150 | A4 |
| S160 | A5 |
| S210A | A1 |
| S210B | E2 |
| S220A | A2 |
| S220B | E3 |
| S230A | A3 |
| S230B | E3 |
| S250 | A4 |
| S260 | A5 |
| S310A | A1 |
| S310B | E2 |
| S320A | A2 |
| S320B | E3 |
| S330A | A3 |
| S330B | E4 |
| S340A | A4 |
| S340B | E4 |
| S410A | A2 |
| S410B | E2 |
| S420A | A3 |
| S420B | E3 |
| S430A | A3 |
| S430B | E4 |
| S450 | G3 |
| S510A | A2 |
| S510B | E2 |
| S520A | A3 |
| S520B | E3 |
| S530A | A4 |
| S530B | E4 |
| U154 | C5 |
| U362 | D5 |
| U440 | C3 |
| U462 | D4 |
| U540 | C1 |
| U562 | D2 |

| CIRCUIT NUMBER | SCHEM LOCATION |
|---|---|
| **A16** | |
| DS155 | G4 |
| DS160 | H5 |
| DS165 | G5 |
| J140 | H4 |
| R150 | H5 |
| S145 | G5 |

*See parts list for earlier serial number ranges.

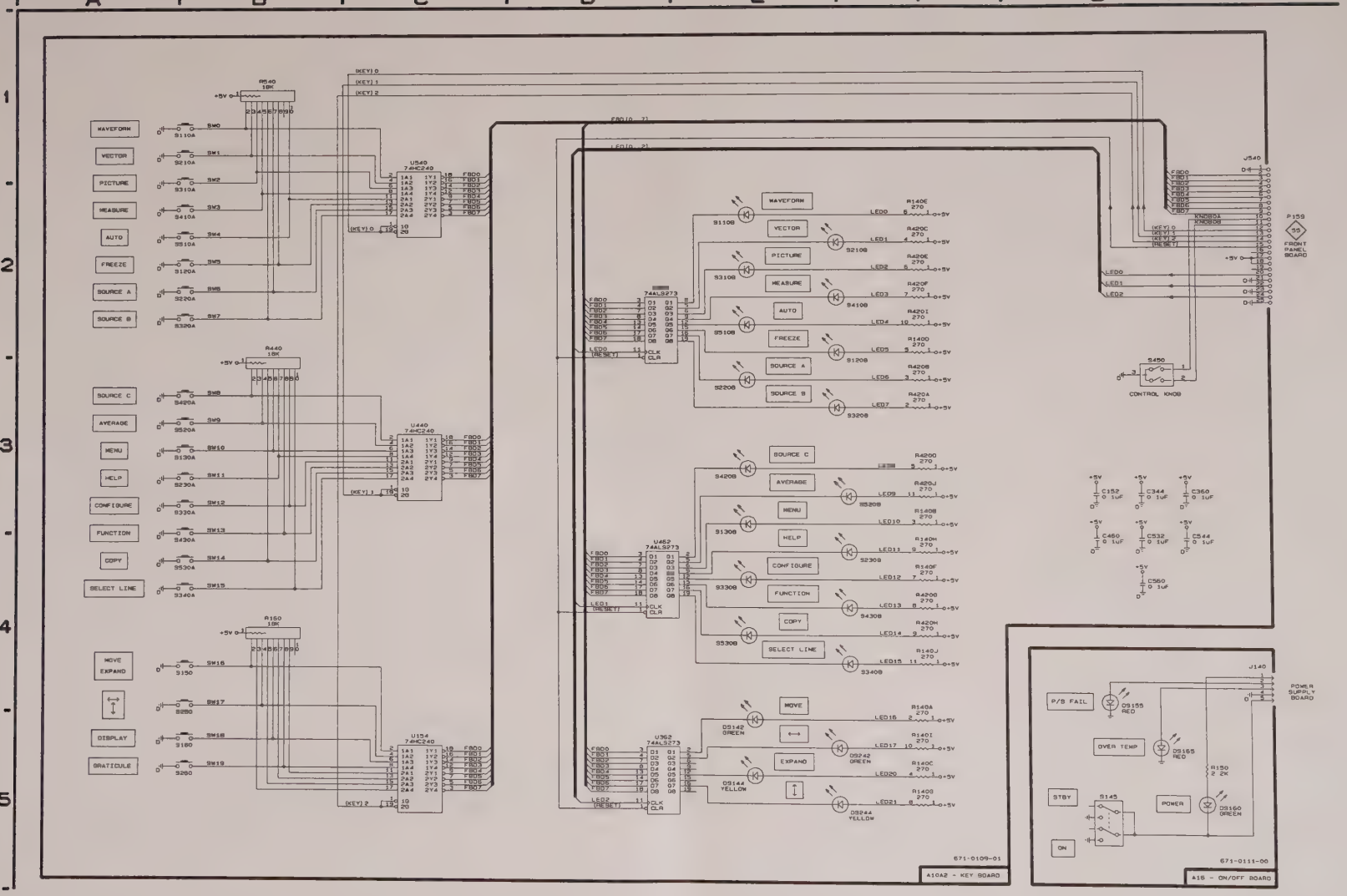
WAVEFORM
VECTOR
PICTURE
MEASURE
AUTO
FREEZE
SOURCE A
SOURCE B
SOURCE C
AVERAGE
MENU
HELP
CONFIGURE
FUNCTION
COPY
SELECT LINE
MOVE EXPAND
DISPLAY
GRATICULE
671-0109-01
A10A2 - KEY BOARD
P/S FAIL
OVER TEMP
STBY
POWER
ON
671-0111-00
A15 - ON/OFF BOARD
CONTROL KNOB
FRONT PANEL BOARD
POWER SUPPLY BOARD

KEY BOARD &
ON/OFF BOARD <57>

## A11A1 BUS INTERCONNECT

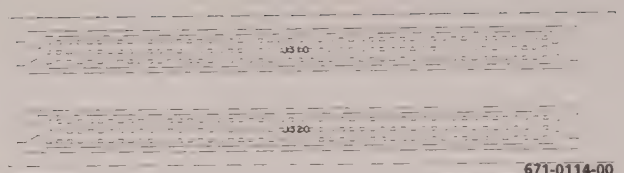


671-0114-00

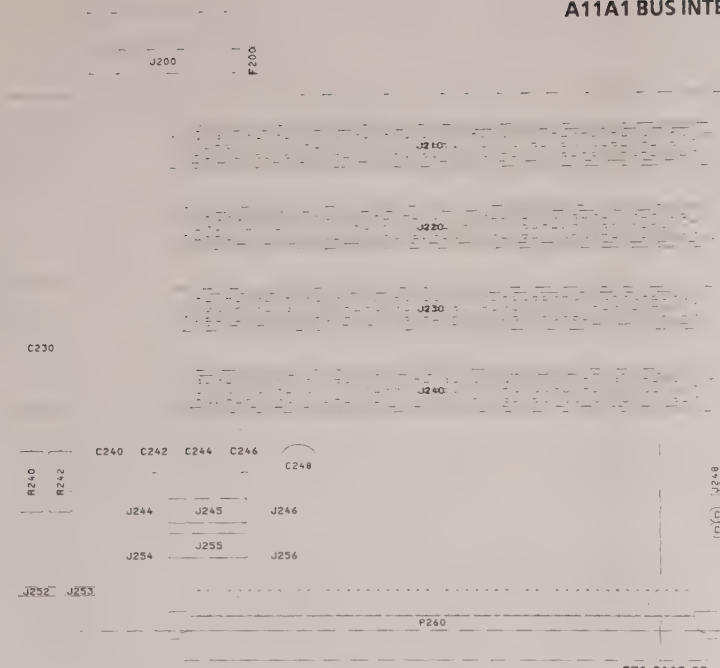


671-0113-00

## A11A2 MAIN INTERFACE, RIGHT

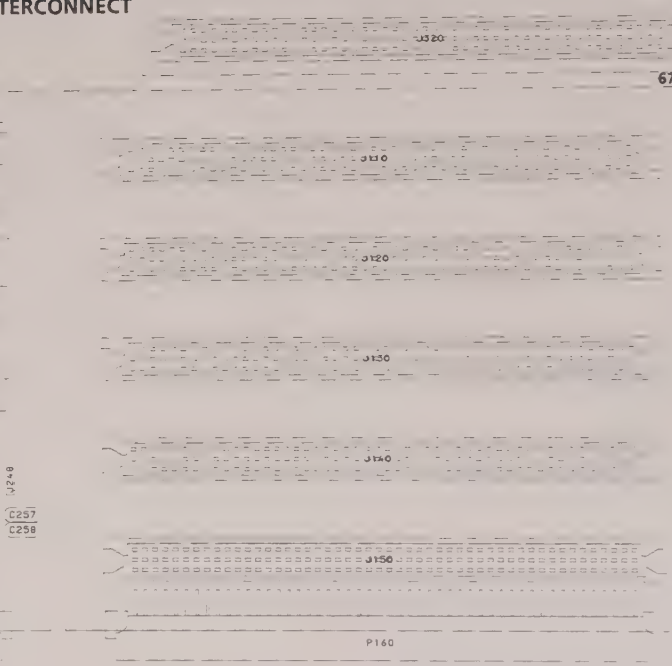


671-0112-00

## A11A3 MAIN INTERFACE, LEFT

**Static Sensitive Devices**
*See the section in this manual on handling precautions for static sensitive components.*

**A11 Main Interconnect Board**
**672-1298-00**

### MAIN INTERCONNECT BOARD Schematic <58> Look-Up Chart

The schematic diagram has an alpha-numeric grid to assist in locating parts within that diagram. The etched circuit boards follow a numbering sequence starting with the lowest number at the upper left corner, as pictured in this manual.

**ASSEMBLY A11.** *Partial Assembly A11 also shown on Schematics 59, 60, and 61.*

*See parts list for earlier serial number ranges.

| CIRCUIT NUMBER | SCHEM LOCATION |
|---|---|
| J210A | A2 |
| J210B | B2 |
| J210C | C2 |
| J220A | E2 |
| J220B | F2 |
| J220C | G2 |
| J230A | A4 |
| J230B | B4 |
| J230C | C4 |
| J240A | E4 |
| J240B | F4 |
| J240C | G4 |

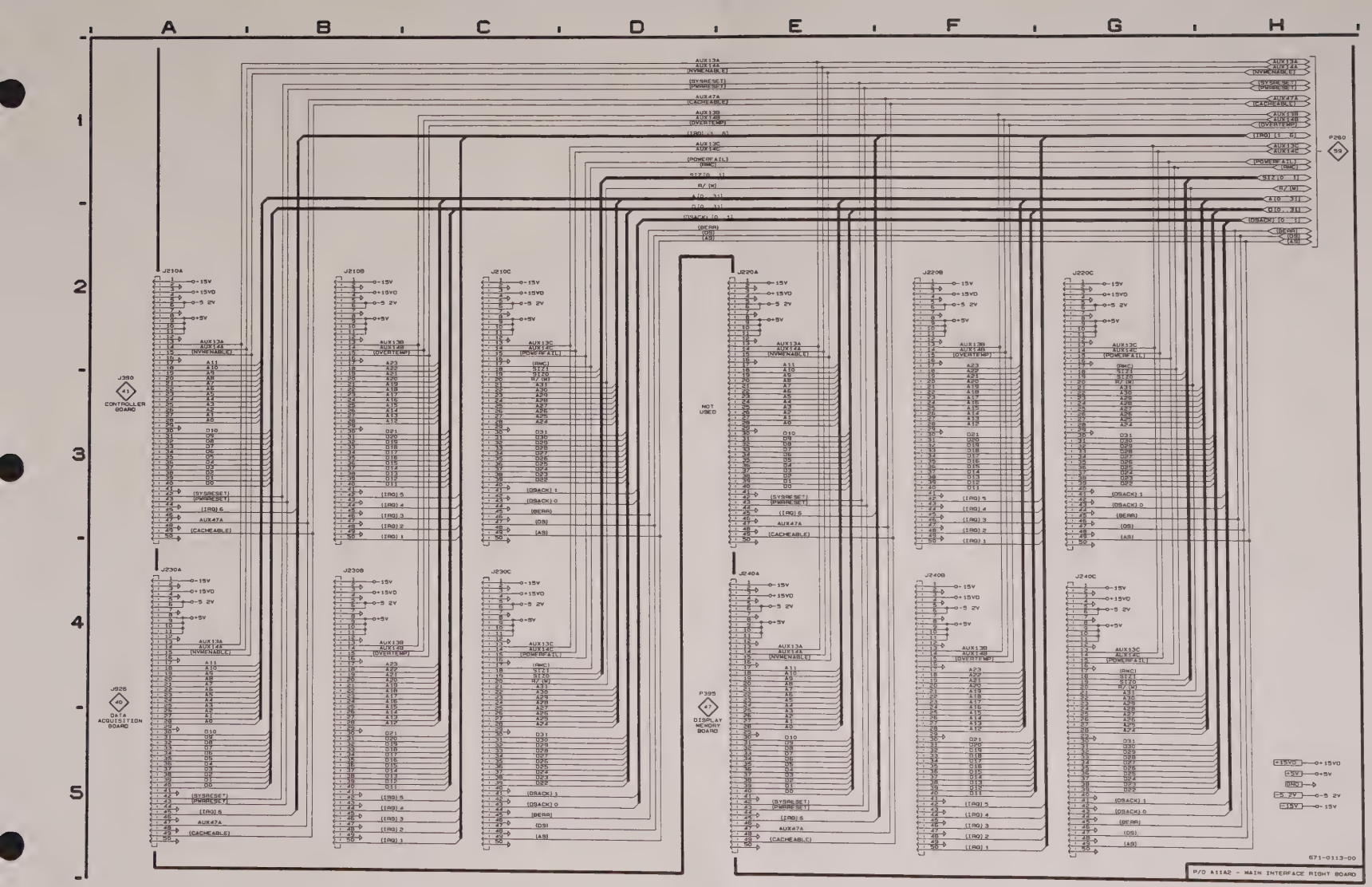


VM 700A

MAIN INTERFACE RIGHT - 1

58

## MAIN INTERCONNECT BOARD Schematic <59> Look-Up Chart

The schematic diagram has an alpha-numeric grid to assist in locating parts within that diagram. The etched circuit boards follow a numbering sequence starting with the lowest number at the upper left corner, as pictured in this manual.

**ASSEMBLY A11.** *Partial Assembly A11 also shown on Schematics 58, 60, and 61.*

| CIRCUIT NUMBER | SCHEM LOCATION |
|---|---|
| C230 | C2 |
| C240 | C5 |
| C242 | C5 |
| C244 | C5 |
| C246 | C5 |
| C248 | C5 |
| C257 | C3 |
| C258 | C3 |
| F200 | H4 |
| J200 | H4 |
| J244 | B4 |
| J245 | B5 |
| J246 | B4 |
| J248 | B3 |
| J252 | B2 |
| J253 | B3 |
| J254 | B4 |
| J255 | B5 |
| J256 | B4 |
| P260A | E1 |
| P260B | F1 |
| P260C | H1 |
| R240 | B2 |
| R242 | B2 |

*See parts list for earlier serial number ranges.

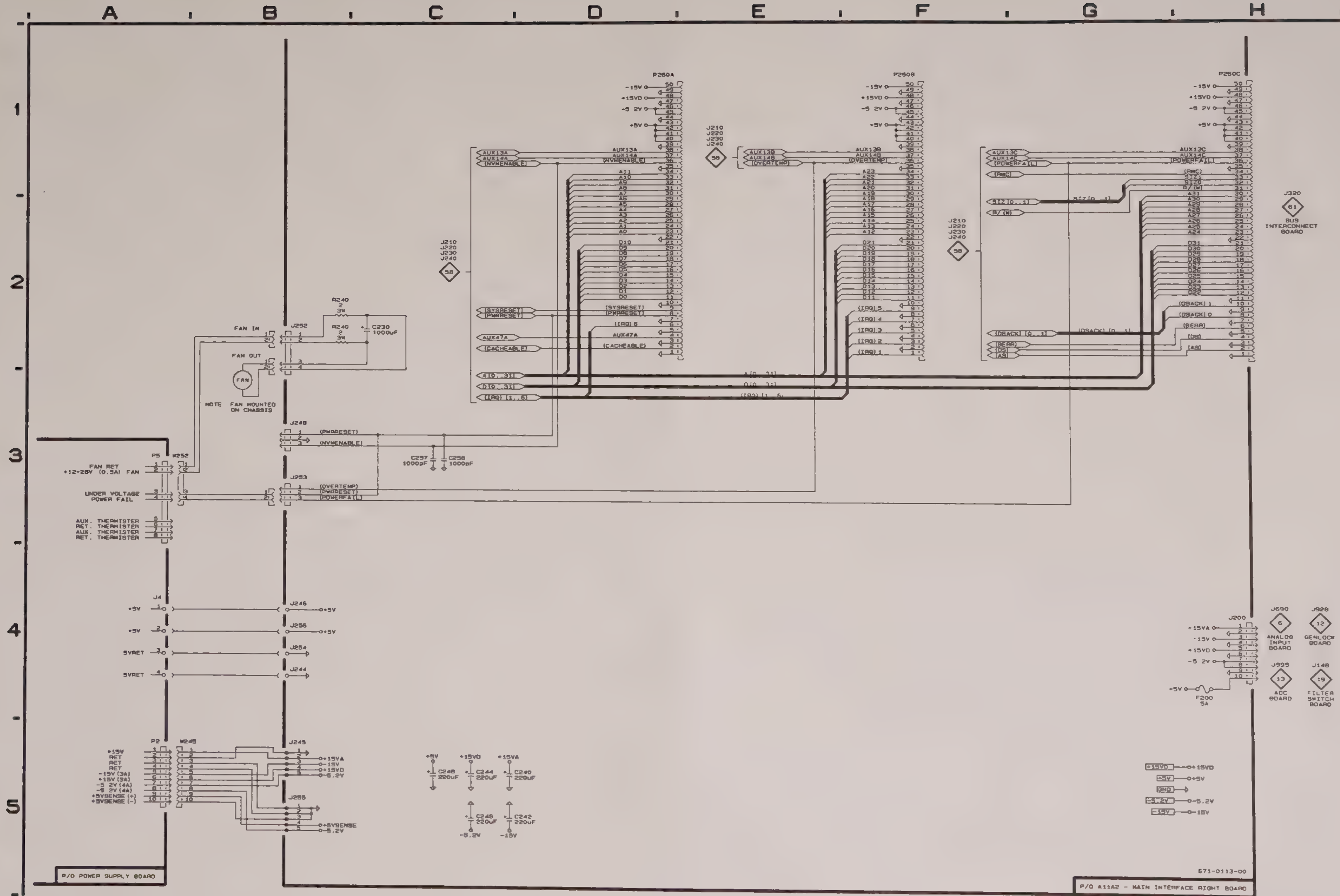
P260A
P260B
P260C
J210
J220
J230
J240
J320
BUS INTERCONNECT BOARD
J252
J248
J253
J246
J256
J254
J244
J245
J255
P5
W252
J4
P2
W248
FAN IN
FAN OUT
NOTE FAN MOUNTED ON CHASSIS
FAN RET
+12-28V (0.5A) FAN
UNDER VOLTAGE POWER FAIL
AUX. THERMISTER
RET. THERMISTER
AUX. THERMISTER
RET. THERMISTER
R240 2 3W
C230 1000uF
C257 1000pF
C258 1000pF
C248 220uF
C244 220uF
C240 220uF
C246 220uF
C242 220uF
J200
F200 5A
J590 ANALOG INPUT BOARD
J928 GENLOCK BOARD
J995 ADC BOARD
J148 FILTER SWITCH BOARD
P/O POWER SUPPLY BOARD
671-0113-00
P/O A11A2 - MAIN INTERFACE RIGHT BOARD

## MAIN INTERCONNECT BOARD Schematic <60> Look-Up Chart

The schematic diagram has an alpha-numeric grid to assist in locating parts within that diagram. The etched circuit boards follow a numbering sequence starting with the lowest number at the upper left corner, as pictured in this manual.

**ASSEMBLY A11.** *Partial Assembly A11 also shown on Schematics 58, 59, and 61.*

| CIRCUIT NUMBER | SCHEM LOCATION |
|---|---|
| J110A | A2 |
| J110B | B2 |
| J110C | C2 |
| J120A | E2 |
| J120B | F2 |
| J120C | G2 |
| J130A | A4 |
| J130B | B4 |
| J130C | C4 |
| J140A | E4 |
| J140B | F4 |
| J140C | G4 |

*See parts list for earlier serial number ranges.

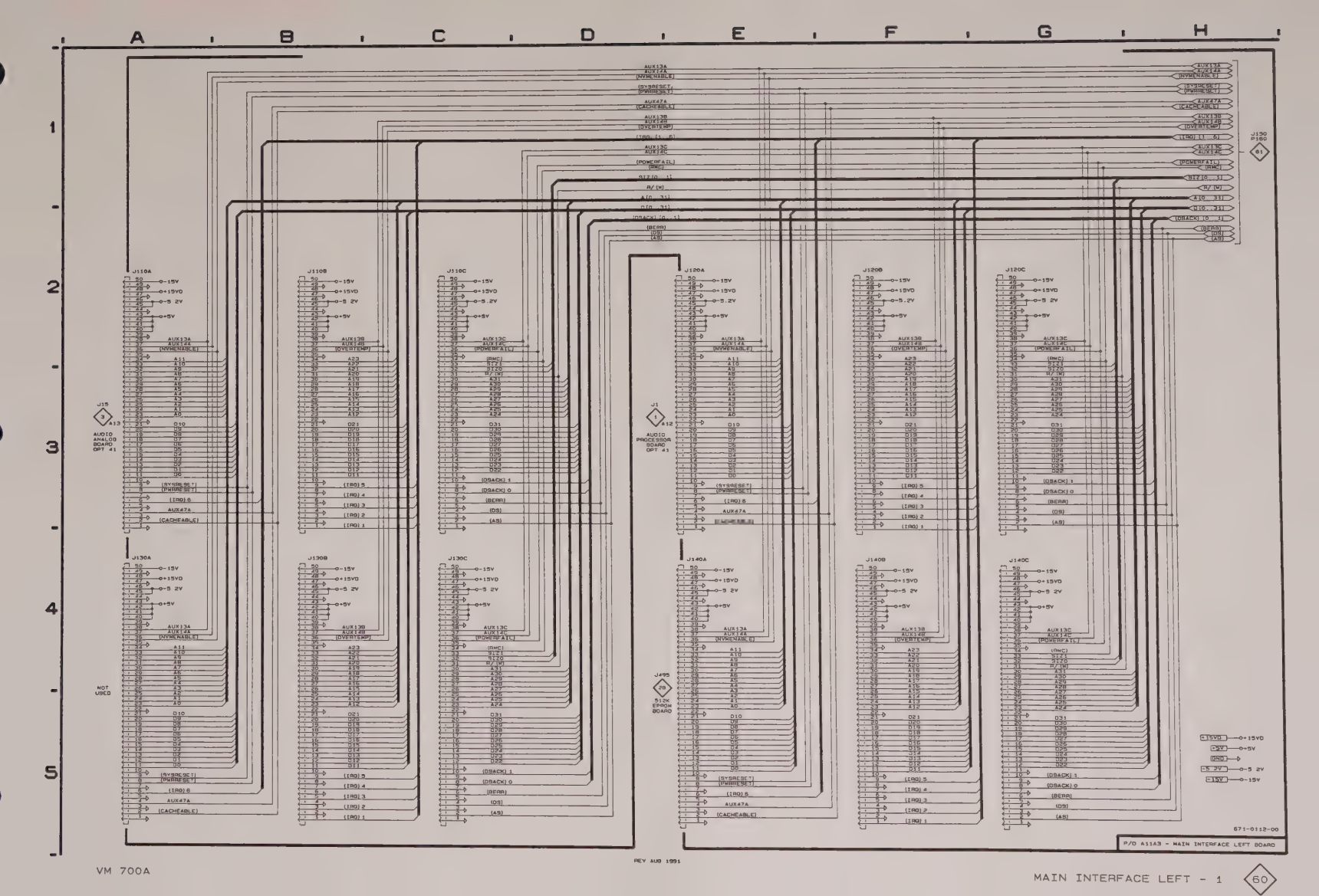
A
B
C
D
E
F
G
H
1
2
3
4
5
J110A
J110B
J110C
J120A
J120B
J120C
J130A
J130B
J130C
J140A
J140B
J140C
J150
P180
J15
AUDIO ANALOG BOARD OPT 41
J1
AUDIO PROCESSOR BOARD OPT 41
J495
512K EPROM BOARD
NOT USED
AUX13A
AUX14A
(NVMENABLE)
AUX13B
AUX14B
(OVERTEMP)
AUX13C
AUX14C
(POWERFAIL)
(RMC)
SIZ(0..1)
R/(W)
A(0..31)
D(0..31)
(DSACK(0..1))
(BERR)
(DS)
(AS)
(SYSRESET)
(PWRRESET)
(IRQ)6
(IRQ)5
(IRQ)4
(IRQ)3
(IRQ)2
(IRQ)1
AUX47A
(CACHEABLE)
(DSACK) 1
(DSACK) 0
+15VD
+5V
UND
-5 2V
-15V
671-0112-00
P/O A11A3 - MAIN INTERFACE LEFT BOARD
REV AUG 1991
VM 700A
MAIN INTERFACE LEFT - 1
60

## MAIN INTERCONNECT BOARD
## Schematic <61> Look-Up Chart

The schematic diagram has an alpha-numeric grid to assist in locating parts within that diagram. The etched circuit boards follow a numbering sequence starting with the lowest number at the upper left corner, as pictured in this manual.

**ASSEMBLY A11.** *Partial Assembly A11 also shown on Schematics 58, 59, and 60.*

| CIRCUIT NUMBER | SCHEM LOCATION |
|---|---|
| J310A | G1 |
| J310B | F1 |
| J310C | E1 |
| J320A | H3 |
| J320B | G3 |
| J320C | F3 |
| J150A | A3 |
| J150B | B3 |
| J150C | C3 |
| P160A | B1 |
| P160B | C1 |
| P160C | E1 |

*See parts list for earlier serial number ranges.

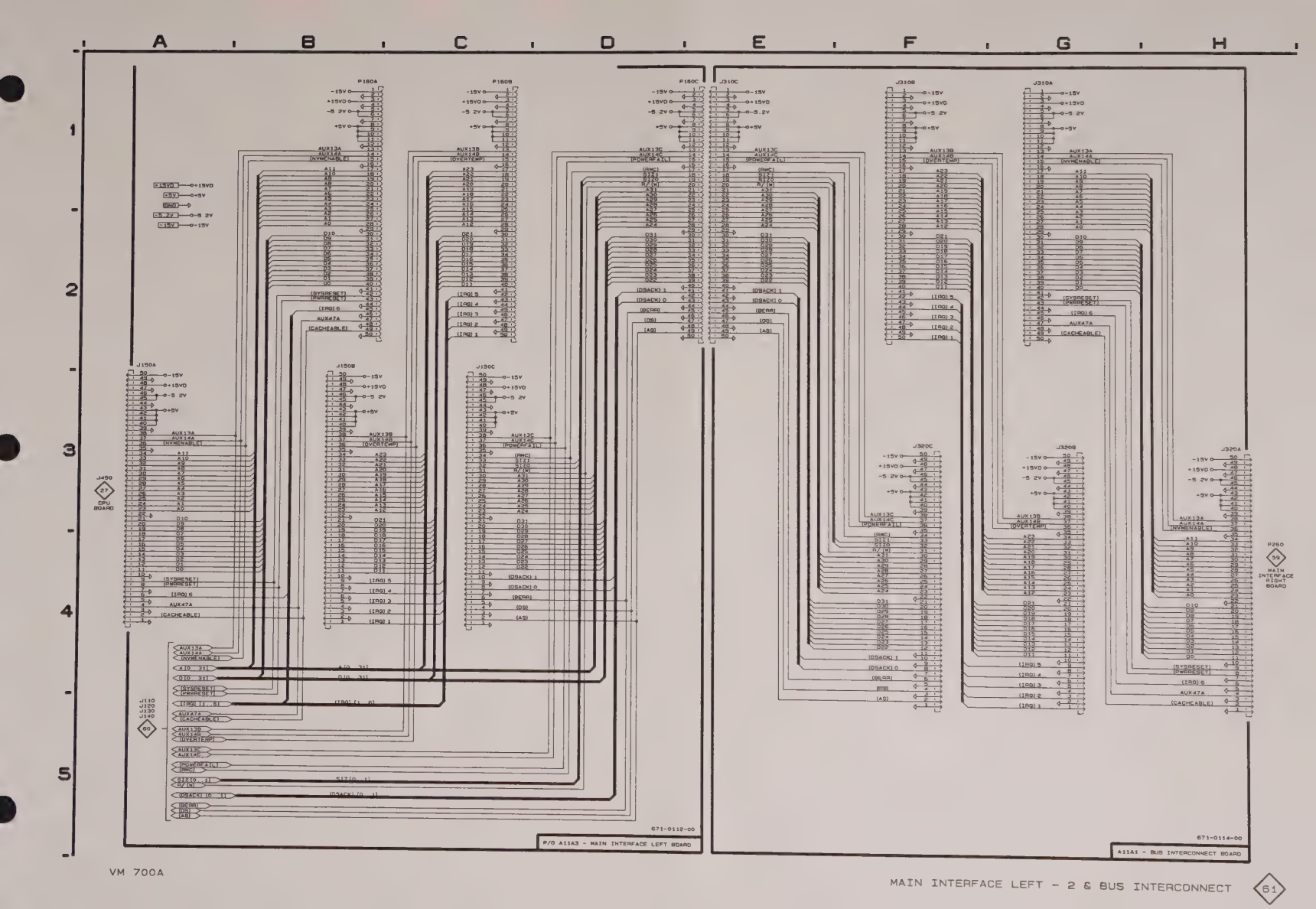
A B C D E F G H
1 2 3 4 5
P180A
P180B
P180C
J310C
J310B
J310A
J150A
J150B
J150C
J320C
J320B
J320A
J490
CPU BOARD
J110
J120
J130
J140
P250
MAIN INTERFACE RIGHT BOARD
671-0112-00
P/O A11A3 - MAIN INTERFACE LEFT BOARD
671-0114-00
A11A1 - BUS INTERCONNECT BOARD

MAIN INTERFACE LEFT – 2
& BUS INTERCONNECT <61>

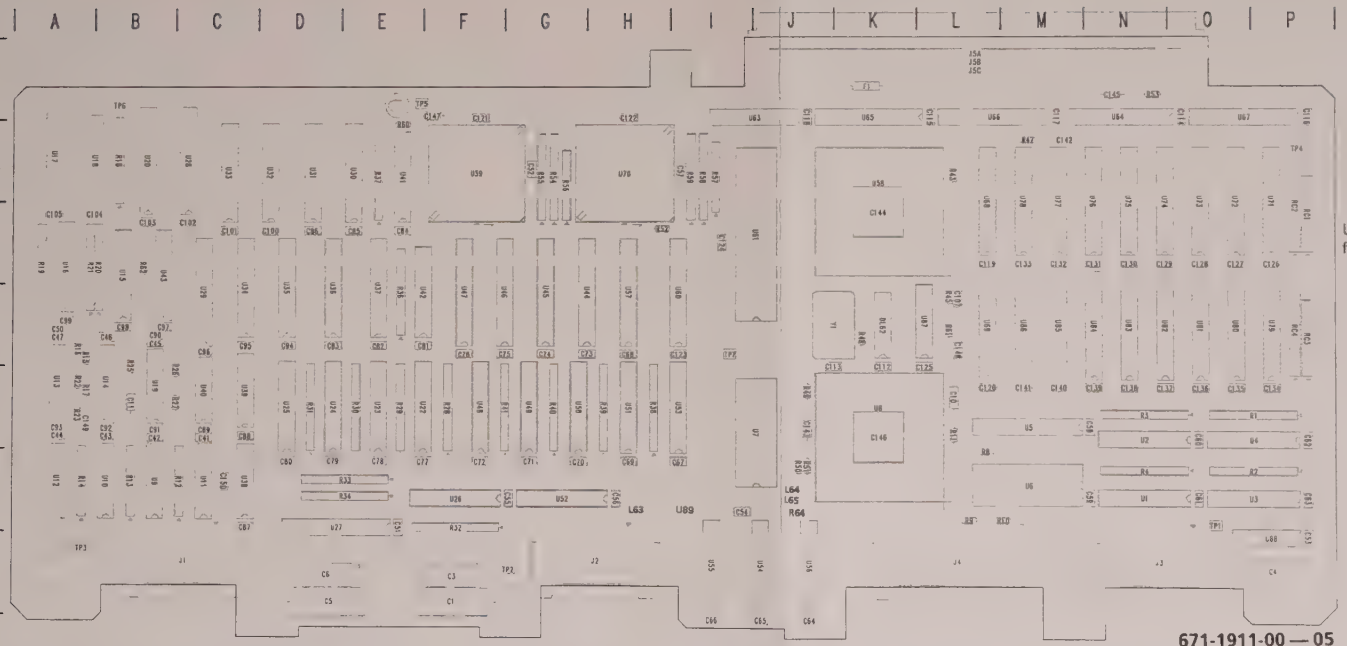

671-1911-00 — 05

Static Sensitive Devices
*See the section in this manual on handling precautions for static sensitive components.*

Use the circuit board lookup table, below, for schematic <1>

| CKT NO. | SCHEM | SCHEM BD LOC | SCHEM BD LOC |
|---|---|---|---|
| U34 | 5 | F4 | C3 |
| U35 | 5 | F3 | D3 |
| U36 | 5 | F2 | D3 |
| U37 | 5 | F2 | E3 |
| U38 | 5 | G2 | C6 |
| U39 | 5 | G2 | C5 |
| U40A | 5 | H3 | C5 |
| U40B | 4 | G2 | C5 |
| U40C | 5 | H3 | C5 |
| U40D | 5 | H3 | C5 |
| U40E | 5 | H3 | C5 |
| U40F | 5 | H3 | C5 |
| U41 | 5 | G4 | E2 |
| U42 | 5 | G4 | E4 |
| U43 | 5 | B4 | B3 |
| U44 | 6 | D1 | G4 |
| U45 | 6 | D2 | G4 |
| U46 | 6 | D3 | F4 |
| U47 | 6 | D3 | F4 |
| U48 | 6 | E4 | F5 |
| U49 | 6 | E3 | G5 |
| U50 | 6 | E2 | G5 |
| U51 | 6 | E2 | H5 |
| U52 | 6 | F4 | G6 |
| U53 | 6 | F5 | I5 |
| U54 | 6 | F2 | J7 |
| U55 | 6 | F1 | I7 |
| U56 | 6 | F2 | J7 |
| U57 | 6 | B2 | H4 |
| U58 | 7 | C2 | K3 |
| U59 | 7 | G1 | F2 |
| U60 | 7 | D4 | I4 |
| U61 | 7 | G4 | J3 |
| U63 | 7 | A1 | I2 |
| U63 | 7 | A1 | I2 |
| U64 | 7 | D3 | N2 |
| U65 | 7 | D2 | K2 |
| U66 | 7 | D2 | L2 |
| U67 | 7 | D1 | Q2 |
| U68 | 7 | E2 | L2 |
| U69 | 7 | E2 | L4 |
| U70 | 7 | G3 | H2 |
| U71 | 8 | D1 | P2 |
| U72 | 8 | E1 | Q2 |
| U73 | 8 | F1 | Q2 |
| U74 | 8 | G1 | N2 |
| U75 | 8 | D2 | N2 |
| U76 | 8 | E2 | N2 |
| U77 | 8 | F2 | M2 |
| U78 | 8 | G2 | M2 |
| U79 | 8 | D3 | P4 |
| U80 | 8 | E3 | O4 |
| U81 | 8 | F3 | O4 |
| U82 | 8 | G3 | N4 |
| U83 | 8 | D4 | N4 |
| U84 | 8 | E4 | N4 |
| U85 | 8 | F4 | M4 |
| U86 | 8 | G4 | M4 |
| U87 | 8 | B2 | L4 |
| U88A | 2 | B3 | P7 |
| U88B | 2 | A4 | P7 |
| U88C | 2 | A4 | P7 |
| U88D | 2 | A4 | P7 |
| U88E | 2 | A4 | P7 |
| U88F | 2 | A4 | P7 |
| U89 * | 2 | F4 | I6 |
| Y1 | 7 | A2 | J4 |

## A18 DATA ACQUISITION/CONTROLLER BOARD

| CKT NO | SCHEM | SCHEM BD LOC | SCHEM BD LOC |
|---|---|---|---|
| C1 | 1 | F4 | F7 |
| C3 | 1 | F4 | F7 |
| C4 | 1 | G4 | P7 |
| C5 | 1 | F4 | D7 |
| C6 | 1 | F4 | D7 |
| C10 | 2 | D5 | L5 |
| C11 | 3 | C3 | B5 |
| C41 | 6 | F5 | C5 |
| C42 | 6 | F5 | B5 |
| C43 | 6 | F5 | B5 |
| C44 | 6 | G5 | A5 |
| C45 | 6 | G5 | B4 |
| C46 | 6 | G5 | B4 |
| C47 | 6 | H5 | A4 |
| C50 | 6 | A5 | A4 |
| C51 | 6 | B5 | E6 |
| C52 | 6 | B5 | G2 |
| C53 | 6 | B5 | P6 |
| C54 | 6 | B5 | I6 |
| C55 | 6 | C5 | G6 |
| C56 | 6 | C5 | H6 |
| C57 | 6 | C5 | I2 |
| C58 | 6 | D5 | N5 |
| C59 | 6 | D5 | N6 |
| C60 | 6 | D5 | O5 |
| C61 | 6 | E5 | O6 |
| C62 | 6 | E5 | P5 |
| C63 | 6 | E5 | P6 |
| C64 | 6 | E5 | J8 |
| C65 | 6 | F5 | J8 |
| C66 | 6 | F5 | I8 |
| C67 | 6 | F5 | I6 |
| C68 | 6 | G5 | H4 |
| C69 | 6 | G5 | H6 |
| C70 | 6 | G5 | G6 |
| C71 | 6 | H5 | G6 |
| C72 | 6 | A5 | F6 |
| C73 | 6 | B5 | G4 |
| C74 | 6 | B5 | G4 |
| C75 | 6 | B5 | F4 |
| C76 | 6 | B5 | F4 |
| C77 | 6 | C5 | E6 |
| C78 | 6 | C5 | E6 |
| C79 | 6 | C5 | D6 |
| C80 | 6 | D5 | D6 |
| C81 | 6 | D5 | E4 |
| C82 | 6 | D5 | E4 |
| C83 | 6 | E5 | D4 |
| C84 | 6 | E5 | E3 |
| C85 | 6 | E5 | E3 |
| C86 | 6 | E5 | D3 |
| C87 | 6 | F5 | C6 |
| C88 | 6 | F5 | C5 |
| C89 | 6 | F5 | C5 |
| C90 | 6 | G5 | B4 |
| C91 | 6 | G5 | B5 |
| C92 | 6 | G5 | B5 |
| C93 | 6 | H5 | A5 |
| C94 | 6 | A5 | D4 |
| C95 | 6 | B5 | C4 |
| C96 | 6 | B5 | C4 |
| C97 | 6 | B5 | B4 |
| C98 | 6 | B5 | C5 |
| C99 | 6 | C5 | A4 |
| C100 | 6 | C5 | D3 |
| C101 | 6 | C5 | C3 |
| C102 | 6 | D5 | C3 |
| C103 | 6 | D5 | B3 |
| C104 | 6 | D5 | A3 |
| C105 | 6 | E5 | A3 |
| C107 | 7 | E3 | L4 |
| C112 | 7 | A3 | K5 |
| C113 | 7 | A3 | J5 |
| C114 | 7 | D3 | O1 |
| C115 | 7 | D2 | L1 |
| C116 | 7 | D2 | P1 |
| C117 | 7 | D3 | M1 |
| C118 | 7 | H5 | J1 |
| C119 | 7 | H5 | L3 |
| C120 | 7 | H5 | L5 |
| C121 | 7 | G2 | F2 |
| C122 | 7 | G3 | H2 |
| C123 | 7 | E5 | I4 |
| C124 | 7 | H5 | I3 |
| C125 | 8 | B2 | L5 |
| C126 | 8 | B5 | P3 |
| C127 | 8 | B5 | O3 |
| C128 | 8 | B5 | O3 |
| C129 | 8 | C5 | N3 |
| C130 | 8 | C5 | N3 |
| C131 | 8 | C5 | N3 |
| C132 | 8 | D5 | M3 |
| C133 | 8 | D5 | M3 |
| C134 | 8 | D5 | P5 |
| C135 | 8 | E5 | O5 |
| C136 | 8 | E5 | O5 |
| C137 | 8 | E5 | N5 |
| C138 | 8 | F5 | N5 |
| C139 | 8 | F5 | N5 |
| C140 | 8 | F5 | M5 |
| C141 | 8 | G5 | M5 |
| C142 | 8 | G5 | M2 |
| C143 | 2 | A3 | J5 |
| C144 | 7 | C5 | K3 |
| C145 | 7 | D5 | N1 |
| C146 | 2 | C4 | K5 |
| C147 * | 5 | A1 | F3 |
| C148 | 8 | A2 | L4 |
| C149 | 3 | C4 | A5 |
| C150 | 3 | E5 | C6 |
| DL62 | 7 | A3 | K4 |
| F1 | 1 | E1 | K1 |
| J1 | 3 | A3 | C7 |
| J2 | 4 | H2 | H7 |
| J3 | 4 | H4 | N7 |
| J4 | 6 | H1 | L7 |
| J5A | 1 | B1 | L1 |
| J5B | 1 | C1 | L1 |
| J5C | 1 | D1 | L1 |
| L63 * | 2 | F4 | H6 |
| L64 * | 2 | D4 | J6 |
| L65 * | 2 | E4 | J6 |
| R1 | 1 | C3 | O5 |
| R2 | 1 | C3 | O6 |
| R3 | 1 | C4 | N5 |
| R4 | 1 | C5 | N6 |
| R8 | 2 | G3 | L6 |
| R9 | 2 | G3 | L6 |
| R10 | 2 | G3 | L6 |
| R11 | 2 | D4 | L5 |
| R12A | 3 | B1 | C6 |
| R12B | 3 | B2 | C6 |
| R12C | 3 | B1 | C6 |
| R12D | 3 | B1 | C6 |
| R13A | 3 | B2 | B6 |
| R13B | 3 | B3 | B6 |
| R13C | 3 | B2 | B6 |
| R13D | 3 | B2 | B6 |
| R14A | 3 | C5 | A6 |
| R14B | 3 | C4 | A6 |
| R14C | 3 | C5 | A6 |
| R14D | 3 | C5 | A6 |
| R15 | 3 | C3 | A4 |
| R16 | 3 | D3 | A4 |
| R17 | 3 | D3 | A5 |
| R18 | 3 | G4 | B2 |
| R19A | 3 | F2 | A3 |
| R19B | 3 | F2 | A3 |
| R19C | 3 | F2 | A3 |
| R19D | 3 | F2 | A3 |
| R19E | 3 | F2 | A3 |
| R20A | 3 | F2 | B3 |
| R20B | 3 | F2 | B3 |
| R20C | 3 | F1 | B3 |
| R20D | 3 | F1 | B3 |
| R20E | 3 | F1 | B3 |
| R21A | 3 | F1 | A3 |
| R21B | 3 | F1 | A3 |
| R21C | 3 | F1 | A3 |
| R21D | 3 | F3 | A3 |
| R21E | 3 | F3 | A3 |
| R22 | 3 | B3 | A5 |
| R23 | 3 | C4 | A5 |
| R25 | 3 | C3 | B4 |
| R26 | 3 | B4 | B4 |
| R27 | 3 | B4 | B5 |
| R28 | 4 | B1 | F5 |
| R29 | 4 | B2 | E5 |
| R30 | 4 | B3 | E5 |
| R31 | 4 | B4 | D5 |
| R32 | 4 | E2 | F6 |
| R33A | 5 | C2 | D6 |
| R33B | 5 | C2 | D6 |
| R33C | 5 | C2 | D6 |
| R33D | 5 | C2 | D6 |
| R33E | 5 | C3 | D6 |
| R34A | 5 | C2 | D6 |
| R34B | 5 | C2 | D6 |
| R34C | 5 | C2 | D6 |
| R34D | 5 | C3 | D6 |
| R34E | 5 | C3 | D6 |
| R36A | 6 | C2 | E4 |
| R36B | 6 | C3 | E4 |
| R36C | 6 | C1 | E4 |
| R36D | 6 | C2 | E4 |
| R36E | 6 | C2 | E4 |
| R37A | 6 | C2 | E2 |
| R37B | 6 | C2 | E2 |
| R37C | 6 | C2 | E2 |
| R37D | 6 | C2 | E2 |
| R37E | 6 | C2 | E2 |
| R38 | 6 | E2 | H5 |
| R39 | 6 | E2 | H5 |
| R40 | 6 | E3 | G5 |
| R41 | 6 | E4 | F5 |
| R43 | 7 | A2 | L2 |
| R45 | 7 | E3 | L4 |
| R47 | 8 | G5 | M2 |
| R48 | 7 | A3 | K4 |
| R49 | 2 | A3 | J5 |
| R50 * | 2 | F4 | J6 |
| R51 * | 2 | F4 | J6 |
| R52 | 7 | F4 | H3 |
| R53 | 7 | D4 | N1 |
| R54A | 7 | H1 | G2 |
| R54B | 7 | H1 | G2 |
| R54C | 7 | H1 | G2 |
| R54D | 7 | H1 | G2 |
| R54E | 7 | H2 | G2 |
| R55A | 7 | H2 | G2 |
| R55B | 7 | H2 | G2 |
| R55C | 7 | H2 | G2 |
| R55D | 7 | H2 | G2 |
| R55E | 7 | H2 | G2 |
| R56A | 7 | H2 | G2 |
| R56B | 7 | H2 | G2 |
| R56C | 7 | H3 | G2 |
| R56D | 7 | H3 | G2 |
| R57A | 7 | H3 | I2 |
| R57B | 7 | H3 | I2 |
| R57C | 7 | H3 | I2 |
| R57D | 7 | H3 | I2 |
| R58A | 7 | H4 | I2 |
| R58B | 7 | H4 | I2 |
| R58C | 7 | H4 | I2 |
| R58D | 7 | H4 | I2 |
| R58E | 7 | H4 | I2 |
| R59A | 7 | H4 | I2 |
| R59B | 7 | H4 | I2 |
| R59C | 7 | H4 | I2 |
| R59D | 7 | H4 | I2 |
| R59E | 7 | H4 | I2 |
| R60 | 5 | A1 | E3 |
| R61 | 8 | A2 | L4 |
| R62 | 3 | F2 | B3 |
| R64 * | 2 | G4 | J6 |
| RC1 | 8 | C1 | P3 |
| RC2 | 8 | C1 | P2 |
| RC3 | 8 | C3 | P4 |
| RC4 | 8 | C3 | P4 |
| TP1 | 1 | F5 | O6 |
| TP2 | 1 | F5 | F7 |
| TP3 | 1 | F5 | A7 |
| TP4 | 1 | G5 | P2 |
| TP5 | 1 | F5 | E1 |
| TP6 | 1 | F5 | B1 |
| TP7 | 1 | G5 | I4 |
| U1 | 1 | D5 | N6 |
| U2 | 1 | D4 | N5 |
| U3 | 1 | D4 | O6 |
| U4 | 1 | D3 | O5 |
| U5 | 1 | F3 | M5 |
| U6 | 2 | G2 | M6 |
| U7 | 2 | G3 | J5 |
| U8 | 2 | C2 | K5 |
| U9A | 3 | C1 | B6 |
| U9B | 3 | C1 | B6 |
| U9C | 3 | C1 | B6 |
| U9D | 3 | C2 | B6 |
| U10A | 3 | C2 | B6 |
| R59E | 7 | H4 | I2 |
| U10B | 3 | C2 | B6 |
| U10C | 3 | C2 | B6 |
| U10D | 3 | C3 | B6 |
| U11A | 3 | C3 | C6 |
| U11B | 3 | E5 | C6 |
| U11C | 3 | E5 | C6 |
| U11D | 3 | E5 | C6 |
| U12A | 3 | C5 | A6 |
| U12B | 3 | C5 | A6 |
| U12C | 3 | C5 | A6 |
| U12D | 3 | C4 | A6 |
| U13A | 3 | C4 | A5 |
| U13B | 3 | C3 | A5 |
| U13C | 3 | E3 | A5 |
| U13D | 3 | D4 | A5 |
| U14 | 3 | D3 | B5 |
| U15 | 3 | F1 | B3 |
| U16 | 3 | E4 | A3 |
| U17 | 3 | G3 | A2 |
| U18 | 3 | G4 | A2 |
| U19 | 3 | B4 | B5 |
| U20 | 3 | E2 | B2 |
| U22 | 4 | C2 | E5 |
| U23 | 4 | C2 | E5 |
| U24 | 4 | C3 | D5 |
| U25 | 4 | C4 | D5 |
| U26 | 4 | E2 | F6 |
| U27 | 4 | E4 | D6 |
| U28 | 5 | B2 | C2 |
| U29 | 5 | B2 | C4 |
| U30 | 5 | D2 | E2 |
| U31 | 5 | D2 | D2 |
| U32 | 5 | D3 | D2 |
| U33 | 5 | D4 | C2 |

* See parts list for serial number changes.

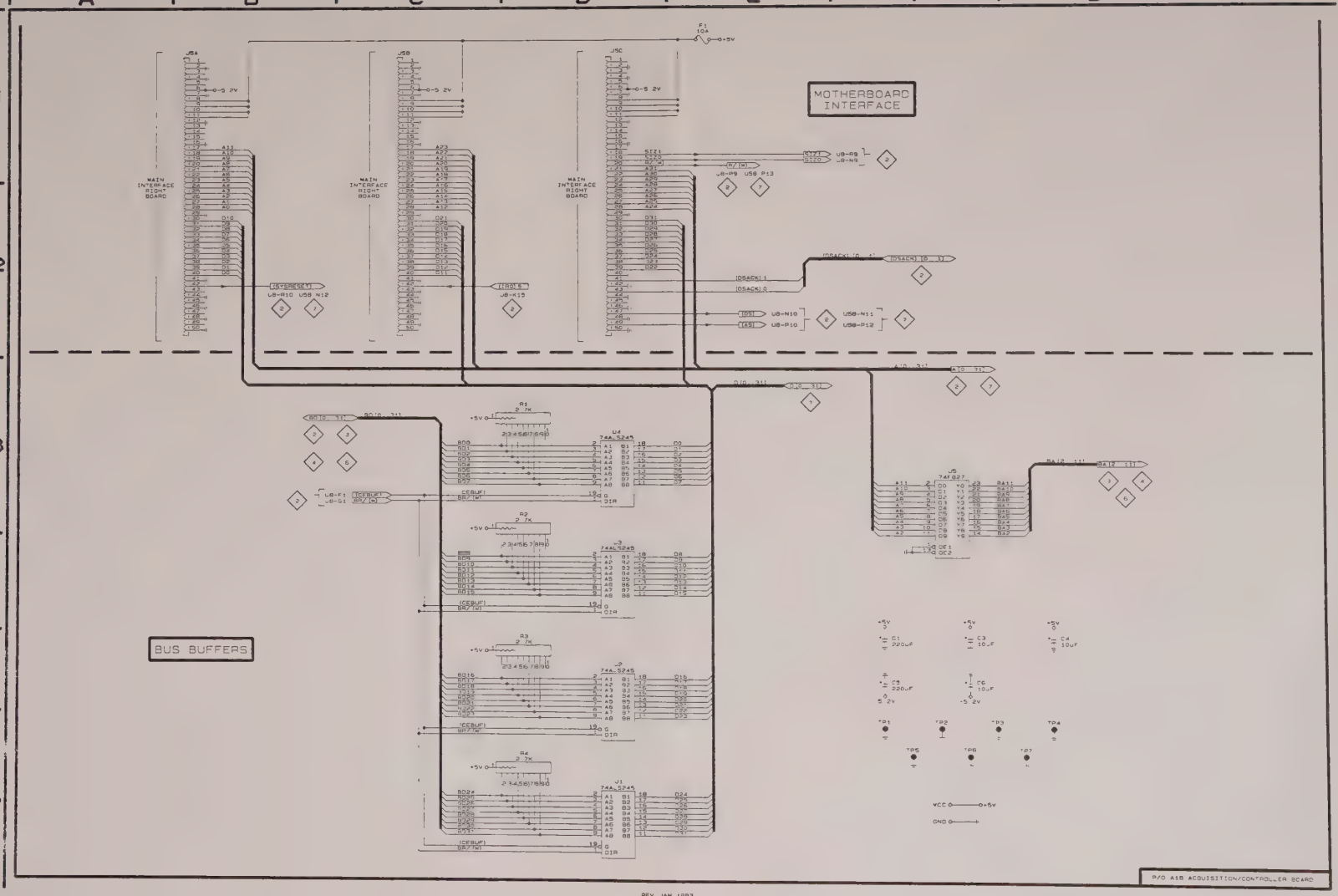
MOTHERBOARD INTERFACE
BUS BUFFERS
MAIN INTERFACE RIGHT BOARD
P/O A18 ACQUISITION/CONTROLLER BOARD

## ACQUISITION/CONTROLLER BOARD
## Schematic <2> Look-Up Chart

**Assembly A18.** Partial Assembly A18 also shown on schematics 1, 3, 4, 5, 6, 7, and 8

| CIRCUIT NUMBER | SCHEM LOCATION | BOARD LOCATION |
|---|---|---|
| C10 | D5 | L5 |
| C143 | A3 | J5 |
| C146 | C4 | K5 |
| L63 * | F4 | H6 |
| L63 * | D4 | J6 |
| L63 * | E4 | J6 |
| R8 | G3 | L6 |
| R9 | G3 | L6 |
| R10 | G3 | L6 |
| R11 | D4 | L5 |
| R49 | A3 | J5 |
| R50 * | F4 | J6 |
| R51 * | E4 | J6 |
| R64 | G4 | J6 |
| U6 | G2 | M6 |
| U7 | G3 | J5 |
| U8 | C2 | K5 |
| U88A | B3 | P7 |
| U88B | A4 | P7 |
| U88C | A4 | P7 |
| U88D | A4 | P7 |
| U88E | A4 | P7 |
| U88F | A4 | P7 |
| U89 * | F4 | I6 |

*See parts list for serial number ranges.

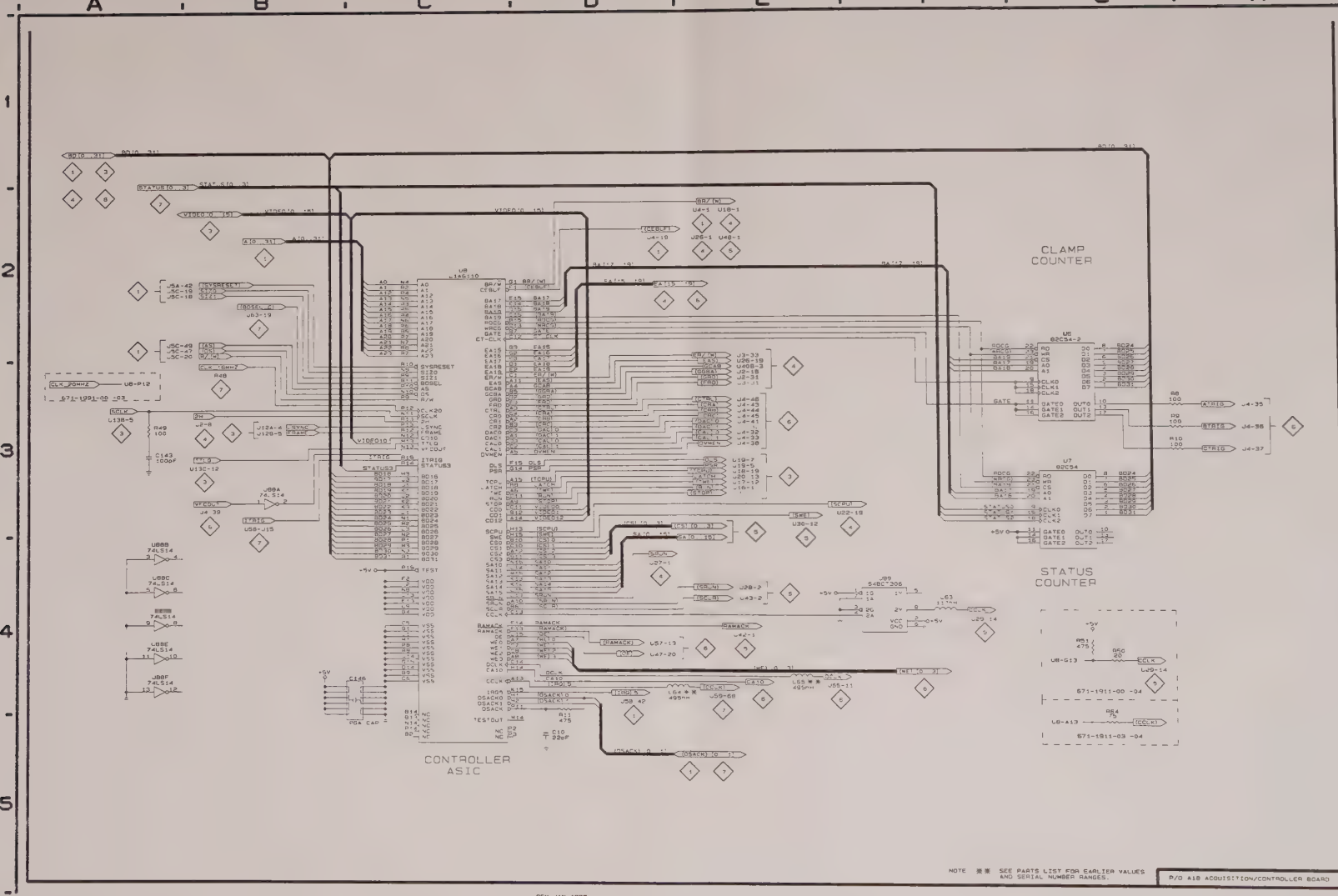
CLAMP COUNTER
STATUS COUNTER
CONTROLLER ASIC
NOTE ** SEE PARTS LIST FOR EARLIER VALUES AND SERIAL NUMBER RANGES.
P/O A18 ACQUISITION/CONTROLLER BOARD
REV JAN 1993

## ACQUISITION/CONTROLLER BOARD
## Schematic <3> Look-Up Chart

**Assembly A18.** Partial Assembly A18 also shown on schematics 1, 2, 4, 5, 6, 7, and 8.

| CIRCUIT NUMBER | SCHEM LOCATION | BOARD LOCATION |
|---|---|---|
| C11 | C3 | B5 |
| C149 | C4 | A5 |
| C150 | E5 | C6 |
| J1 | A3 | C7 |
| R12A | B1 | C6 |
| R12B | B2 | C6 |
| R12C | B1 | C6 |
| R12D | B1 | C6 |
| R13A | B2 | B6 |
| R13B | B3 | B6 |
| R13C | B2 | B6 |
| R13D | B2 | B6 |
| R14A | C5 | A6 |
| R14B | C4 | A6 |
| R14C | C5 | A6 |
| R14D | C5 | A6 |
| R15 | C3 | A4 |
| R16 | D3 | A4 |
| R17 | D3 | A5 |
| R18 | G3 | B2 |
| R19A | F2 | A3 |
| R19B | F2 | A3 |
| R19C | F2 | A3 |
| R19D | F2 | A3 |
| R19E | F2 | A3 |
| R20A | F2 | B3 |
| R20B | F2 | B3 |
| R20C | F1 | B3 |
| R20D | F1 | B3 |
| R20E | F1 | B3 |
| R21A | F1 | A3 |
| R21B | F1 | A3 |
| R21C | F1 | A3 |
| R21D | F3 | A3 |
| R21E | F3 | A3 |
| R22 | B3 | A5 |
| R23 | C4 | A5 |
| R25 | C3 | B4 |
| R26 | B4 | B4 |
| R27 | B4 | B5 |
| R62 | F2 | B3 |

| CIRCUIT NUMBER | SCHEM LOCATION | BOARD LOCATION |
|---|---|---|
| U9A | C1 | B6 |
| U9B | C1 | B6 |
| U9C | C1 | B6 |
| U9D | C2 | B6 |
| U10A | C2 | B6 |
| U10B | C2 | B6 |
| U10C | C2 | B6 |
| U10D | C3 | B6 |
| U11A | C3 | C6 |
| U11B | E5 | C6 |
| U11C | E5 | C6 |
| U11D | E5 | C6 |
| U12A | C5 | A6 |
| U12B | C5 | A6 |
| U12C | C5 | A6 |
| U12D | C4 | A6 |
| U13A | C4 | A5 |
| U13B | C3 | A5 |
| U13C | E3 | A5 |
| U13D | D4 | A5 |
| U14 | D3 | B5 |
| U15 | F1 | B3 |
| U16 | E4 | A3 |
| U17 | G2 | A2 |
| U18 | G4 | A2 |
| U19 | B4 | B5 |
| U20 | E2 | B2 |

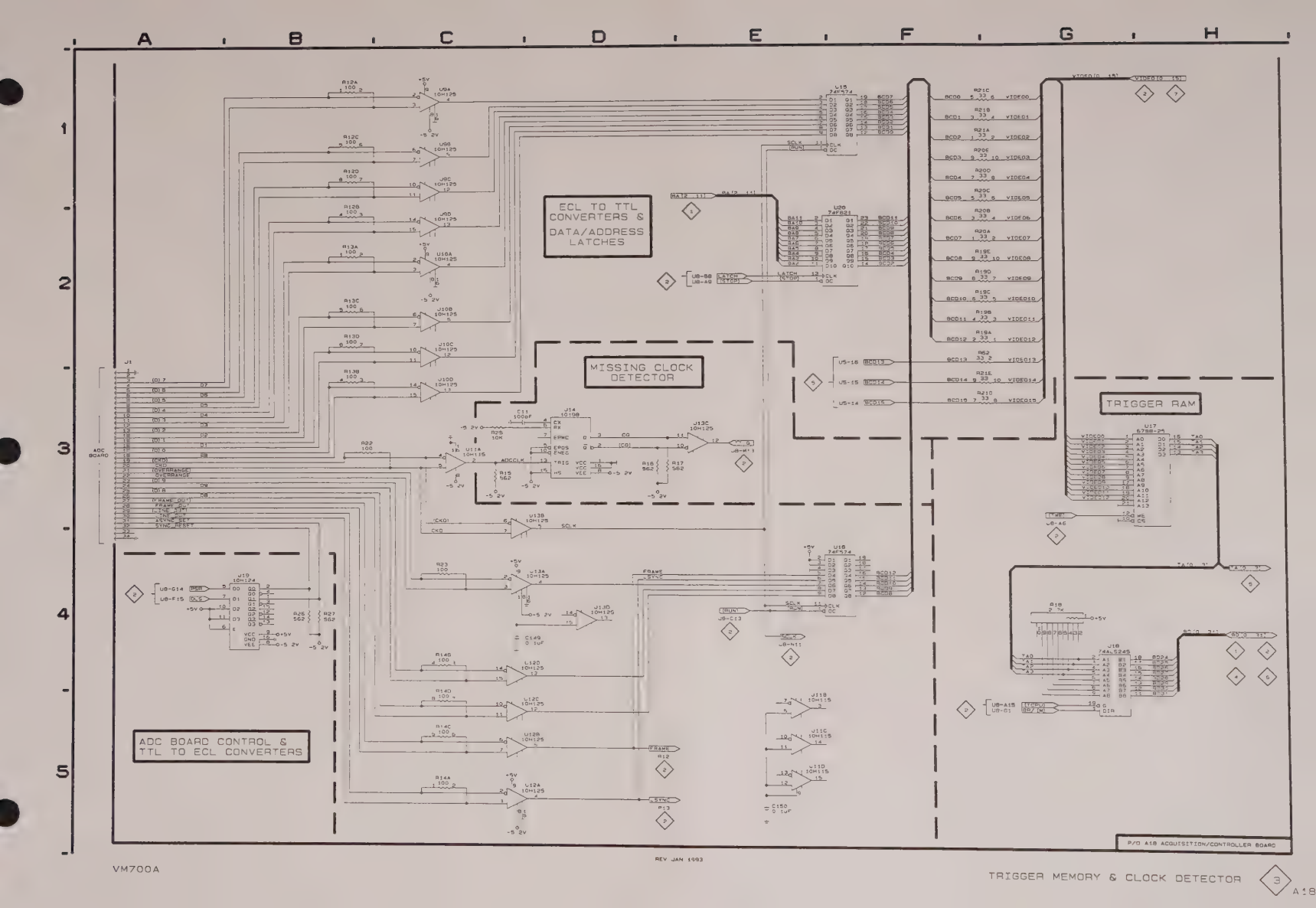


VM700A

REV JAN 1993

TRIGGER MEMORY & CLOCK DETECTOR 3 A18

## ACQUISITION/CONTROLLER BOARD
## Schematic <4> Look-Up Chart

**Assembly A18.** Partial Assembly A18 also shown on Schematics 1, 2, 3, 5, 6, 7, and 8.

| CIRCUIT NUMBER | SCHEM LOCATION | BOARD LOCATION |
|---|---|---|
| J2 | H2 | H7 |
| J3 | H4 | N7 |
| R28 | B1 | F5 |
| R29 | B2 | E5 |
| R30 | B3 | E5 |
| R31 | B4 | D5 |
| R32 | E2 | F6 |
| U22 | C2 | E5 |
| U23 | C2 | E5 |
| U24 | C3 | D5 |
| U25 | C4 | D5 |
| U26 | E2 | F6 |
| U27 | E4 | D6 |
| U40B | G2 | C5 |

TRIGGER MEMORY
& CLOCK DETECTOR <3>$_{A18}$

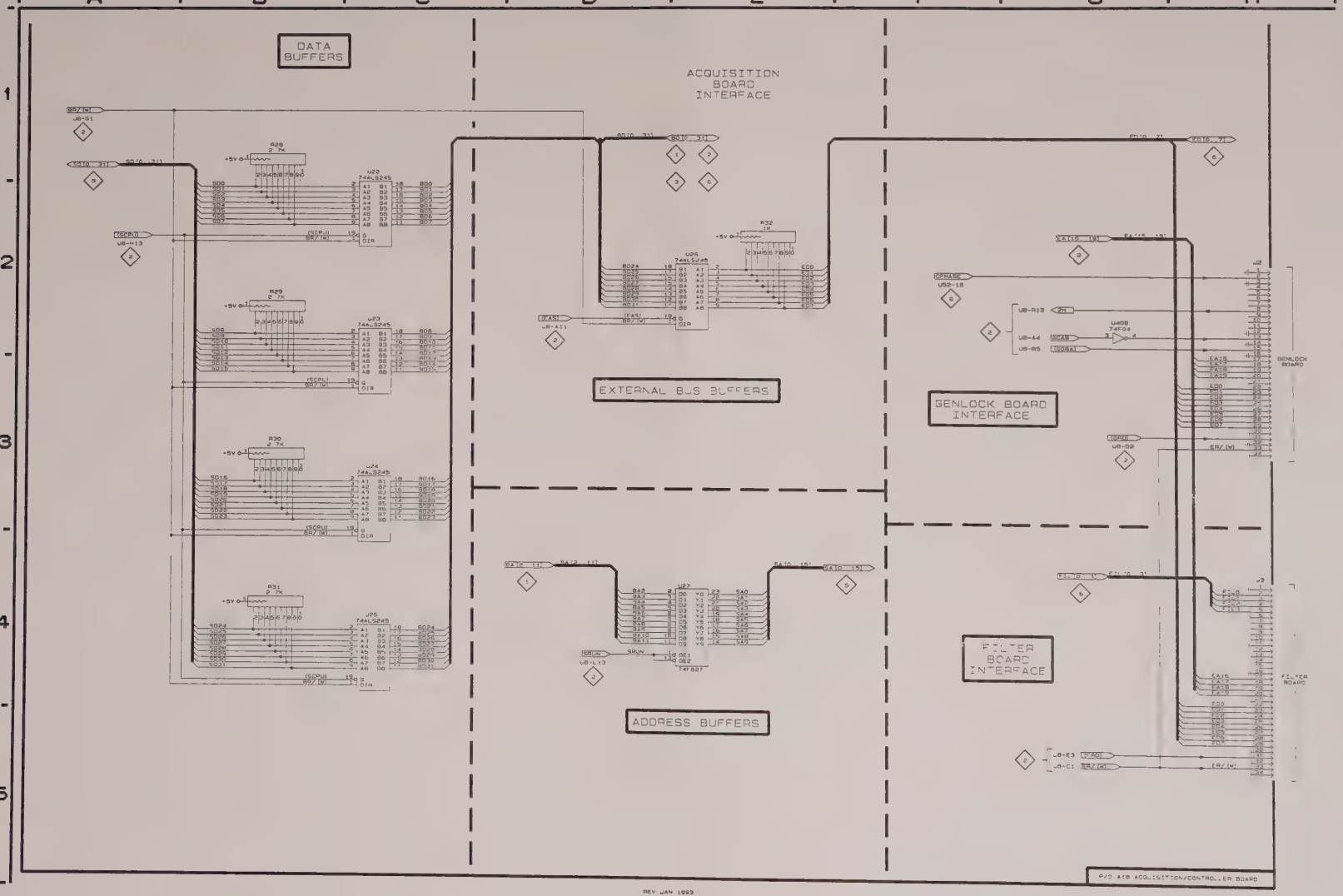


REV JAN 1993

VM700A

SEQUENCER CPU INTERFACE 4 A18

## ACQUISITION/CONTROLLER BOARD
## Schematic <5> Look-Up Chart

**Assembly A18.** Partial Assembly A18 also shown on Schematics 1, 2, 3, 4, 6, 7, and 8.

| CIRCUIT NUMBER | SCHEM LOCATION | BOARD LOCATION |
|---|---|---|
| C147 * | A1 | F1 |
| R33A | C2 | D6 |
| R33B | C2 | D6 |
| R33C | C2 | D6 |
| R33D | C2 | D6 |
| R33E | C3 | D6 |
| R34A | C2 | D6 |
| R34B | C2 | D6 |
| R34C | C2 | D6 |
| R34D | C3 | D6 |
| R34E | C3 | D6 |
| R60 | A1 | E2 |
| U28 | B2 | C2 |
| U29 | B2 | C4 |
| U30 | D2 | E2 |
| U31 | D2 | D2 |
| U32 | D3 | D2 |
| U33 | D4 | C2 |
| U34 | F4 | C3 |
| U35 | F3 | D3 |
| U36 | F2 | D3 |
| U37 | F2 | E3 |
| U38 | G2 | C6 |
| U39 | G2 | C5 |
| U40A | H3 | C5 |
| U40C | H3 | C5 |
| U40D | H3 | C5 |
| U40E | H3 | C5 |
| U40F | H3 | C5 |
| U41 | G4 | E2 |
| U42 | G4 | E4 |
| U43 | B4 | B3 |

* See parts list for serial number ranges.

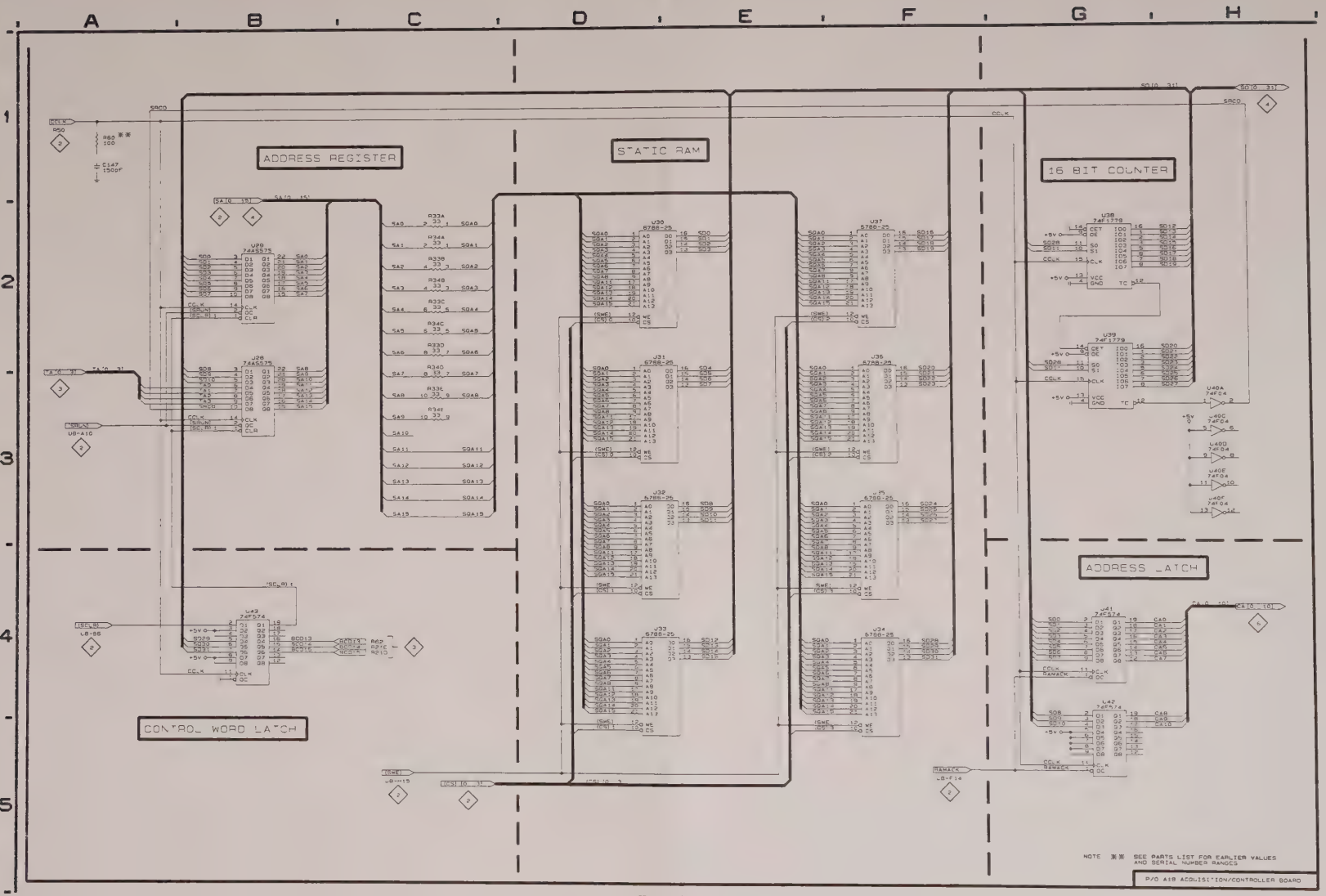
ADDRESS REGISTER
STATIC RAM
16 BIT COUNTER
ADDRESS LATCH
CONTROL WORD LATCH
NOTE *** SEE PARTS LIST FOR EARLIER VALUES AND SERIAL NUMBER RANGES
P/O A18 ACQUISITION/CONTROLLER BOARD

## ACQUISITION/CONTROLLER BOARD
## Schematic <6> Look-Up Chart

**Assembly A18.** Partial Assembly A18 also shown on Schematics 1, 2, 3, 4, 5, 7, and 8.

| CIRCUIT NUMBER | SCHEM LOCATION | BOARD LOCATION |
|---|---|---|
| C41 | F5 | C5 |
| C42 | F5 | B5 |
| C43 | F5 | B5 |
| C44 | G5 | A5 |
| C45 | G5 | B4 |
| C46 | G5 | B4 |
| C47 | H5 | A4 |
| C50 | A5 | A4 |
| C51 | B5 | E6 |
| C52 | B5 | G2 |
| C53 | B5 | P6 |
| C54 | B5 | I6 |
| C55 | C5 | G6 |
| C56 | C5 | H6 |
| C57 | C5 | I2 |
| C58 | D5 | N5 |
| C59 | D5 | N6 |
| C60 | D5 | O5 |
| C61 | E5 | O6 |
| C62 | E5 | P5 |
| C63 | E5 | P6 |
| C64 | E5 | J8 |
| C65 | F5 | J8 |
| C66 | F5 | I8 |
| C67 | F5 | I6 |
| C68 | G5 | H4 |
| C69 | G5 | H6 |
| C70 | G5 | G6 |
| C71 | H5 | G6 |
| C72 | A5 | F6 |
| C73 | B5 | G4 |
| C74 | B5 | G4 |
| C75 | B5 | F4 |
| C76 | B5 | F4 |
| C77 | C5 | E6 |
| C78 | C5 | E6 |
| C79 | C5 | D6 |
| C80 | D5 | D6 |
| C81 | D5 | E4 |
| C82 | D5 | E4 |
| C83 | E5 | D4 |
| C84 | E5 | E3 |
| C85 | E5 | E3 |
| C86 | E5 | D3 |
| C87 | F5 | C6 |
| C88 | F5 | C5 |
| C89 | F5 | C5 |
| C90 | G5 | B4 |
| C91 | G5 | B5 |
| C92 | G5 | B5 |
| C93 | H5 | A5 |
| C94 | A5 | D4 |
| C95 | B5 | C4 |
| C96 | B5 | C4 |
| C97 | B5 | B4 |
| C98 | B5 | B4 |
| C99 | C5 | A4 |
| C100 | C5 | D3 |
| C101 | C5 | C3 |
| C102 | D5 | C3 |
| C103 | D5 | B3 |
| C104 | D5 | A3 |
| C105 | E5 | A3 |
| J4 | H1 | L7 |
| R36A | C2 | E4 |
| R36B | C3 | E4 |
| R36C | C1 | E4 |
| R36D | C2 | E4 |
| R36E | C2 | E4 |
| R37A | C2 | E2 |
| R37B | C2 | E2 |
| R37C | C2 | E2 |
| R37D | C2 | E2 |
| R37E | C2 | E2 |
| R38 | E2 | H5 |
| R39 | E2 | H5 |
| R40 | E3 | G5 |
| R41 | E4 | F5 |
| U44 | D1 | G4 |
| U45 | D2 | G4 |
| U46 | D3 | F4 |
| U47 | D3 | F4 |
| U48 | E4 | F5 |
| U49 | E3 | G5 |
| U50 | E2 | G5 |
| U51 | E2 | H5 |
| U52 | F4 | G6 |
| U53 | F3 | I5 |
| U54 | F2 | J7 |
| U55 | F1 | I7 |
| U56 | F2 | J7 |
| U57 | B2 | H4 |

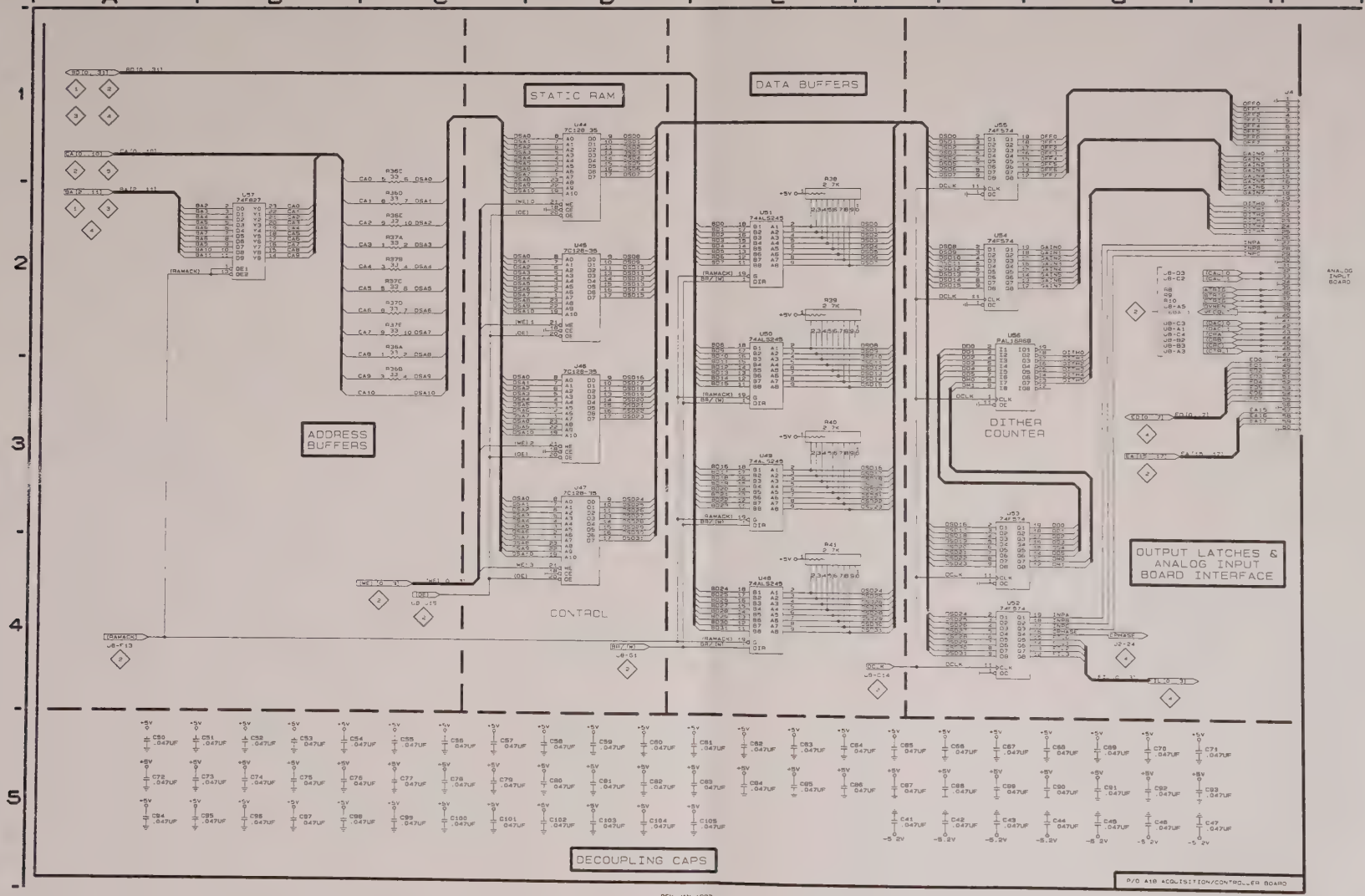


VM700A

REV JAN 1993

DYNAMIC SETTINGS GENERATOR 6 A18

## ACQUISITION/CONTROLLER BOARD
## Schematic <7> Look-Up Chart

**Assembly A18.** Partial Assembly A18 also shown on Schematics 1, 2, 3, 4, 5, 6, and 8.

| CIRCUIT NUMBER | SCHEM LOCATION | BOARD LOCATION |
|---|---|---|
| C107 | E3 | L4 |
| C112 | A3 | K5 |
| C113 | A3 | J5 |
| C114 | D3 | O1 |
| C115 | D2 | L1 |
| C116 | D2 | P1 |
| C117 | D3 | M1 |
| C118 | H5 | J1 |
| C119 | H5 | L3 |
| C120 | H5 | L5 |
| C121 | G2 | F2 |
| C122 | G3 | H2 |
| C123 | E5 | I4 |
| C124 | H5 | I3 |
| C144 | C5 | K3 |
| C145 | D5 | N1 |
| DL62 | A3 | K4 |
| R43 | A2 | L2 |
| R45 | E3 | L4 |
| R48 | A3 | K4 |
| R52 | F4 | H3 |
| R53 | D4 | N1 |
| R54A | H1 | G2 |
| R54B | H1 | G2 |
| R54C | H1 | G2 |
| R54D | H1 | G2 |
| R54E | H2 | G2 |
| R55A | H2 | G2 |
| R55B | H2 | G2 |
| R55C | H2 | G2 |
| R55D | H2 | G2 |
| R55E | H2 | G2 |
| R56A | H2 | G2 |
| R56B | H2 | G2 |
| R56C | H3 | G2 |
| R56D | H3 | G2 |
| R57A | H3 | I2 |
| R57B | H3 | I2 |
| R57C | H3 | I2 |
| R57D | H3 | I2 |
| R58A | H4 | I2 |
| R58B | H4 | I2 |
| R58C | H4 | I2 |
| R58D | H3 | I2 |
| R58E | H3 | I2 |
| R59A | H4 | I2 |
| R59B | H4 | I2 |
| R59C | H4 | I2 |
| R59D | H4 | I2 |
| R59E | H4 | I2 |
| U58 | C2 | K2 |
| U59 | G1 | F2 |
| U60 | D4 | I4 |
| U61 | G4 | J3 |
| U63 | A1 | I2 |
| U64 | D3 | N2 |
| U65 | D2 | K2 |
| U66 | D2 | L2 |
| U67 | D1 | O2 |
| U68 | E2 | L2 |
| U69 | E2 | L4 |
| U70 | G3 | H2 |
| Y1 | A2 | J4 |

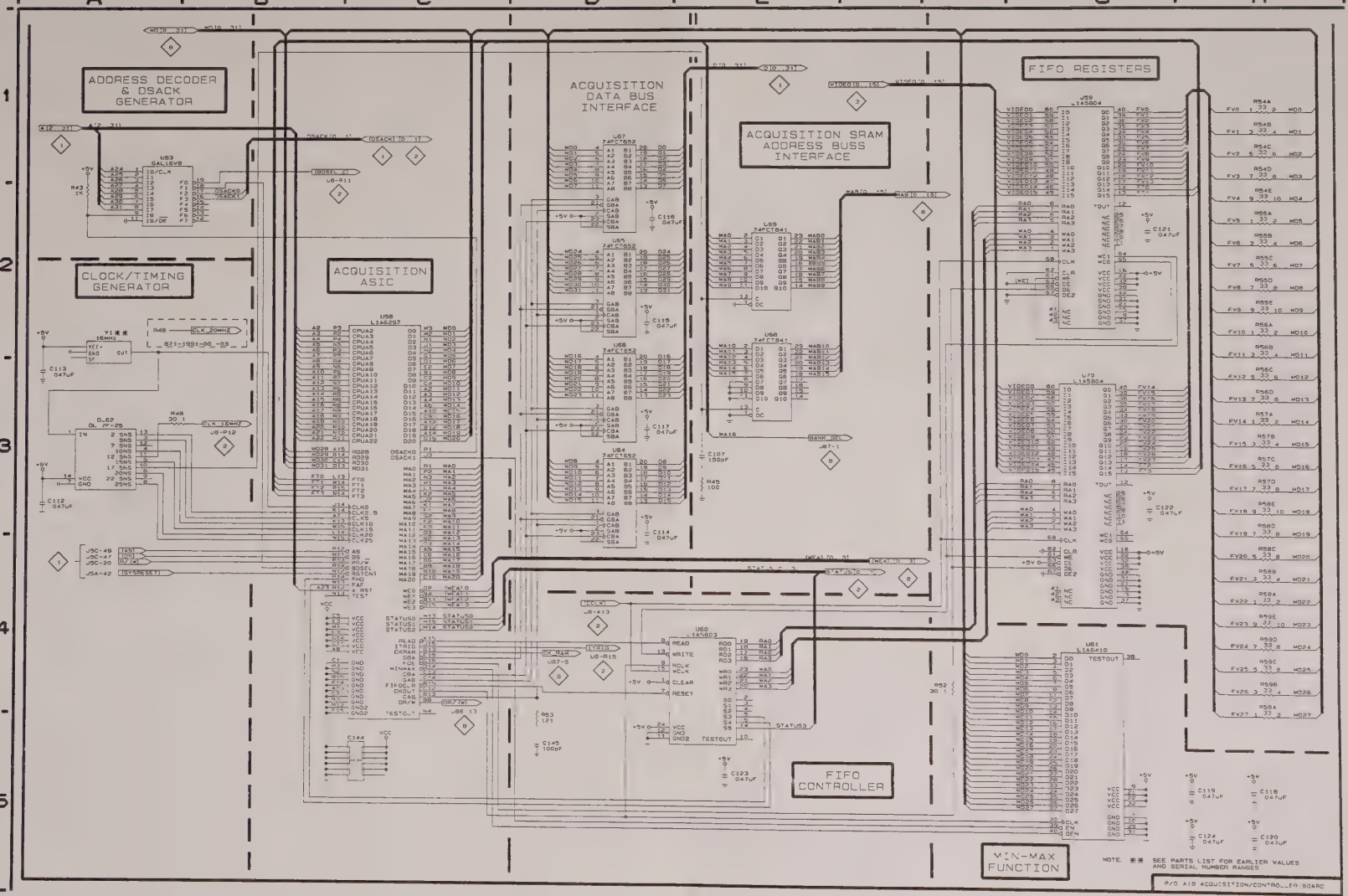


VM700A

REV JAN 1993

ACQUISITION CPU INTEFACE, FIFO, MINMAX

A18

## ACQUISITION/CONTROLLER BOARD
## Schematic <8> Look-Up Chart

**Assembly A18.** Partial Assembly A18 also shown on Schematics 1, 2, 3, 4, 5, 6, and 7.

| CIRCUIT NUMBER | SCHEM LOCATION | BOARD LOCATION |
|---|---|---|
| C125 | B2 | L5 |
| C126 | B5 | P3 |
| C127 | B5 | O3 |
| C128 | B5 | O3 |
| C129 | C5 | N3 |
| C130 | C5 | N3 |
| C131 | C5 | N3 |
| C132 | D5 | M3 |
| C133 | D5 | M3 |
| C134 | D5 | P5 |
| C135 | E5 | O5 |
| C136 | E5 | O5 |
| C137 | E5 | N5 |
| C138 | F5 | N5 |
| C139 | F5 | N5 |
| C140 | F5 | M5 |
| C141 | G5 | M5 |
| C142 | G5 | M2 |
| C148 | A2 | L4 |
| R47 | G5 | M2 |
| R61 | A2 | L4 |
| RC1 | C1 | P3 |
| RC2 | C1 | P2 |
| RC3 | C3 | P4 |
| RC4 | C3 | P4 |
| U71 | D1 | P2 |
| U72 | E1 | O2 |
| U73 | F1 | O2 |
| U74 | G1 | N2 |
| U75 | D2 | N2 |
| U76 | E2 | N2 |
| U77 | F2 | M2 |
| U78 | G2 | M2 |
| U79 | D3 | P4 |
| U80 | E3 | O4 |
| U81 | F3 | O4 |
| U82 | G3 | N4 |
| U83 | D4 | N4 |
| U84 | E4 | N4 |
| U85 | F4 | M4 |
| U86 | G4 | M4 |
| U87 | B2 | L4 |

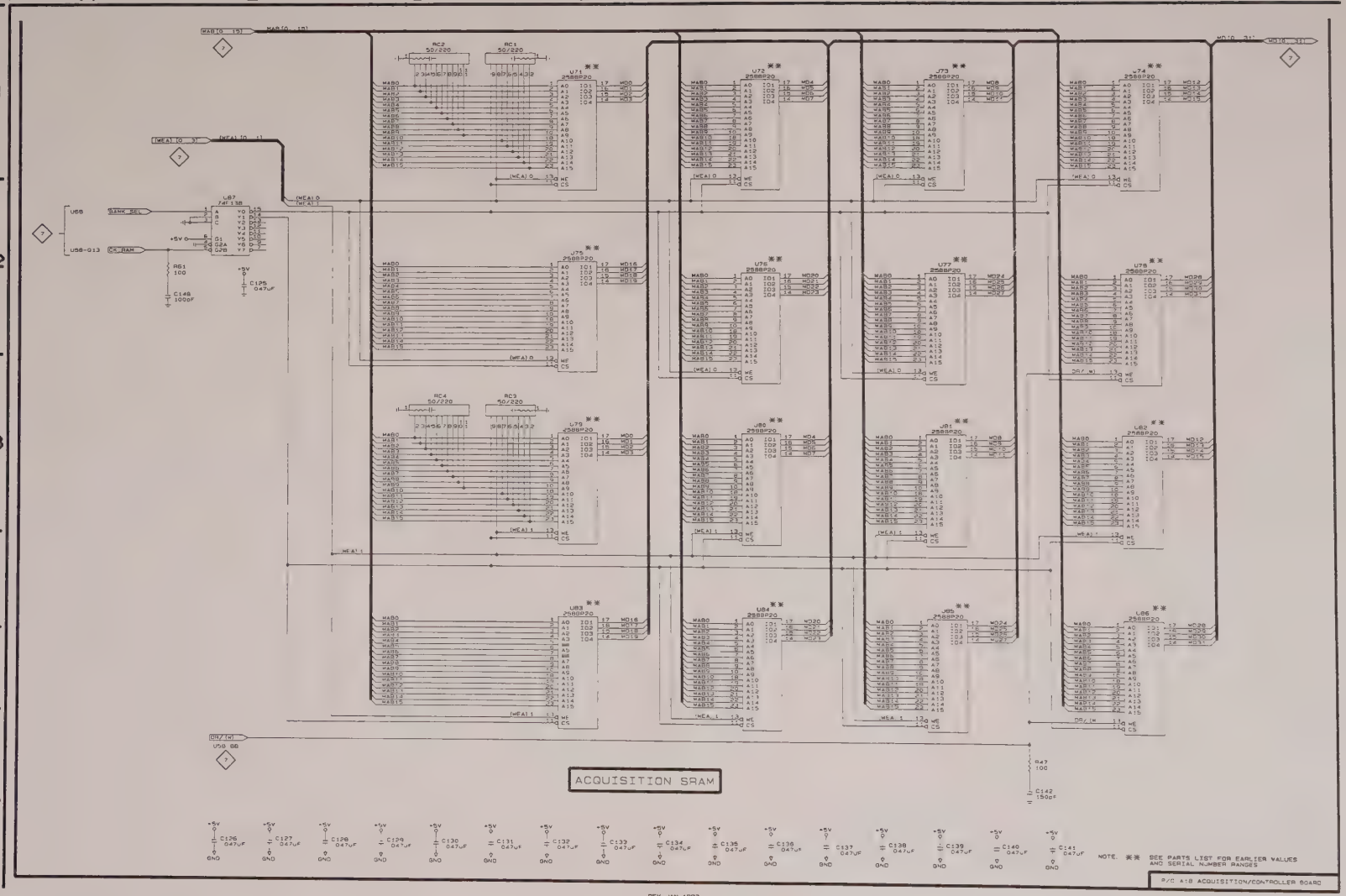
ACQUISITION SRAM
NOTE. ** SEE PARTS LIST FOR EARLIER VALUES AND SERIAL NUMBER RANGES
P/C A18 ACQUISITION/CONTROLLER BOARD

ACQUISITION SRAM
(512K BYTES) $<8>_{A18}$

| CKT NO. | SCHEM LOC | SCHEM NO. | BD LOC |
|---|---|---|---|
| C1 | B1 | 1 | A3 |
| C2 | C1 | 1 | B5 |
| C3 | C1 | 1 | D3 |
| C4 | C1 | 1 | D5 |
| C5 | D1 | 1 | C3 |
| C6 | D1 | 1 | C2 |
| C7 | D1 | 1 | C2 |
| C8 | D1 | 1 | C1 |
| C9 | D1 | 1 | C1 |
| C10 | D1 | 1 | E2 |
| C11 | C2 | 1 | F6 |
| C16 | D2 | 1 | G6 |
| C23 | E1 | 1 | G2 |
| C24 | E2 | 1 | G2 |
| C25 | F1 | 1 | K2 |
| C26 | G1 | 1 | J4 |
| C27 | G1 | 1 | J4 |
| C28 | G1 | 1 | J4 |
| C30 | H1 | 1 | I5 |
| C31 | H1 | 1 | K5 |
| C32 | F2 | 1 | L2 |
| C33 | G2 | 1 | L3 |
| C34 | G2 | 1 | K3 |
| C35 | G2 | 1 | L3 |
| C36 | G2 | 1 | L3 |
| C37 | E4 | 1 | F5 |
| C38 | B3 | 1 | H5 |
| C39 | A4 | 1 | G5 |
| C40 | A4 | 1 | G5 |
| C41 | A4 | 1 | G4 |
| C42 | A4 | 1 | H5 |
| C43 | B5 | 1 | G4 |
| C44 | C4 | 1 | H3 |
| C45 | D4 | 1 | F4 |
| C46 | D4 | 1 | G4 |
| C49 | G3 | 1 | M4 |
| C51 | H3 | 1 | N3 |
| C52 | E2 | 2 | P6 |
| C53 | D2 | 2 | P5 |
| C54 | G2 | 1 | N1 |
| C56 | G2 | 1 | N2 |
| C57 | F4 | 1 | N4 |
| C58 | G4 | 1 | N5 |
| C59 | G5 | 1 | O5 |
| C60 | H4 | 1 | L4 |
| C61 | G4 | 1 | L5 |
| C62 | G4 | 1 | M5 |
| C64 | D4 | 1 | P4 |
| C74 | A5 | 1 | P2 |
| C75 | B2 | 1 | P2 |
| C76 | B3 | 2 | P2 |
| C81 | C4 | 2 | O4 |
| C82 | D3 | 2 | N3 |
| C83 | D3 | 2 | N3 |
| C84 | C3 | 2 | N3 |
| C85 | E5 | 2 | O2 |
| C86 | E5 | 2 | O4 |
| C87 | H5 | 1 | M4 |
| C88 | F1 | 2 | N5 |
| C89 | F1 | 2 | N6 |
| C90 | G2 | 2 | N5 |
| C91 | H1 | 1 | L6 |
| C92 | E1 | 2 | P5 |
| C125 | D5 | 2 | O3 |
| C147 | E4 | 1 | P6 |
| C150 | C3 | 2 | O2 |
| C151 | C2 | 2 | O2 |
| C157 ** | F4 | 2 | O3 |
| C158 ** | F4 | 2 | P3 |
| C185 | C4 | 2 | N2 |
| C201 | G4 | 1 | O4 |
| C290 | A1 | 1 | A3 |
| C291 | A1 | 1 | A1 |
| C292 | B1 | 1 | A4 |
| C293 | B1 | 1 | A4 |
| C420 | A5 | 1 | G5 |
| C470 | A4 | 1 | G5 |
| C570 | G4 | 1 | N4 |
| C640 | G3 | 1 | O1 |
| C900 | F1 | 2 | M5 |
| CR1 | C1 | 1 | B5 |
| CR2 | C2 | 1 | F5 |
| CR3 | C2 | 1 | F5 |
| CR4 | D2 | 1 | G6 |
| CR5 | D2 | 1 | G6 |
| CR6 | C2 | 1 | F5 |
| CR7 | C2 | 1 | F5 |
| CR9 | E1 | 1 | F2 |
| CR10 | E1 | 1 | G1 |
| CR12 | E2 | 1 | F1 |
| CR14 | G1 | 1 | J1 |
| CR15 | G1 | 1 | L1 |
| CR16 | G1 | 1 | L1 |
| CR17 | A5 | 1 | H6 |
| CR22 | D2 | 1 | E1 |
| CR26 | D3 | 1 | E1 |
| CR27 | E3 | 1 | F4 |
| CR28 | E3 | 1 | F4 |
| CR29 | E4 | 1 | F4 |
| CR30 | E4 | 1 | F4 |
| CR31 | B4 | 1 | G4 |
| CR32 | B4 | 1 | G4 |
| CR33 | F2 | 1 | M1 |
| CR35 | G2 | 1 | L2 |
| CR36 | G2 | 1 | L2 |
| CR37 | G2 | 1 | L2 |
| CR38 | G2 | 1 | M2 |
| CR46 | D4 | 2 | O4 |
| CR47 | D3 | 2 | O3 |
| CR48 | A5 | 2 | O4 |
| CR49 | D4 | 2 | O2 |
| CR50 | D5 | 2 | O2 |
| CR51 | E1 | 2 | O5 |
| CR52 | E2 | 2 | P6 |
| CR53 | E1 | 2 | P5 |
| CR54 | G1 | 2 | M6 |
| CR56 | G1 | 2 | M6 |
| CR84 | B4 | 2 | N3 |
| CR88 | B4 | 2 | O2 |
| CR89 | E5 | 2 | O3 |
| CR151 | C2 | 2 | O2 |
| CR201 | B5 | 2 | O5 |
| CR202 | H3 | 1 | M4 |
| CR258 | G5 | 2 | P3 |
| CR259 | G5 | 2 | P3 |
| CR260 | H3 | 1 | M3 |
| CR261 | H5 | 1 | M4 |
| CR262 | H4 | 1 | L4 |
| CR640 | G3 | 1 | N2 |
| DS1 | C1 | 1 | C2 |
| DS2 | A2 | 2 | O1 |
| DS3 | A2 | 2 | O1 |
| DS4 | A3 | 2 | O1 |
| DS5 | A4 | 2 | P1 |
| DS6 | A4 | 2 | O1 |
| DS7 | F4 | 2 | P1 |
| DS8 | F3 | 2 | P1 |
| DS9 | F5 | 2 | P1 |
| DS10 | F3 | 2 | P1 |
| DS11 | F2 | 2 | N1 |
| E3 | B1 | 1 | C4 |
| F1 | A1 | 1 | |
| F3 | B2 | 1 | F5 |
| F4 | B2 | 1 | F6 |
| FL1 | A1 | 1 | B1 |
| J1 | H3 | 2 | Q3 |
| J2 | H4 | 1 | M6 |
| J3 | H3 | 1 | M6 |
| J4 | H1 | 1 | I6 |
| J5 | H1 | 2 | M6 |
| J7 | A1 | 1 | B2 |
| J10 | A5 | 1 | H6 |
| J12 | F1 | 2 | O6 |
| J13 | D1 | 1 | D1 |
| L2 | D1 | 1 | C1 |
| L3 | E2 | 1 | E2 |
| L4 | G1 | 1 | I4 |
| L5 | G1 | 1 | I4 |
| L6 | G1 | 1 | K3 |
| L8 | G2 | 1 | M1 |
| L10 | G2 | 1 | L2 |
| L12 | G2 | 1 | L3 |
| L13 | G1 | 1 | M5 |
| P7 | A1 | 1 | |
| P10 | A5 | 1 | |
| P12 | F1 | 2 | |
| P13 | D1 | 1 | |
| Q2 | F1 | 1 | G1 |
| Q3 | F2 | 1 | F1 |
| Q8 | E2 | 1 | E1 |
| Q10 | E2 | 1 | E1 |
| Q11 | E4 | 1 | F4 |
| Q12 | E4 | 1 | E4 |
| Q13 | A4 | 1 | F5 |
| Q16 | G3 | 1 | N2 |
| Q17 | G4 | 1 | K4 |
| Q18 | H4 | 1 | L4 |
| Q19 | G5 | 1 | L4 |
| Q20 | H5 | 1 | M4 |
| Q23 | E5 | 2 | O4 |
| Q24 | G1 | 2 | M5 |
| Q25 | F4 | 2 | O3 |
| Q26 | F4 | 2 | P3 |
| Q27 | H5 | 2 | P3 |
| Q130 | H1 | 1 | K6 |
| Q560 | H3 | 1 | M3 |
| R1 | A1 | 1 | B2 |
| R2 | B1 | 1 | B3 |
| R5 | C1 | 1 | D4 |
| R6 | C1 | 1 | C2 |
| R8 | D1 | 1 | D1 |
| R9 | D1 | 1 | B1 |
| R18 | A4 | 1 | G5 |
| R20 | E1 | 1 | G1 |
| R21 | E2 | 1 | F1 |
| R22 | F1 | 1 | K2 |
| R23 | F2 | 1 | K2 |
| R27 | G1 | 1 | I4 |
| R28 | G1 | 1 | K4 |
| R33 | D2 | 1 | E1 |
| R34 | D2 | 1 | E1 |
| R35 | E4 | 1 | F4 |
| R36 | E4 | 1 | F4 |
| R37 | E4 | 1 | F4 |
| R38 | A4 | 1 | H6 |
| R39 | A4 | 1 | G5 |
| R40 | A4 | 1 | H5 |
| R41 | A5 | 1 | H5 |
| R42 | A5 | 1 | H5 |
| R43 | A5 | 1 | H5 |
| R45 | A4 | 1 | G5 |
| R46 | A4 | 1 | G4 |
| R47 | A4 | 1 | F5 |
| R48 | A4 | 1 | F4 |
| R49 | A4 | 1 | F4 |
| R50 | A4 | 1 | H5 |
| R52 | A5 | 1 | H5 |
| R53 | B4 | 1 | H4 |
| R54 | B4 | 1 | H5 |
| R55 | C3 | 1 | H5 |
| R56 | D4 | 1 | G4 |
| R57 | D4 | 1 | G4 |
| R61 | G2 | 1 | M2 |
| R63 | G2 | 1 | M2 |
| R64 | F3 | 1 | N2 |
| R65 | F3 | 1 | N2 |
| R67 | H3 | 1 | M3 |
| R69 | F4 | 1 | N5 |
| R70 | F4 | 1 | N5 |
| R71 | F4 | 1 | O4 |
| R72 | F4 | 1 | O4 |
| R73 | F4 | 1 | N4 |
| R74 | F5 | 1 | N4 |
| R75 | F5 | 1 | O5 |
| R76 | F5 | 1 | O5 |
| R77 | F5 | 1 | O5 |
| R78 | G4 | 1 | L4 |
| R79 | G3 | 1 | L3 |
| R80 | H4 | 1 | L4 |
| R81 | G5 | 1 | L5 |
| R82 | G5 | 1 | M3 |
| R83 | H5 | 1 | M4 |
| R84 | B4 | 2 | O3 |
| R85 | C4 | 2 | O3 |
| R86 | B5 | 2 | O3 |
| R87 | C5 | 2 | O3 |
| R88 | B4 | 2 | O2 |
| R89 | E5 | 2 | O3 |
| R90 | F5 | 2 | O3 |
| R94 | A2 | 2 | P1 |
| R95 | A2 | 2 | P1 |
| R96 | A3 | 2 | P1 |
| R97 | A2 | 2 | Q2 |
| R98 | A2 | 2 | Q2 |
| R99 | A2 | 2 | Q2 |
| R100 | A2 | 2 | Q2 |
| R101 | A3 | 2 | Q2 |
| R102 | A3 | 2 | Q2 |
| R103 | A4 | 2 | P1 |
| R104 | A3 | 2 | P1 |
| R105 | A3 | 2 | Q2 |
| R106 | A4 | 2 | Q2 |
| R107 | B3 | 2 | Q2 |
| R108 | A4 | 2 | P2 |
| R109 | A4 | 2 | P2 |
| R110 | B3 | 2 | P2 |
| R111 | B3 | 2 | P2 |
| R112 | B2 | 2 | Q3 |
| R113 | B2 | 2 | Q3 |
| R114 | C3 | 2 | P3 |
| R121 | C3 | 2 | O3 |
| R122 | C4 | 2 | O4 |
| R123 | C4 | 2 | O4 |
| R124 | C4 | 2 | O4 |
| R125 | D3 | 2 | O3 |
| R126 | C3 | 2 | N4 |
| R127 | C3 | 2 | N4 |
| R128 | C3 | 2 | N4 |
| R129 | C3 | 2 | N4 |
| R132 | D5 | 2 | O4 |
| R134 | E5 | 2 | O4 |
| R135 | F3 | 2 | P3 |
| R136 | D1 | 2 | O5 |
| R137 | E2 | 2 | P6 |
| R138 | D1 | 2 | P5 |
| R139 | E1 | 2 | P5 |
| R140 | E1 | 2 | O6 |
| R141 | F1 | 2 | O6 |
| R142 | F1 | 2 | O6 |
| R143 | F1 | 2 | O5 |
| R144 | F1 | 2 | O5 |
| R145 | E3 | 2 | P5 |
| R146 | E3 | 2 | P6 |
| R147 | E3 | 2 | O6 |
| R150 | G1 | 2 | O5 |
| R151 | F1 | 2 | N5 |
| R152 | F1 | 2 | N5 |
| R153 | G1 | 2 | N6 |
| R154 | G1 | 2 | N5 |
| R155 | G2 | 2 | M6 |
| R156 | F4 | 2 | P3 |
| R157 | F4 | 2 | P4 |
| R158 | F4 | 2 | P3 |
| R159 | F4 | 2 | P4 |
| R160 | F4 | 2 | P3 |
| R161 | F5 | 2 | P1 |
| R162 | F3 | 2 | P1 |
| R163 | F5 | 2 | P1 |
| R164 | F3 | 2 | P1 |
| R165 | G3 | 2 | P3 |
| R166 | H5 | 2 | P3 |
| R167 | E3 | 2 | P5 |
| R168 | F2 | 2 | O1 |
| R169 | A5 | 1 | H5 |
| R201 | G4 | 2 | O4 |
| R230 | H1 | 1 | K6 |
| R258 | G5 | 2 | P3 |
| R260 | B2 | 2 | O2 |
| R261 | C2 | 2 | Q3 |
| R262 | G3 | 2 | Q3 |
| R420 | A5 | 1 | H5 |
| R640 | F3 | 1 | N3 |
| R641 | G3 | 1 | N2 |
| R642 | G3 | 1 | N2 |
| R643 | E1 | 1 | F2 |
| R644 | H3 | 1 | M3 |
| R645 | H2 | 1 | M3 |
| R646 | H5 | 1 | L4 |
| R647 | H5 | 1 | L4 |
| R648 | H4 | 1 | L4 |
| R649 | H3 | 1 | L4 |
| R650 | G1 | 2 | N6 |
| R651 | G3 | 1 | N2 |
| R652 | G4 | 1 | L4 |
| R653 | G5 | 1 | L5 |
| RT1 | B1 | 1 | B4 |
| RT5 | D1 | 2 | L1 |
| RV1 | B1 | 1 | B4 |
| RV2 | B1 | 1 | B4 |
| S1 | A1 | 1 | B3 |
| S2 | B1 | 1 | A5 |
| T1 | B2 | 1 | E5 |
| T2 | F1 | 1 | H1 |
| T3 | D4 | 1 | F4 |
| T4 | D2 | 1 | D4 |
| T5 | D3 | 1 | F4 |
| TP2 | D2 | 1 | H6 |
| TP3 | H1 | 1 | J4 |
| TP4 | H4 | 1 | K6 |
| TP5 | H4 | 1 | L6 |
| TP6 | H3 | 2 | O4 |
| TP10 | F2 | 2 | O0 |
| TP11 | A2 | 2 | O0 |
| TP12 | A2 | 2 | O0 |
| TP13 | A3 | 2 | O0 |
| TP14 | A3 | 2 | P0 |
| TP15 | A4 | 2 | O0 |
| TP16 | G3 | 2 | O0 |
| TP17 | G5 | 2 | O0 |
| TP18 | G4 | 2 | O0 |
| TP19 | G5 | 2 | P0 |
| TP20 | G2 | 1 | K3 |
| TP21 | H3 | 1 | M3 |
| TP22 | H4 | 1 | K6 |
| U2 | C2 | 1 | G5 |
| U5 | E4 | 1 | N4 |
| U6A | F4 | 1 | N5 |
| U6B | F5 | 1 | N5 |
| U7A | B4 | 1 | H4 |
| U7B | B5 | 1 | H4 |
| U8 | B4 | 1 | G4 |
| U10A | C4 | 1 | H4 |
| U11 | C4 | 1 | G4 |
| U12A | F3 | 1 | O2 |
| U12B | F3 | 1 | O2 |
| U16 | B2 | 2 | P2 |
| U20A | E5 | 2 | O3 |
| U20B | C2 | 2 | O3 |
| U21A | D3 | 2 | N3 |
| U21B | D4 | 2 | N3 |
| U22A | E3 | 2 | P5 |
| U22B | E3 | 2 | P5 |
| U24A | E1 | 2 | O5 |
| U24B | E1 | 2 | O5 |
| U25 | F1 | 2 | N5 |
| U26A | E4 | 2 | P4 |
| U26B | H4 | 2 | P4 |
| U26C | G5 | 2 | P4 |
| U28A | F5 | 2 | O4 |
| U28B | E4 | 2 | O4 |
| U28C | E4 | 2 | O4 |
| U28D | G4 | 2 | O4 |
| U28E | G3 | 2 | O4 |
| U28F | E4 | 2 | O4 |
| U30A | D4 | 2 | N2 |
| U30B | D5 | 2 | N2 |
| VR2 | C4 | 2 | O4 |
| VR3 | C3 | 2 | N4 |
| VR130 | H1 | 1 | K5 |
| W20 ** | A1 | 1 | B2 |
| W21 ** | A1 | 1 | B1 |

** See Parts List for earlier serial number ranges.

## A15 POWER SUPPLY BOARD LOOKUP CHART

Use the circuit board lookup table, at left, for schematic <1>

**ASSEMBLY A15.** *Partial Assembly A15 also shown on Schematic 2.*

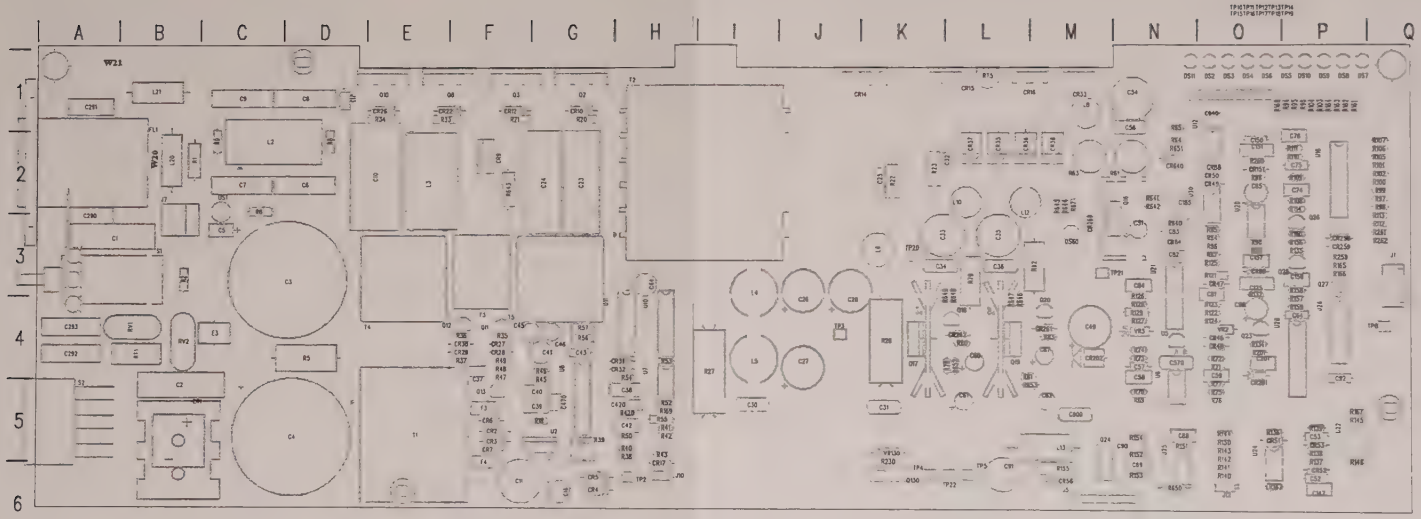


**A15 POWER SUPPLY BOARD**

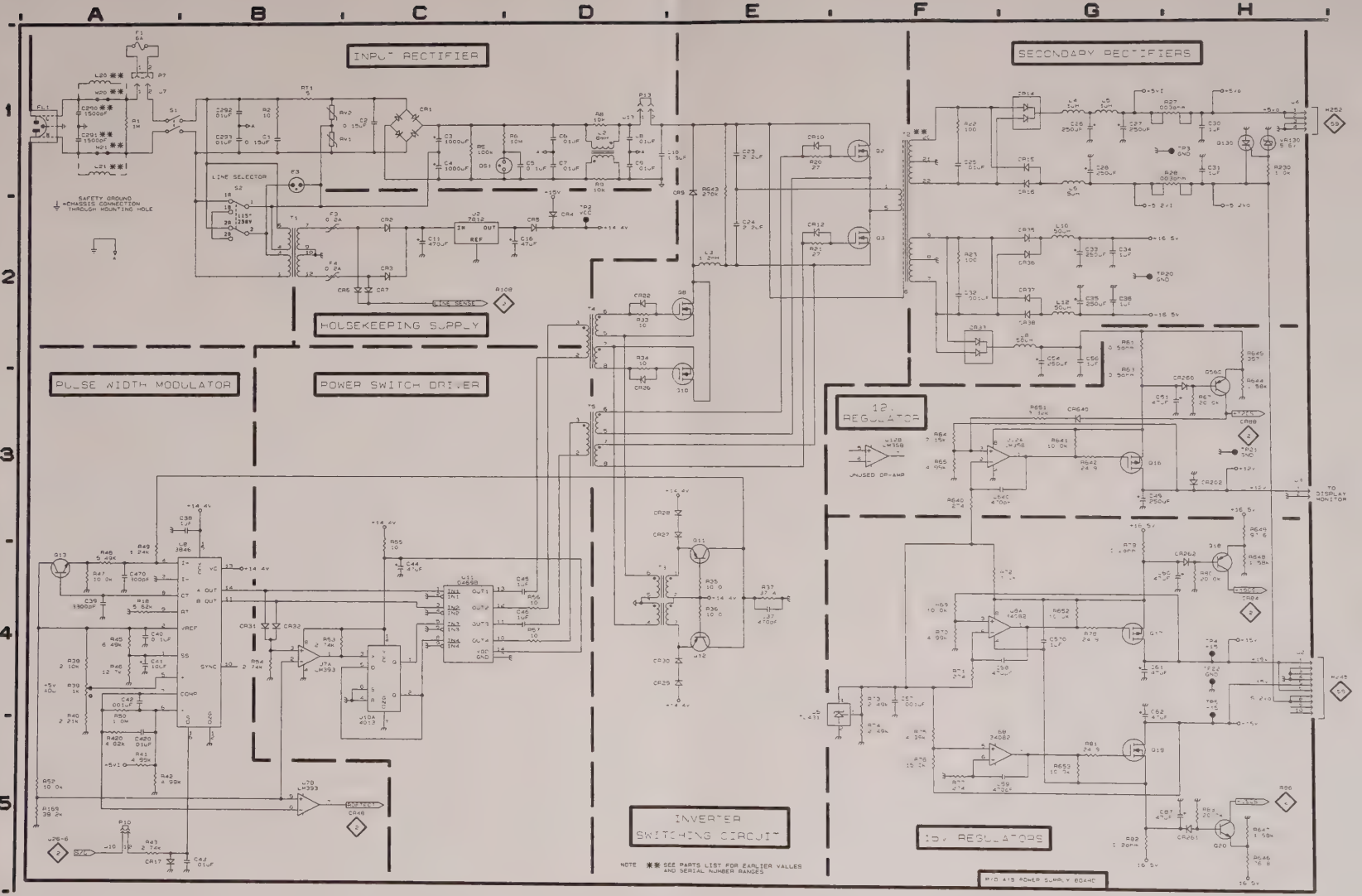


VM700A

REV MAY 1993

INPUT INVERTER AND REGULATORS 415 1

## SCHEMATIC DIAGRAM A15<2>
## POWER SUPPLY BOARD

The schematic diagram has an alphanumeric grid to assist in locating parts within that diagram.

**ASSEMBLY A15.** *Partial Assembly A15 also shown on Schematic 1.*

| CIRCUIT NUMBER | SCHEM LOCATION | BOARD LOCATION |
|---|---|---|
| C52 | E2 | P6 |
| C53 | D2 | P5 |
| C64 | D4 | P4 |
| C74 | A5 | P2 |
| C75 | B2 | P2 |
| C76 | B3 | P2 |
| C81 | C4 | O4 |
| C82 | D3 | N3 |
| C83 | D3 | N3 |
| C84 | C3 | N3 |
| C85 | E5 | O2 |
| C86 | E5 | O4 |
| C88 | F1 | N5 |
| C89 | F1 | N6 |
| C90 | G2 | N5 |
| C91 | H1 | L6 |
| C92 | E1 | P5 |
| C125 | D5 | O3 |
| C147 | E4 | P6 |
| C150 | C3 | O2 |
| C151 | C2 | O2 |
| C157 | F4 | O3 |
| C158 | F4 | P3 |
| C185 | C4 | N2 |
| C201 | G4 | O4 |
| C900 | F1 | M5 |
| CR46 | D4 | O4 |
| CR47 | D3 | O3 |
| CR48 | A5 | O4 |
| CR49 | D4 | O2 |
| CR50 | D5 | O2 |
| CR51 | E1 | O5 |
| CR52 | E2 | P6 |
| CR53 | E1 | P5 |
| CR56 | G1 | M6 |
| CR84 | B4 | N3 |
| CR88 | B4 | O2 |
| CR89 | E5 | O3 |
| CR151 | C2 | O2 |
| CR201 | B5 | O5 |
| CR258 | G5 | P3 |
| CR259 | G5 | P3 |
| DS2 | A2 | O1 |
| DS3 | A2 | O1 |
| DS4 | A3 | O1 |
| DS5 | A4 | P1 |
| DS6 | A4 | O1 |
| DS7 | F4 | P1 |
| DS8 | F3 | P1 |
| DS9 | F5 | P1 |
| DS10 | F3 | P1 |
| DS11 | F2 | N1 |
| J1 | H3 | Q3 |
| J5 | H1 | M6 |
| J12 | F1 | O6 |
| L13 | G1 | M5 |
| P12 | F1 | |
| Q23 | E5 | O4 |
| Q24 | G1 | M5 |
| Q25 | F4 | O3 |
| Q26 | F4 | P3 |
| Q27 | H5 | P3 |
| R84 | B4 | O3 |
| R85 | C4 | O3 |
| R86 | B5 | O3 |
| R87 | C5 | O3 |
| R88 | B4 | O2 |
| R89 | E5 | O3 |
| R90 | F5 | O3 |
| R94 | A2 | P1 |
| R95 | A2 | P1 |
| R96 | A3 | P1 |
| R97 | A2 | Q2 |
| R98 | A2 | Q2 |
| R99 | A2 | Q2 |
| R100 | A2 | Q2 |
| R101 | A3 | Q2 |
| R102 | A3 | Q2 |
| R103 | A4 | P1 |
| R104 | A3 | P1 |
| R105 | A3 | Q2 |
| R106 | A4 | Q2 |
| R107 | B3 | Q2 |
| R108 | A4 | P2 |
| R109 | A4 | P2 |
| R110 | B3 | P2 |
| R111 | B3 | P2 |
| R112 | B2 | Q3 |
| R113 | B2 | Q3 |
| R114 | C3 | P3 |
| R121 | C3 | O3 |
| R122 | C4 | O4 |
| R123 | C4 | O4 |
| R124 | C4 | O4 |
| R125 | D3 | O3 |
| R126 | C3 | N4 |
| R127 | C3 | N4 |
| R128 | C3 | N4 |
| R129 | C3 | N4 |
| R132 | D5 | O4 |
| R134 | E5 | O4 |
| R135 | F3 | P3 |
| R136 | D1 | Q5 |
| R137 | E2 | P6 |
| R138 | D1 | P5 |
| R139 | E1 | P5 |
| R140 | E1 | O6 |
| R141 | F1 | O6 |
| R142 | F1 | O6 |
| R143 | F1 | O5 |
| R144 | F1 | O5 |
| R145 | E3 | P5 |
| R146 | E3 | P6 |
| R147 | E3 | O6 |
| R150 | G1 | O5 |
| R151 | F1 | N5 |
| R152 | F1 | N5 |
| R153 | G1 | N6 |
| R154 | G1 | N5 |
| R155 | G2 | M6 |
| R156 | F4 | P3 |
| R157 | F4 | P4 |
| R158 | F4 | P3 |
| R159 | F4 | P4 |
| R160 | F4 | P3 |
| R161 | F5 | P1 |
| R162 | F3 | P1 |
| R163 | F5 | P1 |
| R164 | F3 | P1 |
| R165 | G3 | P3 |
| R166 | H5 | P3 |
| R167 | E3 | P5 |
| R168 | F2 | O1 |
| R201 | G4 | O4 |
| R258 | G5 | P3 |
| R260 | B2 | O2 |
| R261 | C2 | Q3 |
| R262 | G3 | Q3 |
| R650 | G1 | N6 |
| RT5 | D1 | L1 |
| TP6 | H3 | Q4 |
| TP10 | F2 | O0 |
| TP11 | A2 | O0 |
| TP12 | A2 | O0 |
| TP13 | A3 | O0 |
| TP14 | A3 | P0 |
| TP15 | A4 | O0 |
| TP16 | G3 | O0 |
| TP17 | G5 | O0 |
| TP18 | G4 | O0 |
| TP19 | G5 | P0 |
| U16 | B2 | P2 |
| U20A | E5 | O3 |
| U20B | C2 | O3 |
| U21A | D3 | N3 |
| U21B | D4 | N3 |
| U22A | E3 | P5 |
| U22B | E3 | P5 |
| U24A | E1 | O5 |
| U24B | E1 | O5 |
| U25 | F1 | N5 |
| U26A | E4 | P4 |
| U26B | H4 | P4 |
| U26C | G5 | P4 |
| U28A | F5 | O4 |
| U28B | E4 | O4 |
| U28C | E4 | O4 |
| U28D | G4 | O4 |
| U28E | G3 | O4 |
| U28F | E4 | O4 |
| U30A | D4 | N2 |
| U30B | D5 | N2 |
| VR2 | C4 | O4 |
| VR3 | C3 | N4 |

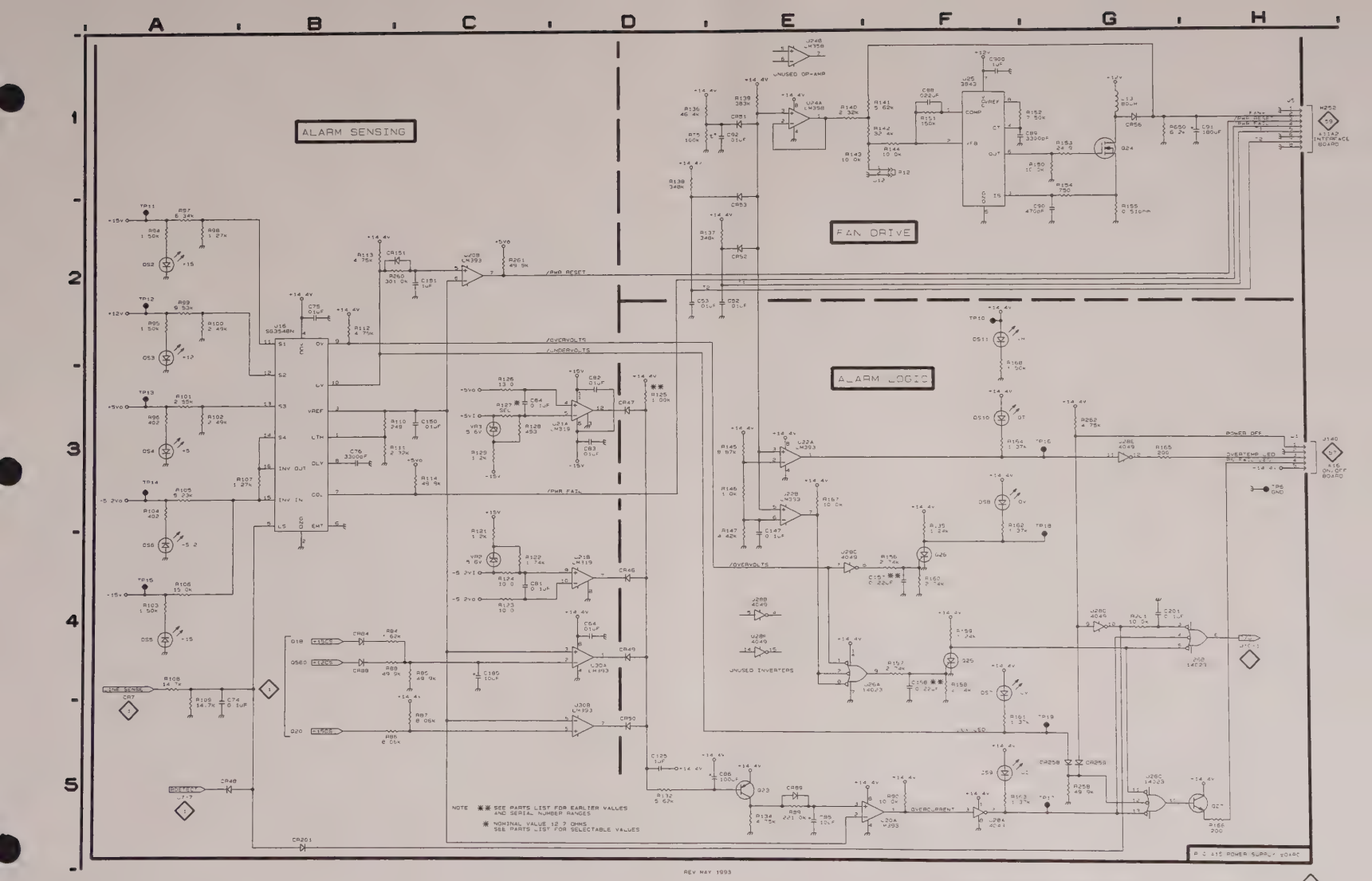
ALARM SENSING
FAN DRIVE
ALARM LOGIC
/OVERVOLTS
/UNDERVOLTS
/PWR FAIL
/PWR RESET
POWER OFF
OVERTEMP LED
NOTE ** SEE PARTS LIST FOR EARLIER VALUES AND SERIAL NUMBER RANGES
* NOMINAL VALUE 12 7 OHMS SEE PARTS LIST FOR SELECTABLE VALUES
UNUSED OP-AMP
UNUSED INVERTERS
REV MAY 1993

ALARM SENSING AND LOGIC,
FAN DRIVE A15<2>

## GPIB CIRCUIT BOARD LOOKUP TABLE

The schematic diagram and circuit board illustration have an alphanumeric grid to assist in locating parts within that diagram or circuit board.

**ASSEMBLY A19.** *Partial Assembly A19 shown on Schematics 1, 2, 3, 4, 5, and 6.* Use this circuit board lookup table for schematic <1>.

| CKT NO. | SCHEM | SCHEM BD LOC | SCHEM BD LOC |
|---|---|---|---|
| C100 | II | B5 | B1 |
| C103 | 1 | C5 | H7 |
| C104 | 1 | C5 | H4 |
| C105 | 1 | C5 | H3 |
| C106 | II | C5 | J3 |
| C107 | II | D5 | J3 |
| C109 | 1 | D5 | B2 |
| C110 | 1 | D5 | I3 |
| C111 | 1 | D5 | H7 |
| C112 | II | C5 | H4 |
| C113 | II | C5 | H3 |
| C114 | 1 | C5 | H5 |
| C116 | 1 | F5 | I3 |
| C117 | 1 | F5 | I3 |
| C120 | 1 | C5 | J4 |
| C121 | 1 | D5 | J4 |
| C128 | 1 | D5 | B2 |
| C129 | II | D5 | C2 |
| C130 | 1 | D5 | C2 |
| C131 | II | E5 | D2 |
| C132 | 1 | C5 | E2 |
| C133 | 2 | E1 | F3 |
| C134 | 2 | F1 | E3 |
| C135 | 2 | C4 | G1 |
| C137 | II | C5 | G3 |
| C138 | 1 | C5 | G4 |
| C139 | 1 | C5 | G5 |
| C140 | 1 | D5 | G4 |
| C141 | 1 | D5 | G5 |
| C145 | 1 | D5 | G6 |
| C148 | 3 | C2 | C2 |
| C149 | 3 | C2 | C3 |
| C150 | 3 | C3 | D3 |
| C151 | 3 | C4 | C3 |
| C152 | 3 | F2 | E3 |
| C153 | 3 | F2 | D3 |
| C154 | 3 | F3 | E3 |
| C155 | 3 | F4 | E3 |
| C160 | 1 | D5 | E5 |
| C161 | 1 | E5 | D5 |
| C162 | 1 | E5 | C5 |
| C163 | 1 | E5 | C5 |
| C164 | 1 | E5 | B4 |
| C167 | 1 | F5 | J8 |
| C168 | 1 | G5 | H8 |
| C169 | 4 | A2 | J7 |
| C170 | 4 | B4 | G8 |
| C171 | 4 | B4 | F7 |
| C174 | 5 | C4 | J7 |
| C175 | 1 | C5 | J5 |
| C178 | 1 | C5 | A8 |
| C214 | 6 | B2 | A7 |
| C215 | 6 | B2 | B7 |
| C216 | 6 | B2 | A7 |
| C220 | 1 | C5 | C8 |
| C221 | 6 | E2 | D8 |
| C222 | 1 | D5 | B8 |
| C223 | 1 | D5 | C6 |
| C224 | 1 | D5 | A4 |
| C509 | 3 | F5 | D6 |
| C510 | 3 | G5 | C5 |
| C511 | 1 | G4 | I4 |
| C512 | 1 | G4 | J4 |
| C515 | 2 | F5 | E5 |
| C516 | 2 | G5 | F5 |
| C517 | 2 | G5 | F5 |
| C518 | 2 | G5 | G4 |
| C522 | 1 | D5 | B3 |
| C523 | 5 | G5 | I6 |
| C524 | 5 | H5 | H4 |
| C601 | 1 | E5 | G3 |
| C602 | 2 | G3 | G7 |
| C603 | 2 | G3 | G5 |
| C604 | 5 | C2 | I5 |
| C605 | 5 | C2 | I7 |
| C606 | 5 | E3 | I8 |
| C607 | 5 | E3 | I7 |
| C608 | 6 | A4 | E7 |
| C609 | 6 | A4 | E7 |
| C610 | 6 | C4 | D8 |
| C611 | 1 | E5 | C7 |
| C612 | 1 | E5 | D7 |
| CR100 | 1 | B1 | C1 |
| CR101 | 1 | B1 | C1 |
| DS101 | 6 | G5 | A3 |
| DS102 | 6 | G5 | A3 |
| DS103 | 6 | F5 | A2 |
| DS104 | 6 | F5 | A2 |
| DS105 | 6 | G5 | A3 |
| DS106 | 6 | H5 | A4 |
| DS107 | 6 | H5 | A4 |
| F100 | 1 | B5 | I1 |
| FL100A | 6 | G1 | B6 |
| FL100B | 6 | G2 | B6 |
| FL100C | 6 | G2 | B6 |
| FL100D | 6 | G2 | B6 |
| FL101A | 6 | G1 | B5 |
| FL101B | 6 | G1 | B5 |
| FL101C | 6 | G1 | B5 |
| FL101D | 6 | G1 | B5 |
| FL102A | 6 | G4 | B6 |
| FL102B | 6 | G3 | B6 |
| FL102C | 6 | G4 | B6 |
| FL102D | 6 | G3 | B6 |
| FL103A | 6 | G3 | B6 |
| FL103B | 6 | G3 | B6 |
| FL103C | 6 | G4 | B6 |
| FL103D | 6 | G3 | B6 |
| J100A | 1 | A1 | F0 |
| J100B | 1 | A2 | F1 |
| J100C | 1 | A4 | F1 |
| J101 | 4 | B5 | I8 |
| J103 | 6 | H2 | A6 |
| J601 | 5 | A1 | I7 |
| J602 | 5 | B2 | I8 |
| J603 | 5 | B3 | G7 |
| J604 | 6 | D4 | F5 |
| J605 | 6 | D4 | E5 |
| J606 | 6 | A5 | E7 |
| J607 | 6 | A5 | E7 |
| R100 | 1 | B5 | J4 |
| R102 | 1 | B3 | J1 |
| R103 | 1 | B1 | C1 |
| R111 | 1 | G4 | I4 |
| R112 | 1 | H5 | J3 |
| R114 | 1 | G4 | J3 |
| R120 | 3 | C1 | B4 |
| R121 | 3 | C2 | C4 |
| R122 | 3 | F1 | D4 |
| R123 | 3 | F2 | E4 |
| R126 | 4 | E1 | J5 |
| R127 | 4 | E1 | J5 |
| R128 | 4 | D2 | C6 |
| R129 | 4 | D3 | D6 |
| R132 | 4 | C4 | H7 |
| R136 | 4 | D4 | F7 |
| R137 | 4 | D1 | J6 |
| R138 | 4 | B1 | F6 |
| R141 | 4 | D5 | H7 |
| R142 | 4 | D5 | H7 |
| R168 | 5 | E2 | H7 |
| R183 | 6 | B1 | B8 |
| R184B | 6 | B2 | B7 |
| R184C | 6 | B2 | B7 |
| R184D | 6 | B2 | B7 |
| R186 | 6 | H4 | A2 |
| R187 | 6 | E3 | B7 |
| R188 | 6 | E1 | B6 |
| R189 | 6 | C1 | B7 |
| R502 | 1 | D1 | H6 |
| R503 | 1 | D1 | H5 |
| R504 | 1 | D2 | H5 |
| R505 | 1 | D2 | H4 |
| R506 | 1 | D2 | H3 |
| R507 | 1 | D2 | H2 |
| R508A | 4 | G2 | E4 |
| R508B | 4 | G2 | E4 |
| R508C | 4 | G2 | E4 |
| R508D | 4 | G2 | E4 |
| R509A | 4 | G3 | C4 |
| R509B | 4 | G3 | C4 |
| R509C | 4 | G3 | C4 |
| R509D | 4 | G3 | C4 |
| R510A | 4 | G3 | E4 |
| R510B | 4 | G3 | E4 |
| R510C | 4 | G3 | E4 |
| R510D | 4 | G3 | E4 |
| R511A | 4 | G4 | D4 |
| R511B | 4 | G4 | D4 |
| R511C | 4 | G4 | D4 |
| R511D | 4 | G4 | D4 |
| R512 | 4 | D3 | F7 |
| R513 | 4 | D3 | E6 |
| R514 | 4 | D4 | E6 |
| R515 | 4 | D4 | F6 |
| R516 | 4 | D1 | E6 |
| R517 | 4 | D1 | G7 |
| R518 | 4 | D1 | F6 |
| R519 | 4 | D2 | F6 |
| R520 | 4 | D2 | H7 |
| R521 | 4 | D2 | F6 |
| R522A | 4 | A2 | J7 |
| R522B | 4 | A2 | J7 |
| R522C | 4 | C2 | J7 |
| R523A | 4 | B3 | I8 |
| R523B | 4 | C2 | I8 |
| R523C | 4 | C1 | I8 |
| R523D | 4 | C2 | I8 |
| R535 | 5 | C1 | I6 |
| R536 | 5 | C1 | I5 |
| R539 | 1 | C1 | B2 |
| R540 | 5 | B3 | I7 |
| R544 | 1 | F5 | I3 |
| R545 | 1 | F5 | I3 |
| R601 | 2 | D4 | F2 |
| R602 | 4 | C5 | H7 |
| R603 | 5 | E4 | J6 |
| R604 | 5 | E4 | J6 |
| R605 | 5 | A1 | H7 |
| R606 | 5 | C2 | I8 |
| R607 | 6 | B3 | E5 |
| R608 | 6 | D5 | D7 |
| R609 | 3 | G5 | C1 |
| R610 | 5 | H5 | I5 |
| R611 | 5 | H5 | H5 |
| R612 | 6 | C3 | C8 |
| R613 | 6 | A3 | E6 |
| R614 | 4 | D4 | B4 |
| RC100 | 3 | D2 | C3 |
| RC101 | 3 | C4 | B3 |
| RC102 | 3 | B5 | B3 |
| RC103 | 3 | D4 | C3 |
| RC104 | 3 | F2 | D3 |
| RC105 | 3 | F4 | E3 |
| RC501 | 2 | D2 | F4 |
| RC502 | 2 | D2 | F2 |
| S100 | 1 | B4 | J1 |
| TP100 | 1 | B4 | J1 |
| TP101 | 1 | C4 | A1 |
| TP102 | 1 | C4 | B7 |
| TP103 | 1 | C4 | J7 |
| U100 | 1 | C3 | J2 |
| U102A | 1 | B1 | B2 |
| U102B | 1 | C1 | B2 |
| U102C | 6 | D5 | B2 |
| U102D | 1 | E1 | B2 |
| U103 | 1 | C1 | I6 |
| U104 | 1 | C2 | I3 |
| U105 | 1 | C2 | I2 |
| U106 | 1 | C3 | K2 |
| U107 | 1 | D1 | H6 |
| U108 | 1 | D2 | H3 |
| U109 | 1 | D2 | H2 |
| U110 | 1 | D4 | I2 |
| U111 | 1 | D4 | H5 |
| U113 | 1 | G5 | K3 |
| U115 | 1 | F5 | J3 |
| U122 | 1 | G1 | C2 |
| U123 | 1 | G1 | D2 |
| U124 | 1 | G2 | D2 |
| U125 | 1 | G3 | E2 |
| U126 | 1 | F3 | B2 |
| U130 | 2 | E1 | F3 |
| U131 | 2 | B2 | G3 |
| U132 | 2 | B2 | G3 |
| U133 | 2 | B1 | G4 |
| U134 | 2 | B3 | G2 |
| U135 | 2 | B1 | G4 |
| U138 | 2 | G2 | G6 |
| U142 | 3 | C1 | C3 |
| U143 | 3 | C2 | B3 |
| U144 | 3 | C3 | D3 |
| U145 | 3 | E1 | D3 |
| U146 | 3 | E2 | D3 |
| U147 | 3 | E3 | E3 |
| U148 | 3 | E3 | E3 |
| U149 | 3 | C3 | C3 |
| U154 | 4 | H2 | C4 |
| U155 | 4 | H3 | D4 |
| U156 | 4 | H3 | D4 |
| U157 | 4 | H4 | E4 |
| U158 | 4 | G4 | B4 |
| U162 | 4 | B3 | F7 |
| U164A | 4 | B2 | J7 |
| U164B | 4 | B2 | J7 |
| U168A | 6 | A2 | A8 |
| U168B | 1 | F1 | A8 |
| U199 | 6 | F1 | C6 |
| U200 | 6 | D1 | C7 |
| U201 | 6 | F3 | C7 |
| U203 | 6 | B1 | B7 |
| U207 | 6 | F5 | A4 |
| U504 | 3 | F4 | D5 |
| U505 | 1 | F4 | I4 |
| U507 | 2 | F4 | F5 |
| U509A | 3 | G5 | B3 |
| U509B | 1 | E1 | B3 |
| U509C | 1 | E1 | B3 |
| U509D | 1 | F1 | B3 |
| U601 | 2 | B3 | G2 |
| U602 | 2 | F2 | G6 |
| U605 | 4 | F5 | H7 |
| U606 | 5 | G5 | I5 |
| U607 | 5 | B5 | J5 |
| U608 | 5 | B4 | J6 |
| U609 | 5 | B1 | I6 |
| U610 | 5 | D2 | I7 |
| U611 | 6 | B4 | E7 |
| U612 | 6 | B3 | D6 |
| U613 | 6 | B3 | D6 |
| Y501 | 2 | D4 | F1 |
| Y502 | 4 | A2 | J7 |
| Y601 | 6 | A4 | E7 |

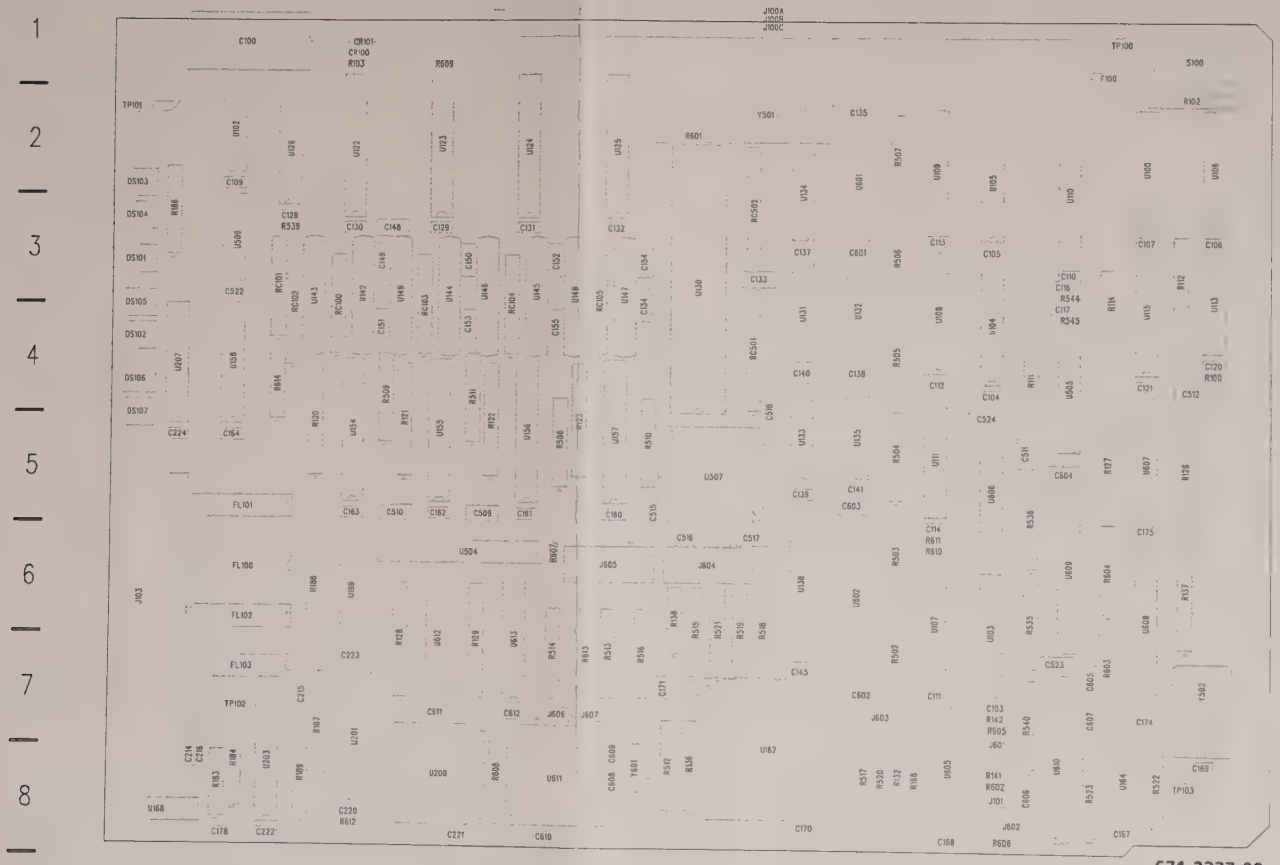


A19 GPIB BOARD

671-2337-00

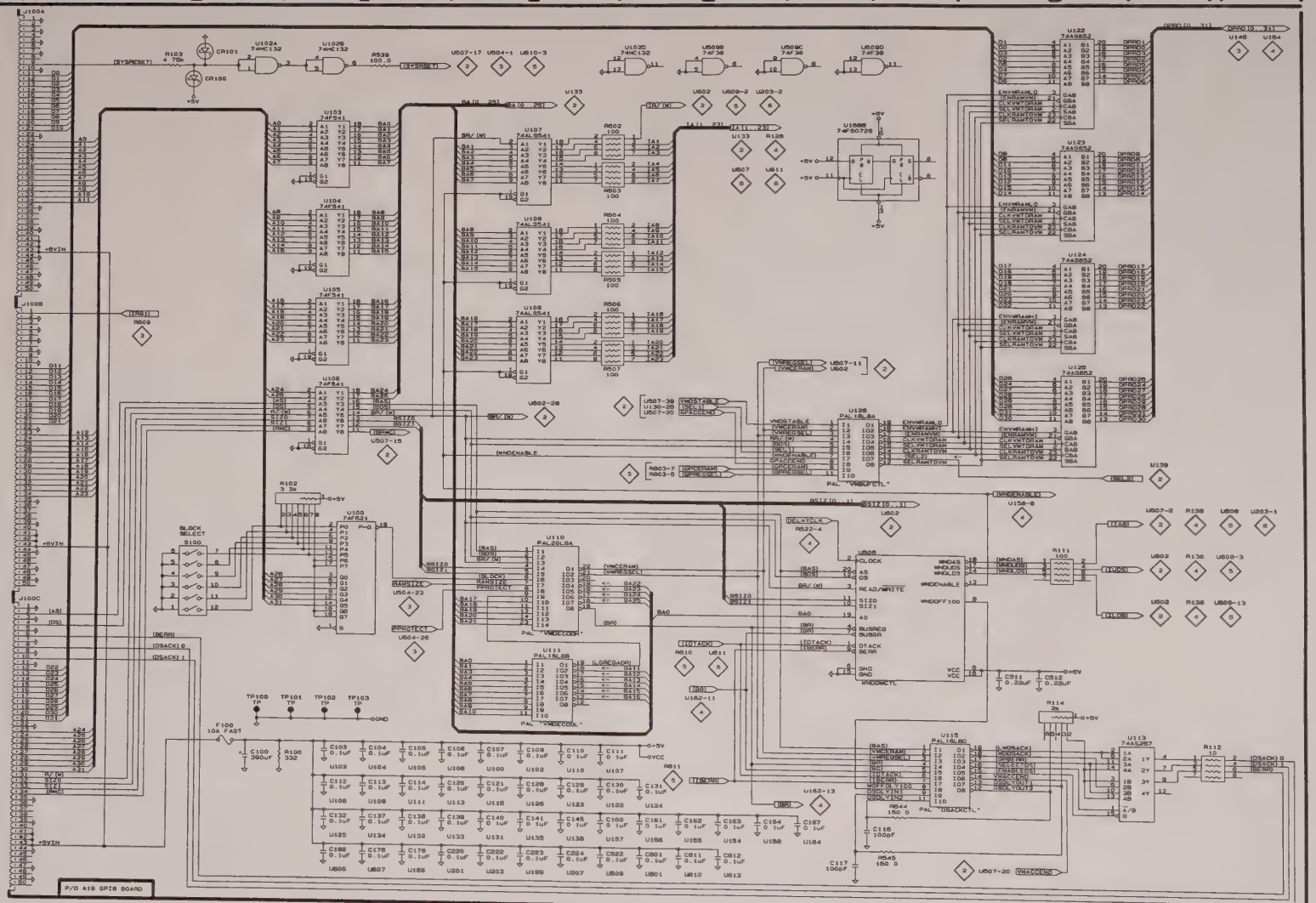
A B C D E F G H
1 2 3 4 5
FROM MOTHER BOARD
P/O A19 GPIB BOARD
J100A
J100B
J100C
U102A 74HC132
U102B 74HC132
U102D 74F38
U509B 74F38
U509C 74F38
U509D 74F38
U103 74F541
U104 74F541
U105 74F541
U106 74F541
U107 74ALS541
U108 74ALS541
U109 74ALS541
U133
U502
U509-2
U203-2
U507-17
U504-1
U510-3
U507-11
U502
U507-30
U130-20
U507-20
U507-15
U502-28
U503-7
U503-5
U507-2
U507-3
U507-4
U507-5
U507-6
U507-7
U507-8
U507-9
U507-10
U507-11
U507-12
U507-13
U507-14
U507-15
U507-16
U507-17
U507-18
U507-19
U507-20
U502
U509-2
U203-2
U504-23
U504-26
U162-11
U162-13
U504-3
U504-4
U504-5
U504-6
U504-7
U504-8
U504-9
U504-10
U504-11
U504-12
U504-13
U504-14
U504-15
U504-16
U504-17
U504-18
U504-19
U504-20
U504-21
U504-22
U504-23
U504-24
U504-25
U504-26
U504-27
U504-28
U504-29
U504-30
U504-31
U504-32
U504-33
U504-34
U504-35
U504-36
U504-37
U504-38
U504-39
U504-40
U504-41
U504-42

## SCHEMATIC DIAGRAM <2>
## GPIB BOARD

The schematic diagram and circuit board illustration have an alphanumeric grid to assist in locating parts within that diagram or circuit board.

**ASSEMBLY A19.** *Partial Assembly A19 also shown on Schematics 1 and 3 through 6.*

| CIRCUIT NUMBER | SCHEM LOCATION | BOARD LOCATION |
|---|---|---|
| C133 | E1 | F3 |
| C134 | F1 | E3 |
| C135 | C4 | G1 |
| C515 | F5 | E5 |
| C516 | G5 | F5 |
| C517 | G5 | F5 |
| C518 | G5 | G4 |
| C602 | G3 | G7 |
| C603 | G3 | G5 |
| R601 | D4 | F2 |
| RC501 | D2 | F4 |
| RC502 | D2 | F2 |
| U130 | E1 | F3 |
| U131 | B2 | G3 |
| U132 | B2 | G3 |
| U133 | B1 | G4 |
| U134 | B3 | G2 |
| U135 | B1 | G4 |
| U138 | G2 | G6 |
| U507 | F4 | F5 |
| U601 | B3 | G2 |
| U602 | F2 | G6 |
| Y501 | D4 | F1 |

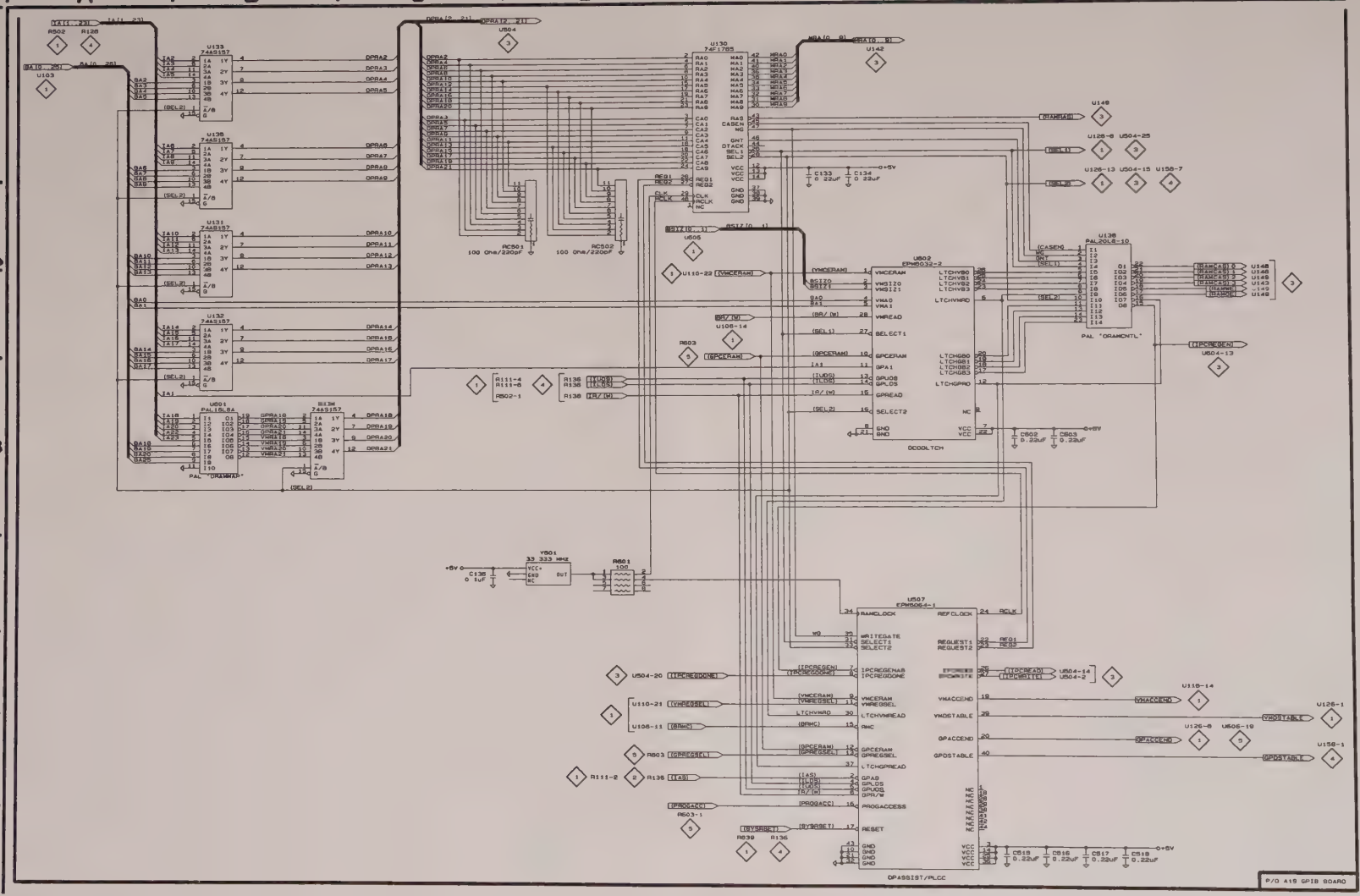
A B C D E F G H
1 2 3 4 5
U133 74AS157
U136 74AS157
U131 74AS157
U132 74AS157
U135 74AS157
U103
U130 74F1785
U142
U149
U126-8 U504-25
U126-13 U504-15 U158-7
U505
U502 EPM5032-2
U138 PAL20L8-10
PAL "DRAMCNTL"
U504
RC501 100 Ohm/220nF
RC502 100 Ohm/220nF
U501 PAL16L8A
PAL "DRAMADR"
U503 74AS157
U106-14
R503
U504-13
DCOOLTCH
Y501 33.333 MHz
RA01 100
U507 EPM5064-1
DPASSIST/PLCC
U504-20
U504-14 U504-2
U110-14
U110-21
U108-11
R803
R136
R111-2
R503-1
U126-1
U126-8 U504-10
U158-1
P/O A19 GPIB BOARD
VM700A GPIB INTERFACE
DUAL-PORT MEMORY CONTROLLER AND INTERFACE
2

## SCHEMATIC DIAGRAM <3>
## GPIB BOARD

The schematic diagram and circuit board illustration have an alphanumeric grid to assist in locating parts within that diagram or circuit board.

**ASSEMBLY A19**. *Partial Assembly A19 also shown on Schematics 1, 2, 4, 5, and 6.*

| CIRCUIT NUMBER | SCHEM LOCATION | BOARD LOCATION |
|---|---|---|
| C148 | C2 | C2 |
| C149 | C2 | C3 |
| C150 | C3 | D3 |
| C151 | C4 | C3 |
| C152 | F2 | E3 |
| C153 | F2 | D3 |
| C154 | F3 | E3 |
| C155 | F4 | E3 |
| C509 | F5 | D5 |
| C510 | G5 | C5 |
| R120 | C1 | B4 |
| R121 | C2 | C4 |
| R122 | F1 | D4 |
| R123 | F2 | E4 |
| R609 | G5 | C1 |
| RC100 | D2 | C3 |
| RC101 | C4 | B3 |
| RC102 | B5 | B3 |
| RC103 | D4 | C3 |
| RC104 | F2 | D3 |
| RC105 | F4 | E3 |
| U142 | C1 | C3 |
| U143 | C2 | B3 |
| U144 | C3 | D3 |
| U145 | E1 | D3 |
| U146 | E2 | D3 |
| U147 | E3 | E3 |
| U148 | E3 | E3 |
| U149 | C3 | C3 |
| U504 | F4 | D5 |
| U509A | G5 | B3 |

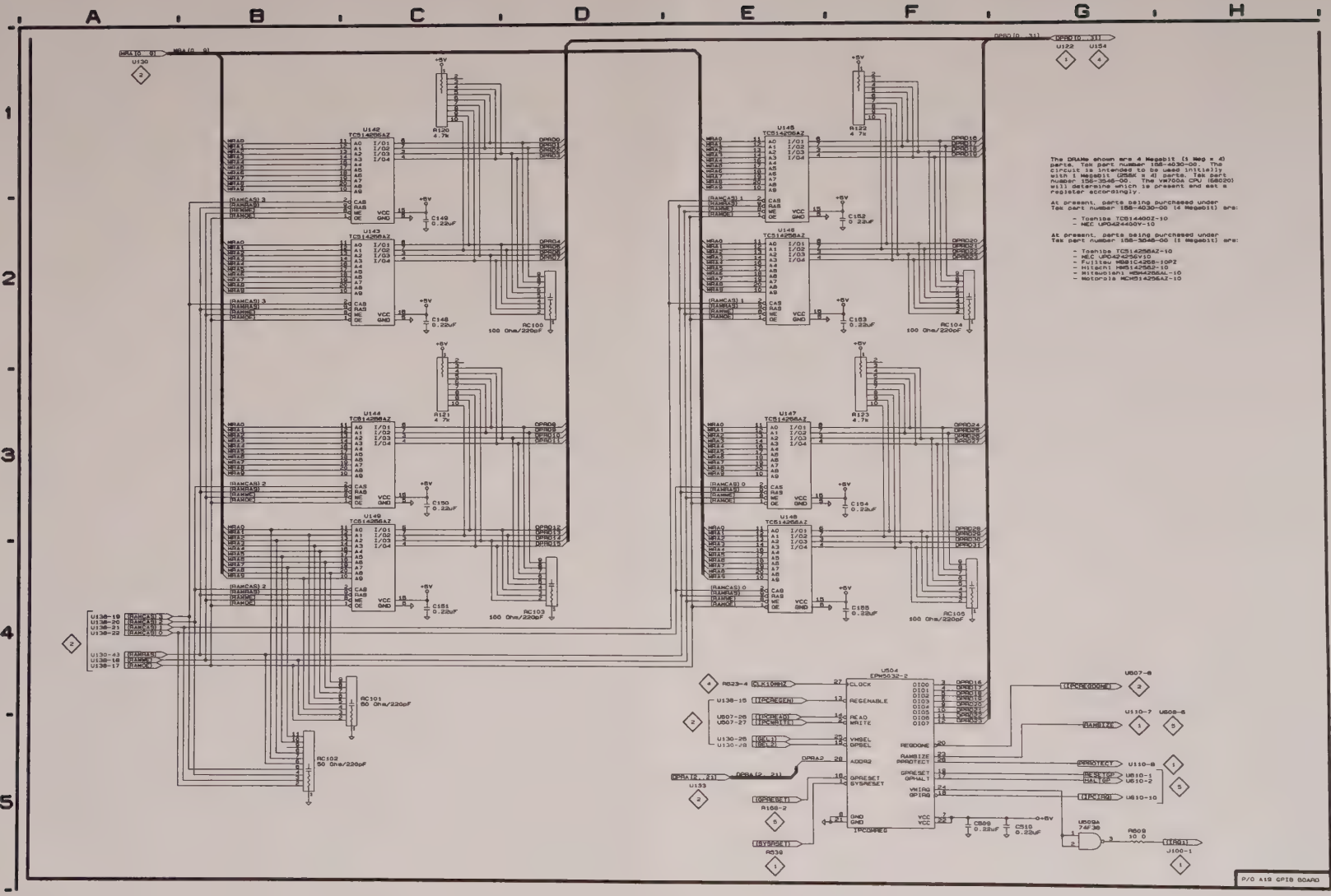


The DRAMs shown are 4 Megabit (1 Meg x 4) parts. Tek part number 158-4030-00. The circuit is intended to be used initially with 1 Megabit (256K x 4) parts. Tek part number 156-3546-00. The VM700A CPU (68020) will determine which is present and set a register accordingly.

At present, parts being purchased under Tek part number 158-4030-00 (4 Megabit) are:

- Toshiba TC5144002-10
- NEC UPD424400V-10

At present, parts being purchased under Tek part number 158-3546-00 (1 Megabit) are:

- Toshiba TC514256AZ-10
- NEC UPD424256V10
- Fujitsu MB81C4258-10PZ
- Hitachi HM514258Z-10
- Mitsubishi M5M4256AL-10
- Motorola MCM514256AZ-10

VM700A GPIB INTERFACE

DUAL-PORT MEMORY AND INTERPROCESSOR COMMUNICATION REGISTER

## SCHEMATIC DIAGRAM <4>
## GPIB BOARD

The schematic diagram and circuit board illustration have an alphanumeric grid to assist in locating parts within that diagram or circuit board.

**ASSEMBLY A19.** *Partial Assembly A19 also shown on Schematics 1, 2, 3, 5, and 6.*

| CIRCUIT NUMBER | SCHEM LOCATION | BOARD LOCATION | CIRCUIT NUMBER | SCHEM LOCATION | BOARD LOCATION |
|---|---|---|---|---|---|
| C169 | A2 | J7 | R516 | D1 | E6 |
| C170 | B4 | G8 | R517 | D1 | G7 |
| C171 | B4 | F7 | R518 | D1 | F6 |
| | | | R519 | D2 | F6 |
| J101 | B5 | I8 | R520 | D2 | H7 |
| | | | | | |
| R126 | E1 | J5 | R521 | D2 | F6 |
| R127 | E1 | J5 | R522A | A2 | J7 |
| R128 | D2 | C6 | R522B | A2 | J7 |
| R129 | D3 | D6 | R522C | C2 | J7 |
| R132 | C4 | H7 | R523A | B3 | I8 |
| | | | | | |
| R136 | D4 | F7 | R523B | C2 | I8 |
| R137 | D1 | J6 | R523C | C1 | I8 |
| R138 | B1 | F6 | R523D | C2 | I8 |
| R141 | D5 | H7 | R602 | C5 | H7 |
| R142 | D5 | H7 | R614 | D4 | B4 |
| | | | | | |
| R508A | G2 | E4 | U154 | H2 | C4 |
| R508B | G2 | E4 | U155 | H3 | D4 |
| R508C | G2 | E4 | U156 | H3 | D4 |
| R508D | G2 | E4 | U157 | H4 | E4 |
| R509A | G3 | C4 | U158 | G4 | B4 |
| | | | | | |
| R509B | G3 | C4 | U162 | B3 | F7 |
| R509C | G3 | C4 | U164A | B2 | J7 |
| R509D | G3 | C4 | U164B | B2 | J7 |
| R510A | G3 | E4 | U605 | F5 | H7 |
| R510B | G3 | E4 | | | |
| | | | Y502 | A2 | J7 |
| R510C | G3 | E4 | | | |
| R510D | G3 | E4 | | | |
| R511A | G4 | D4 | | | |
| R511B | G4 | D4 | | | |
| R511C | G4 | D4 | | | |
| | | | | | |
| R511D | G4 | D4 | | | |
| R512 | D3 | F7 | | | |
| R513 | D3 | E6 | | | |
| R514 | D4 | E6 | | | |
| R515 | D4 | F6 | | | |

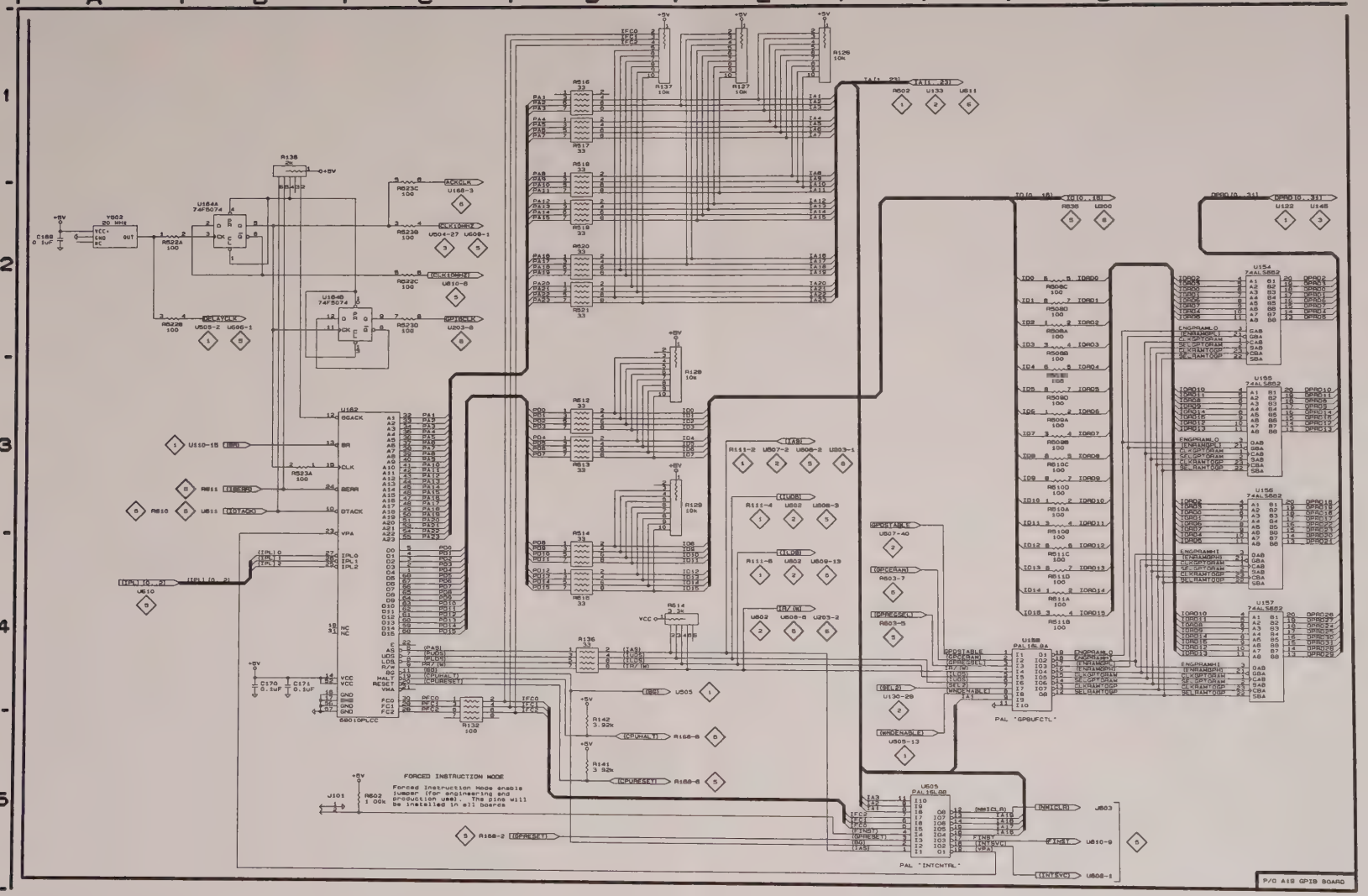
A
B
C
D
E
F
G
H
1
2
3
4
5
FORCED INSTRUCTION MODE
Forced Instruction Mode enable jumper (for engineering and production use). This pins will be installed in all boards
PAL "GPBUFCTL"
PAL "INTCNTRL"
P/O A18 GPIB BOARD

## SCHEMATIC DIAGRAM <5>
## GPIB BOARD

The schematic diagram and circuit board illustration have an alphanumeric grid to assist in locating parts within that diagram or circuit board.

**ASSEMBLY A19.** *Partial Assembly A19 also shown on Schematics 1, 2, 3, 4, and 6.*

| CIRCUIT NUMBER | SCHEM LOCATION | BOARD LOCATION |
|---|---|---|
| C174 | C4 | J7 |
| C523 | G5 | I6 |
| C524 | H5 | H4 |
| C604 | C2 | I5 |
| C605 | C2 | I7 |
| C606 | E3 | I8 |
| C607 | E3 | I7 |
| J601 | A1 | I7 |
| J602 | B2 | I8 |
| J603 | B3 | G7 |
| R168 | E2 | H7 |
| R535 | C1 | I6 |
| R536 | C1 | I5 |
| R540 | B3 | I7 |
| R603 | E4 | J6 |
| R604 | E4 | J6 |
| R605 | A1 | H7 |
| R606 | C2 | I8 |
| R610 | H5 | H5 |
| R611 | H5 | H5 |
| U606 | G5 | I5 |
| U607 | B5 | J5 |
| U608 | B4 | J6 |
| U609 | B1 | I6 |
| U610 | D2 | I7 |

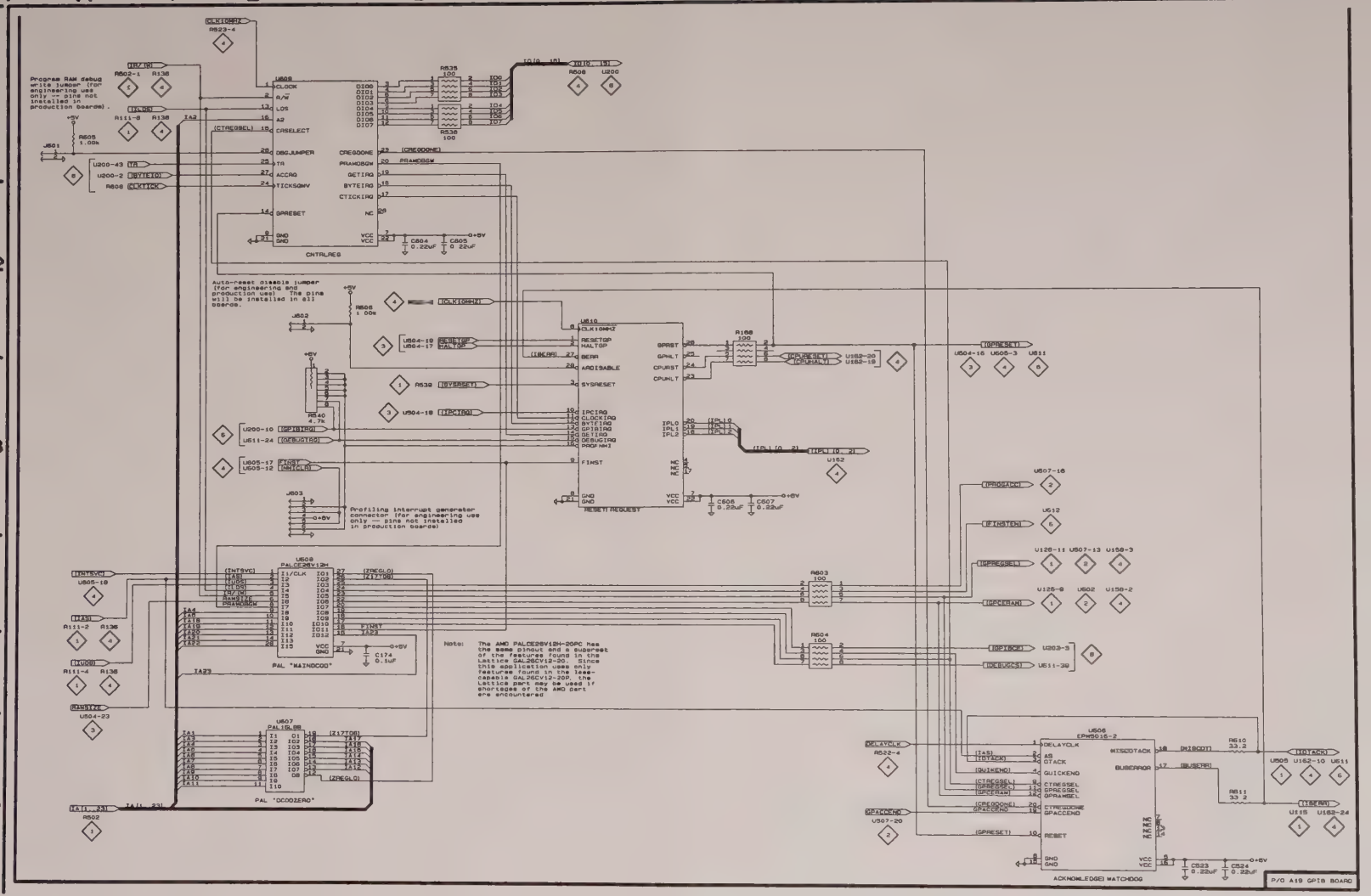


Note: The AMD PALCE26V12H-20PC has the same pinout and a superset of the features found in the Lattice GAL26CV12-20. Since this application uses only features found in the less-capable GAL26CV12-20P, the Lattice part may be used if shortages of the AMD part are encountered.

## SCHEMATIC DIAGRAM <6>
## GPIB BOARD

The schematic diagram and circuit board illustration have an alphanumeric grid to assist in locating parts within that diagram or circuit board.

**ASSEMBLY A19.** *Partial Assembly A19 also shown on Schematics 1, 2, 3, 4, and 5.*

| CIRCUIT NUMBER | SCHEM LOCATION | BOARD LOCATION | CIRCUIT NUMBER | SCHEM LOCATION | BOARD LOCATION |
|---|---|---|---|---|---|
| C214 | B2 | A7 | J103 | H2 | A6 |
| C215 | B2 | B7 | J604 | D4 | F5 |
| C216 | B2 | A7 | J605 | D4 | E5 |
| C221 | E2 | D8 | J606 | A5 | E7 |
| | | | J607 | A5 | E7 |
| C608 | A4 | E7 | | | |
| C609 | A4 | E7 | R183 | B1 | B8 |
| C610 | C4 | D8 | R184B | B2 | B7 |
| | | | R184C | B2 | B7 |
| DS101 | G5 | A3 | R184D | B2 | B7 |
| DS102 | G5 | A3 | | | |
| DS103 | F5 | A2 | R186 | H4 | A2 |
| DS104 | F5 | A2 | R187 | E3 | B7 |
| | | | R188 | E1 | B6 |
| DS105 | G5 | A3 | R189 | C1 | B7 |
| DS106 | H5 | A4 | | | |
| DS107 | H5 | A4 | R607 | B3 | E5 |
| | | | R608 | D5 | D7 |
| FL100A | G1 | B6 | R612 | C3 | C8 |
| FL100B | G2 | B6 | R613 | A3 | E6 |
| FL100C | G2 | B6 | | | |
| FL100D | G2 | B6 | U102C | D5 | B2 |
| | | | U168A | A2 | A8 |
| FL101A | G1 | B5 | U199 | F1 | C6 |
| FL101B | G1 | B5 | U200 | D1 | C7 |
| FL101C | G1 | B5 | | | |
| FL101D | G1 | B5 | U201 | F3 | C7 |
| | | | U203 | B1 | B7 |
| FL102A | G4 | B6 | U207 | F5 | A4 |
| FL102B | G3 | B6 | U611 | B4 | E7 |
| FL102C | G4 | B6 | | | |
| FL102D | G3 | B6 | U612 | B3 | D6 |
| | | | U613 | B3 | D6 |
| FL103A | G3 | B6 | | | |
| FL103B | G3 | B6 | Y601 | A4 | E7 |
| FL103C | G4 | B6 | | | |
| FL103D | G3 | B6 | | | |

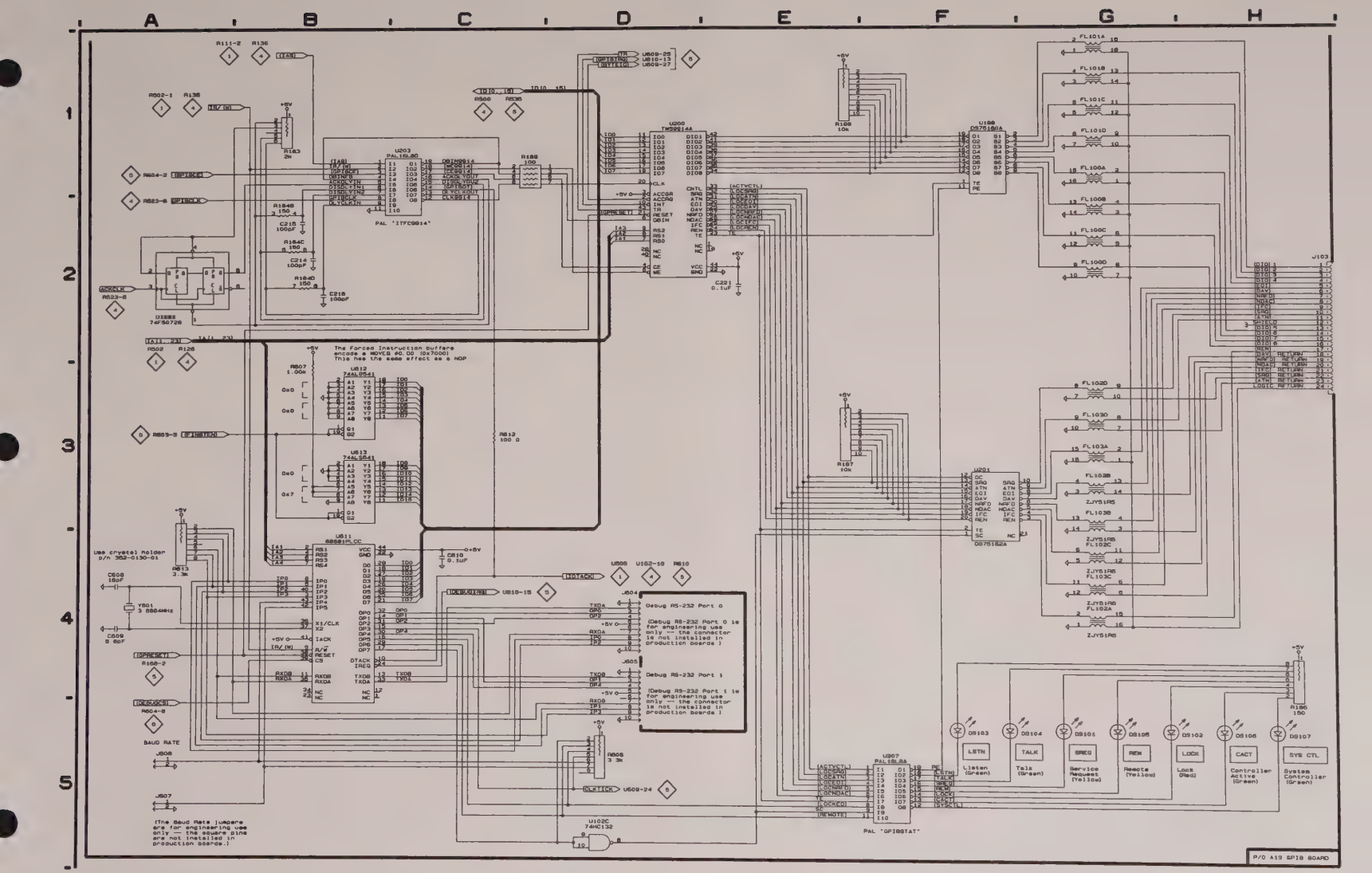
A B C D E F G H
1 2 3 4 5
U200 TMS9914A
U203 PAL16L8D
PAL 'IFFC9914'
U202 74F50726
U812 74ALS541
U813 74ALS541
The Forced Instruction Buffers encode a MOVE8 #0.D0 (0x7000) This has the same effect as a NOP
0x0
0x0
0x7
U811 68B09PLCC
Use crystal holder p/n 352-0130-01
YB01 3.6864MHz
C608 18pF
C609 8.6pF
R813 3.3K
R812 100 Ω
R807 1.00K
R808 3.3K
R809 3.3K
R100 10K
R167 10K
R186 150
C810 0.1uF
C223 0.1uF
C215 1000F
C214 100pF
C216 100pF
R184B 150
R184C 180
R184D 150
U100 DS75160A
U201 DS75162A
FL101A
FL101B
FL101C
FL101D
FL100A
FL100B
FL100C
FL100D
FL102D
FL1030
FL103A
FL103B
FL103C
FL102A
FL102B
ZJY51R5
J103
J604
J605
J606
J507
Debug RS-232 Port 0
(Debug RS-232 Port 0 is for engineering use only — the connector is not installed in production boards.)
Debug RS-232 Port 1
(Debug RS-232 Port 1 is for engineering use only — the connector is not installed in production boards.)
BAUD RATE
(The Baud Rate jumpers are for engineering use only — the square pins are not installed in production boards.)
U102C 74HC132
U207 PAL16L8A
PAL 'GPIBSTAT'
DS103 LSTN Listen (Green)
DS104 TALK Talk (Green)
DS101 SREQ Service Request (Yellow)
DS105 REN Remote (Yellow)
DS102 LOCK Lock (Red)
DS106 CACT Controller Active (Green)
DS107 SYS CTL System Controller (Green)
P/O A19 GPIB BOARD

# REPLACEABLE MECHANICAL PARTS LIST B1

## PARTS ORDERING INFORMATION

Replacement parts are available from or through your local Tektronix, Inc., field office or representative.

Changes to Tektronix instruments are sometimes made to accommodate improved components as they become available, and to give you the benefit of the latest circuit improvements developed in our engineering department. It is therefore important, when ordering parts, to include the following information in your order: Part number, instrument type or number, serial number, and modification number, if applicable.

If a part you have ordered has been replaced with a new or improved part, your local Tektronix, Inc., field office or representative will contact you concerning any change in part number.

Change information, if any, is located at the rear of this manual.

## ITEM NAME

In the Parts List, an Item Name is separated from the description by a colon (:). Because of space limitations, an Item Name may sometimes appear as incomplete. For further Item Name identification, the U.S. Federal Cataloging Handbook H6-1 can be utilized where possible.

## FIGURE AND INDEX NUMBERS

Items in this section are referenced by figure and index numbers to the illustrations.

## INDENTATION SYSTEM

This Mechanical Parts List is indented to indicate item relationships. Following is an example of the indentation system used in the description column.

```
1  2  3  4  5          Name & Description
Assembly and/or Component
Mounting parts for Assembly and/or Component
*MOUNTING PARTS*/*END MOUNTING PARTS*
    Detail Part of Assembly and/or Component
    Mounting parts for Detail Part
    *MOUNTING PARTS*/*END MOUNTING
    PARTS*
        Parts of Detail Part
        Mounting parts for Parts of Detail Part
        *MOUNTING PARTS*/*END MOUNTING
        PARTS*
```

Mounting Parts always appear in the same indentation as the item it mounts, while the detail parts are indented to the right. Indented items are part of and included with, the next higher indentation.

**Mounting parts must be purchased separately, unless otherwise specified.**

## CHASSIS PARTS

Chassis-mounted parts and cable assemblies may be found at the end of the Electrical Parts List.

## ABBREVIATIONS

| | |
|---|---|
| " | INCH |
| # | NUMBER SIZE |
| ACTR | ACTUATOR |
| ADPTR | ADAPTER |
| ALIGN | ALIGNMENT |
| AL | ALUMINUM |
| ASSEM | ASSEMBLED |
| ASSY | ASSEMBLY |
| ATTEN | ATTENUATOR |
| AWG | AMERICAN WIRE GAGE |
| BD | BOARD |
| BRKT | BRACKET |
| BRS | BRASS |
| BRZ | BRONZE |
| BSHG | BUSHING |
| CAB | CABINET |
| CAP | CAPACITOR |
| CER | CERAMIC |
| CHAS | CHASSIS |
| CKT | CIRCUIT |
| COMP | COMPOSITION |
| CONN | CONNECTOR |
| COV | COVER |
| CPLG | COUPLING |
| CRT | CATHODE RAY TUBE |
| DEG | DEGREE |
| DWR | DRAWER |
| ELCTRN | ELECTRON |
| ELEC | ELECTRICAL |
| ELCTLT | ELECTROLYTIC |
| ELEM | ELEMENT |
| EPL | ELECTRICAL PARTS LIST |
| EQPT | EQUIPMENT |
| EXT | EXTERNAL |
| FIL | FILLISTER HEAD |
| FLEX | FLEXIBLE |
| FLH | FLAT HEAD |
| FLTR | FILTER |
| FR | FRAME or FRONT |
| FSTNR | FASTENER |
| FT | FOOT |
| FXD | FIXED |
| GSKT | GASKET |
| HDL | HANDLE |
| HEX | HEXAGON |
| HEX HD | HEXAGONAL HEAD |
| HEX SOC | HEXAGONAL SOCKET |
| HLCPS | HELICAL COMPRESSION |
| HLEXT | HELICAL EXTENSION |
| HV | HIGH VOLTAGE |
| IC | INTEGRATED CIRCUIT |
| ID | INSIDE DIAMETER |
| IDENT | IDENTIFICATION |
| IMPLR | IMPELLER |
| IN | INCH |
| INCAND | INCANDESCENT |
| INSUL | INSULATOR |
| INTL | INTERNAL |
| LPHLDR | LAMPHOLDER |
| MACH | MACHINE |
| MECH | MECHANICAL |
| MTG | MOUNTING |
| NIP | NIPPLE |
| NONWIRE | NOT WIRE WOUND |
| OBD | ORDER BY DESCRIPTION |
| OD | OUTSIDE DIAMETER |
| OVH | OVAL HEAD |
| PH BRZ | PHOSPHOR BRONZE |
| PL | PLAIN or PLATE |
| PLSTC | PLASTIC |
| PN | PART NUMBER |
| PNH | PAN HEAD |
| PWR | POWER |
| RCPT | RECEPTACLE |
| RES | RESISTOR |
| RGD | RIGID |
| RLF | RELIEF |
| RTNR | RETAINER |
| SCH | SOCKET HEAD |
| SCOPE | OSCILLOSCOPE |
| SCR | SCREW |
| SE | SINGLE END |
| SECT | SECTION |
| SEMICOND | SEMICONDUCTOR |
| SHLD | SHIELD |
| SHLDR | SHOULDERED |
| SKT | SOCKET |
| SL | SLIDE |
| SLFLKG | SELF-LOCKING |
| SLVG | SLEEVING |
| SPR | SPRING |
| SQ | SQUARE |
| SST | STAINLESS STEEL |
| STL | STEEL |
| SW | SWITCH |
| T | TUBE |
| TERM | TERMINAL |
| THD | THREAD |
| THK | THICK |
| TNSN | TENSION |
| TPG | TAPPING |
| TRH | TRUSS HEAD |
| V | VOLTAGE |
| VAR | VARIABLE |
| W/ | WITH |
| WSHR | WASHER |
| XFMR | TRANSFORMER |
| XSTR | TRANSISTOR |

## CROSS INDEX - MFR. CODE NUMBER TO MANUFACTURER

| Mfr. Code | Manufacturer | Address | City, State, Zip Code |
|---|---|---|---|
| 01536 | TEXTRON INC<br>CAMCAR DIV<br>SEMS PRODUCTS UNIT | 1818 CHRISTINA ST | ROCKFORD IL 61108 |
| 02697 | PARKER-HANNIFIN CORP<br>SEAL GROUP-O-RING DIV | 2360 PALUMBO DR<br>PO BOX 11751 | LEXINGTON KY 40512 |
| 06666 | GENERAL DEVICES CO INC | 1410 S POST RD<br>PO BOX 39100 | INDIANAPOLIS IN 46239-9632 |
| 09422 | PLASTIC STAMPING CORP | 2216 W ARMITAGE AVE | CHICAGO IL 60647-4461 |
| 12327 | FREEWAY CORP | 9301 ALLEN DR | CLEVELAND OH 44125-4632 |
| 52961 | NORTHWEST STAMPING | 86365 COLLEGE VIEW RD | EUGENE OR 97405-9631 |
| 71400 | BUSSMANN<br>DIV OF COOPER INDUSTRIES INC | 114 OLD STATE RD<br>PO BOX 14460 | ST LOUIS MO 63178 |
| 72228 | AMCA INTERNATIONAL CORP<br>CONTINENTAL SCREW CO DIV | 459 MT PLEASANT | NEW BEDFORD MA 02742 |
| 73743 | FISCHER SPECIAL MFG CO | 111 INDUSTRIAL RD | COLD SPRING KY 41076-9749 |
| 75915 | LITTELFUSE INC<br>SUB TRACOR INC | 800 E NORTHWEST HWY | DES PLAINES IL 60016-3049 |
| 77900 | ILLINOIS TOOL WORKS<br>SHAKEPROOF DIV | ST CHARLES RD | ELGIN IL 60120 |
| 78189 | ILLINOIS TOOL WORKS INC<br>SHAKEPROOF DIV | ST CHARLES ROAD | ELGIN IL 60120 |
| 78553 | EATON CORP<br>ENGINEERED FASTENER DIV | 8700 BROOKPARK RD<br>P O BOX 6688 | CLEVELAND OH 44101 |
| 79136 | WALDES KOHINOOR INC | 47-16 AUSTEL PLACE | LONG ISLAND CITY NY 11101-4402 |
| 80009 | TEKTRONIX INC | 14150 SW KARL BRAUN DR<br>PO BOX 500 | BEAVERTON OR 97077-0001 |
| 80112 | G. C. ELECTRONICS COMPANY, A DIVISIO N OF HYDROMETALS, INC. | 3225 EXPOSITION PLACE | LOS ANGELES, CA 90018 |
| 81041 | HOWARD INDUSTRIES<br>DIV OF MSL INDUSTRIES INC | 1 NORTH DIXIE HWY<br>PO BOX 287 | MILFORD IL 60953 |
| 81350 | JOINT ARMY-NAVY SPECIFICATIONS, PROMULGATED BY MILITARY DEPARTMENTS UNDER AUTHORITY OF DEFENSE STANDARD-IZATION MANUAL 4120 3-M | | |
| 83385 | MICRODOT MFG INC<br>GREER-CENTRAL DIV | 3221 W BIG BEAVER RD | TROY MI 48098 |
| 83486 | ELCO INDUSTRIES INC | 1101 SAMUELSON RD | ROCKFORD IL 61101 |
| 85471 | BOYD CORP | 13885 RAMOMA AVE | CHINO CA 91710 |
| 93907 | TEXTRON INC<br>CAMCAR DIV | 600 18TH AVE | ROCKFORD IL 61108-5181 |
| 95987 | BRADY/WECKESSER MFG CO | 4444 WEST IRVING PARK RD | CHICAGO IL 60641 |
| TK0435 | LEWIS SCREW CO | 4300 S RACINE AVE | CHICAGO IL 60609-3320 |
| TK1373 | PATELEC-CEM (ITALY) | 10156 TORINO | VAICENTALLO 62/45S ITALY |
| TK2361 | MULTIPOWER INC | 3005 SW 154TH TERRACE #1 | BEAVERTON OR 97006 |

| Fig. & Index No. | Tektronix Part No. | Serial/Assembly No. Effective | Dscont | Qty | 12345 Name & Description | Mfr. Code | Mfr. Part No. |
|---|---|---|---|---|---|---|---|
| 1-1 | 331-0508-01 | B022000 | B022405 | 1 | SCALE,CRT:BEZEL,VM700 | 80009 | 331-0508-01 |
| | 331-0508-02 | B022406 | B030337 | 1 | SCALE,CRT:FRAME,FRONT (FINISHED) | 80009 | 331-0508-02 |
| | 331-0508-04 | B030338 | | 1 | SCALE,CRT:FRAME,FRONT FINISHED | 80009 | 331-0508-04 |
| | | | | | *MOUNTING PARTS* | | |
| -2 | 211-0517-00 | | | 4 | SCREW,MACHINE:6-32 X 1.0,PNH,STL | 83385 | ORDER BY DESCR |
| -3 | 210-0055-00 | | | 4 | WASHER,LOCK:#6 SPLIT,0.031 THK,STL | 81350 | ORDER BY DESCR |
| -4 | 210-0802-00 | | | 4 | WASHER,FLAT:0.15 ID X 0.312 OD X 0.032,STL | 12327 | ORDER BY DESCR |
| | | | | | *END MOUNTING PARTS* | | |
| -5 | 334-0097-00 | | | 1 | EMBLEM:SLATE GRAY W/STUD | 80009 | 334-0097-00 |
| -6 | 378-0322-00 | | | 2 | FILTER,AIR:FOAM,#1 | 80009 | 378-0322-00 |
| | | | | | *MOUNTING PARTS* | | |
| -7 | 354-0691-00 | B022000 | B022129 | 4 | O-RING:0.070 ID X 0.063,RUBBER | 02697 | 2-004 |
| | 354-0691-01 | B022130 | | 4 | O-RING:0.196 OD X 0.070 ID,ETHYLENE PROPYLENE | 02697 | 2-004 E803-70 |
| | | | | | *END MOUNTING PARTS* | | |
| -8 | 378-0323-00 | | | 1 | FILTER,AIR:FOAM,#2 | 80009 | 378-0323-00 |
| | | | | | *MOUNTING PARTS* | | |
| -9 | 354-0691-00 | B022000 | B022129 | 2 | O-RING:0.070 ID X 0.063,RUBBER | 02697 | 2-004 |
| | 354-0691-01 | B022130 | | 2 | O-RING:0.196 OD X 0.070 ID,ETHYLENE PROPYLENE | 02697 | 2-004 E803-70 |
| | | | | | *END MOUNTING PARTS* | | |
| -10 | 378-0325-00 | | | 1 | FILTER,AIR:FOAM,#4 | 80009 | 378-0325-00 |
| | | | | | *MOUNTING PARTS* | | |
| -11 | 354-0691-00 | B022000 | B022129 | 2 | O-RING:0.070 ID X 0.063,RUBBER | 02697 | 2-004 |
| | 354-0691-01 | B022130 | | 2 | O-RING:0.196 OD X 0.070 ID,ETHYLENE PROPYLENE | 02697 | 2-004 E803-70 |
| | | | | | *END MOUNTING PARTS* | | |
| -12 | 378-0324-00 | | | 1 | FILTER,AIR:FOAM,#3 | 80009 | 378-0324-00 |
| | | | | | *MOUNTING PARTS* | | |
| -13 | 354-0691-00 | B022000 | B022129 | 4 | O-RING:0.070 ID X 0.063,RUBBER | 02697 | 2-004 |
| | 354-0691-01 | B022130 | | 4 | O-RING:0.196 OD X 0.070 ID,ETHYLENE PROPYLENE | 02697 | 2-004 E803-70 |
| | | | | | *END MOUNTING PARTS* | | |
| -14 | 333-3521-00 | | | 1 | PANEL,FRONT: | 80009 | 333-3521-00 |
| -15 | ----- ----- | | | 1 | CIRCUIT BD ASSY:ON/OFF<br>(SEE A16 REPL) | | |
| | | | | | *MOUNTING PARTS* | | |
| -16 | 210-0405-00 | | | 2 | NUT,PLAIN,HEX:2-56 X 0.188,BRS CD PL | 73743 | 12157-50 |
| -17 | 210-0001-00 | | | 2 | WASHER,LOCK:#2 INTL,0.013 THK,STL | 77900 | 1202-00-00-0541C |
| | | | | | *END MOUNTING PARTS* | | |
| -18 | 174-1163-00 | B022000 | B030874 | 1 | CA ASSY,SP,ELEC:5,26 AWG,5.5 L,RIBBON | 80009 | 174-1163-00 |
| | 174-1163-01 | B030875 | | 1 | CA ASSY,SP,ELEC:5,26 AWG,7.7 L,RIBBON | 80009 | 174-1163-01 |
| -19 | ----- ----- | | | 1 | CIRCUIT BD ASSY:FRONT PANEL<br>(SEE A10 REPL) | | |
| | | | | | *MOUNTING PARTS* | | |
| -20 | 212-0040-00 | | | 7 | SCREW,MACHINE:8-32 X 0.375,FLH,100 DEG,STL | 83486 | ORDER BY DESCR |
| | | | | | *END MOUNTING PARTS* | | |
| | | | | | ASSEMBLY INCLUDES: | | |
| -21 | 366-2159-01 | | | 1 | .KNOB:TV GRAY,SCROLL | 80009 | 366-2159-01 |
| -22 | 333-3809-00 | | | 1 | .PANEL,FRONT: | 80009 | 333-3809-00 |
| | | | | | *MOUNTING PARTS* | | |
| -23 | 211-0658-00 | | | 6 | .SCR,ASSEM WSHR:6-32 X 0.312,PNH,STL,POZ | 78189 | S51-060545-0X |
| | | | | | *END MOUNTING PARTS* | | |
| -24 | ----- ----- | | | 1 | .CIRCUIT BD ASSY:KEY<br>.(SEE A10A2 REPL) | | |
| | | | | | *MOUNTING PARTS* | | |
| -25 | 211-0507-00 | | | 6 | .SCREW,MACHINE:6-32 X 0.312,PNH,STL | 83385 | ORDER BY DESCR |
| | | | | | *END MOUNTING PARTS* | | |
| -26 | ----- ----- | | | 1 | .CIRCUIT BD ASSY:FRONT PANEL<br>.(SEE A10A1 REPL) | | |
| | | | | | *MOUNTING PARTS* | | |
| -27 | 211-0658-00 | | | 6 | .SCR,ASSEM WSHR:6-32 X 0.312,PNH,STL,POZ | 78189 | S51-060545-0X |
| | | | | | *END MOUNTING PARTS* | | |
| -28 | 407-3922-00 | | | 1 | .BRACKET,KEY BD:VM700A | 80009 | 407-3922-00 |
| -29 | 337-3662-00 | | | 1 | SHIELD,ELEC:4.96 L,BE CU,CLIP ON,RIGHT | 80009 | 337-3662-00 |
| -30 | ----- ----- | | | 1 | MODULAR SUBASSY:W/TOUCH PANEL<br>(SEE A14 REPL) | | |
| | | | | | *MOUNTING PARTS* | | |
| -31 | 212-0023-00 | | | 4 | SCREW,MACHINE:8-32 X 0.375,PNH,STL | 93907 | ORDER BY DESCR |

| Fig. & Index No. | Tektronix Part No. | Serial/Assembly No. Effective | Dscont | Qty | 12345 Name & Description | Mfr. Code | Mfr. Part No. |
|---|---|---|---|---|---|---|---|
| 1- | | | | | *END MOUNTING PARTS* | | |
| | | | | | ASSEMBLY INCLUDES: | | |
| -32 | 440-3786-01 | | | 1 | .PANEL,CONDCT:ETCHED,CONVEX TYPE 0927 | 80009 | 440-3786-01 |
| | | | | | *MOUNTING PARTS* | | |
| -33 | 213-1014-00 | | | 4 | .SCREW,TPG,TF:10-16 X 0.5,HEX HD,STL,ZN PL | TK0435 | 213-1014-00 |
| -34 | 210-1454-00 | | | 4 | .WASHER,FLAT: | 80009 | 210-1454-00 |
| -35 | 210-1456-00 | | | 4 | .WASHER,SHLDR:0.5 DIA,W/0.203 DIA ID | 80009 | 210-1456-00 |
| | | | | | *END MOUNTING PARTS* | | |
| -36 | 348-0085-00 | | | 1 | .GROMMET,PLASTIC:GRAY,U-SHAPE,0.48 ID | 80009 | 348-0085-00 |
| -37 | 337-3448-00 | | | 1 | .SHIELD,ELEC:CRT | 80009 | 337-3448-00 |
| | | | | | *MOUNTING PARTS* | | |
| -38 | 211-0507-00 | | | 12 | .SCREW,MACHINE:6-32 X 0.312,PNH,STL | 83385 | ORDER BY DESCR |
| -39 | 220-0625-00 | | | 12 | .NUT,SHEET SPR:6-32,STL CD PL,CLIP-ON TYPE | 78553 | C8090-632-24 |
| | | | | | *END MOUNTING PARTS* | | |
| -40 | ----- ----- | | | 1 | .CIRCUIT BD ASSY:TRP | | |
| | | | | | .(SEE A14A1A1 REPL) | | |
| -41 | 441-1814-01 | | | 1 | .CHASSIS,CRT: | 80009 | 441-1814-01 |
| -42 | 337-3648-00 | | | 1 | SHIELD,EMI:CRT | 80009 | 337-3648-00 |
| | | | | | *MOUNTING PARTS* | | |
| -43 | 212-0040-00 | | | 7 | SCREW,MACHINE:8-32 X 0.375,FLH,100 DEG,STL | 83486 | ORDER BY DESCR |
| | | | | | *END MOUNTING PARTS* | | |
| -44 | 337-3660-00 | | | 1 | SHIELD,ELEC:7.46 L,BE CU,CLIP ON,TOP | 80009 | 337-3660-00 |
| -45 | 337-3661-00 | | | 1 | SHIELD,ELEC:6.46 L,BE CU,CLIP ON,LEFT | 80009 | 337-3661-00 |
| -46 | 174-0844-01 | | | 1 | CA ASSY,SP,ELEC:8,22 AWG,16.18 L,RIBBON | 80009 | 174-0844-01 |
| -47 | 407-3613-00 | | | 1 | BRACKET,CA HSG: | 80009 | 407-3613-00 |
| | | | | | *MOUNTING PARTS* | | |
| -48 | 211-0661-00 | | | 1 | SCR,ASSEM WSHR:4-40 X 0.25,PNH,STL,CD PL,PO | 01536 | 821-01655-024 |
| | | | | | Z,MACHINE | | |
| | | | | | *END MOUNTING PARTS* | | |
| -49 | 343-0088-00 | | | 2 | CLAMP,CABLE:0.062 DIA,PLASTIC | 80009 | 343-0088-00 |
| -50 | ----- ----- | | | 1 | POWER SUPPLY:IN 115/230 47-63 HZ, OUT 5V 40 | | |
| | | | | | A, 15V 3A, -15V 3A,12V | | |
| | | | | | (SEE A15 REPL) | | |
| | | | | | *MOUNTING PARTS* | | |
| -51 | 211-0507-00 | | | 6 | SCREW,MACHINE:6-32 X 0.312,PNH,STL | 83385 | ORDER BY DESCR |
| | | | | | *END MOUNTING PARTS* | | |
| -52 | 386-5736-00 | | | 1 | PLATE,COVER:CONNECTOR,ALUMINUM | 80009 | 386-5736-00 |
| | | | | | *MOUNTING PARTS* | | |
| -53 | 211-0661-00 | | | 2 | SCR,ASSEM WSHR:4-40 X 0.25,PNH,STL,CD PL,PO | 01536 | 821-01655-024 |
| | | | | | Z,MACHINE | | |
| | | | | | *END MOUNTING PARTS* | | |
| -54 | 134-0026-00 | | | 1 | BUTTON,PLUG:U/W 0.375 HOLE | 80112 | 1711-M |
| -55 | 334-7221-00 | | | 1 | LABEL:BNC PANEL | 80009 | 334-7221-00 |
| -56 | 337-3653-00 | | | 1 | SHIELD,ELEC:CABLE | 80009 | 337-3653-00 |
| | | | | | *MOUNTING PARTS* | | |
| -57 | 211-0661-00 | | | 6 | SCR,ASSEM WSHR:4-40 X 0.25,PNH,STL,CD PL,PO | 01536 | 821-01655-024 |
| | | | | | Z,MACHINE | | |
| | | | | | *END MOUNTING PARTS* | | |
| -58 | 407-3780-01 | | | 1 | BRACKET,ELEC:ALUMINUM | 80009 | 407-3780-01 |
| | | | | | *MOUNTING PARTS* | | |
| -59 | 211-0504-00 | | | 5 | SCREW,MACHINE:6-32 X 0.250,PNH,STL | TK0435 | ORDER BY DESCR |
| | | | | | *END MOUNTING PARTS* | | |
| -60 | 337-3670-00 | | | 1 | SHIELD,ELEC:CLIP ON,CU-BE,5.25 L | 80009 | 337-3670-00 |
| -61 | 337-3669-00 | | | 1 | SHIELD,ELEC:CLIP ON,CU-BE,9.0 L | 80009 | 337-3669-00 |
| -62 | 337-3532-00 | | | 2 | SHIELD,ELEC:BE CU,CLIP ON,1 X 2 | 80009 | 337-3532-00 |

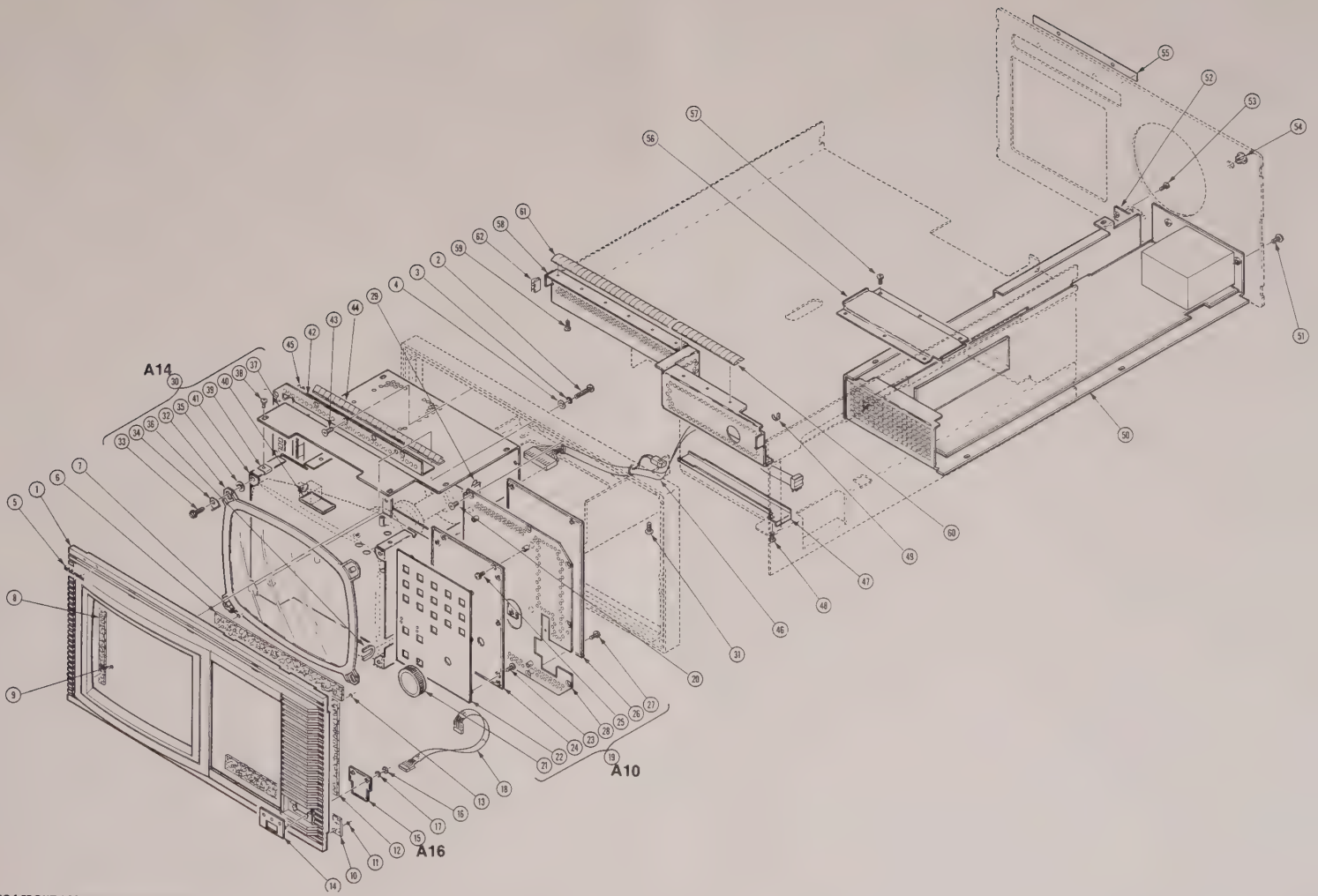


FIG 1 FRONT ASSEMBLIES & PWR SUPPLY

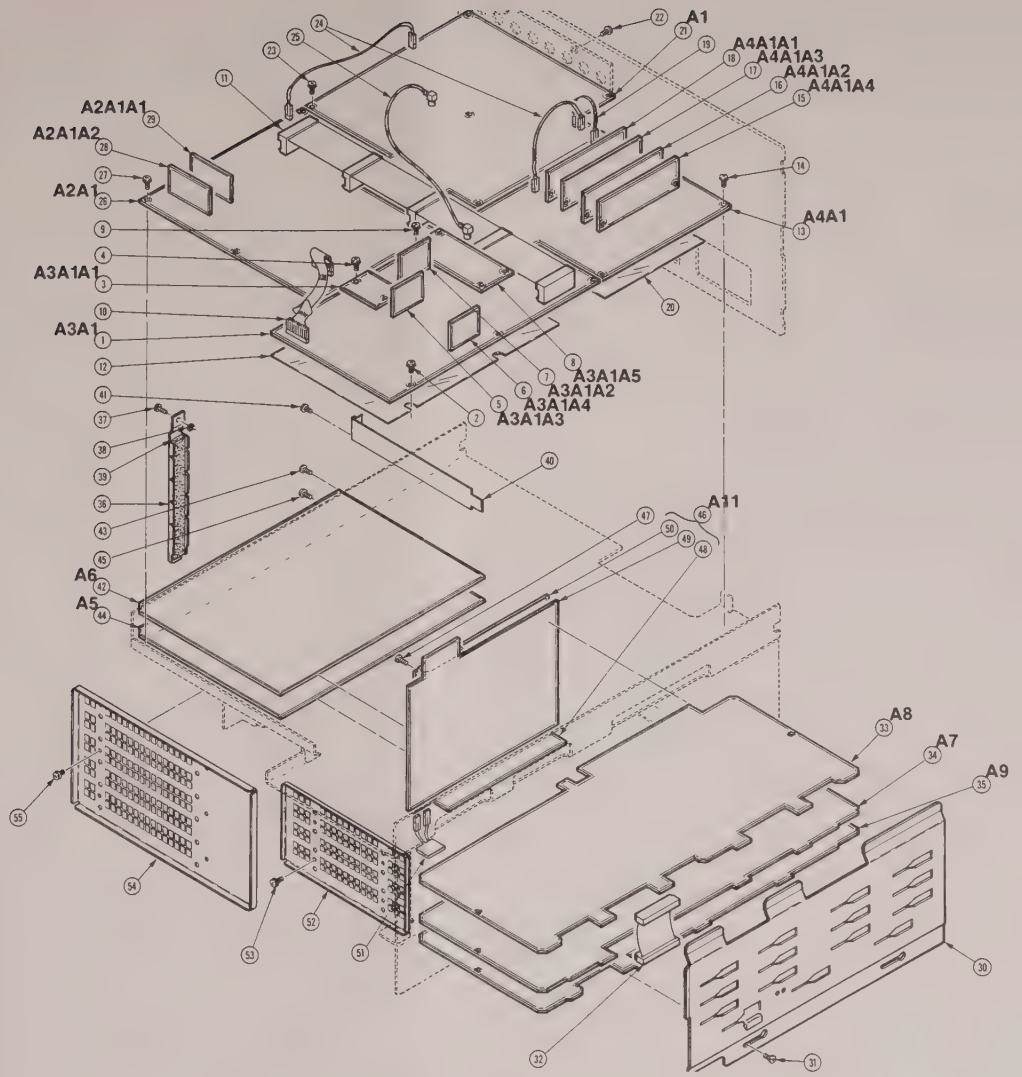




FIG 2 CKT BOARDS

| Fig. & Index No. | Tektronix Part No. | Serial/Assembly No. Effective | Dscont | Qty | 12345 Name & Description | Mfr. Code | Mfr. Part No. |
|---|---|---|---|---|---|---|---|
| 2-1 | ----- ----- | | | 1 | CIRCUIT BD ASSY:ADC<br>(SEE A3A1 REPL)<br>*MOUNTING PARTS* | | |
| -2 | 211-0661-00 | | | 5 | SCR,ASSEM WSHR:4-40 X 0.25,PNH,STL,CD PL,PO Z,MACHINE<br>*END MOUNTING PARTS* | 01536 | 821-01655-024 |
| -3 | ----- ----- | | | 1 | .CIRCUIT BD ASSY:VIDEO DELAY LINE<br>.(SEE A3A1A1 REPL)<br>*MOUNTING PARTS* | | |
| -4 | 211-0008-00 | | | 2 | .SCREW,MACHINE:4-40 X 0.25,PNH,STL<br>*END MOUNTING PARTS* | 93907 | ORDER BY DESCR |
| | | | | | ASSEMBLY INCLUDES: | | |
| -5 | ----- ----- | | | 1 | .CIRCUIT BD ASSY:REFERENCE GEN<br>.(SEE A3A1A3 REPL) | | |
| -6 | ----- ----- | | | 1 | .CIRCUIT BD ASSY:REFERENCE GEN<br>.(SEE A3A1A4 REPL) | | |
| -7 | ----- ----- | | | 1 | .CIRCUIT BD ASSY:REFERENCE GEN<br>.(SEE A3A1A2 REPL) | | |
| -8 | ----- ----- | | | 1 | .CIRCUIT BD ASSY:PAL,ADC FILTER<br>.(SEE A3A1A5 REPL)<br>*MOUNTING PARTS* | | |
| -9 | 211-0008-00 | | | 4 | .SCREW,MACHINE:4-40 X 0.25,PNH,STL<br>*END MOUNTING PARTS* | 93907 | ORDER BY DESCR |
| | | | | | ASSEMBLY INCLUDES: | | |
| -10 | 174-1164-00 | | | 1 | CA ASSY,SP,ELEC:10,26 AWG,6.5 L,RIBBON | 80009 | 174-1164-00 |
| -11 | 174-0837-00 | | | 1 | CA ASSY,SP,ELEC:10,18 AWG,14.05 L,RIBBON | 80009 | 174-0837-00 |
| -12 | 337-3470-00 | | | 1 | SHIELD,ELEC:PROTECTIVE,POLYMIDE,ADC | 80009 | 337-3470-00 |
| | 211-0001-00 | | | 2 | SCREW,MACHINE:2-56 X 0.25,PNH,STL<br>*MOUNTING PARTS* | 93907 | ORDER BY DESCR |
| | 210-0405-00 | | | 4 | NUT,PLAIN,HEX:2-56 X 0.188,BRS CD PL<br>*END MOUNTING PARTS* | 73743 | 12157-50 |
| -13 | ----- ----- | | | 1 | CIRCUIT BD ASSY:FILTER<br>(SEE A4A1 REPL)<br>*MOUNTING PARTS* | | |
| -14 | 211-0661-00 | | | 5 | SCR,ASSEM WSHR:4-40 X 0.25,PNH,STL,CD PL,PO Z,MACHINE<br>*END MOUNTING PARTS* | 01536 | 821-01655-024 |
| | | | | | ASSEMBLY INCLUDES: | | |
| -15 | ----- ----- | | | 1 | .CIRCUIT BD ASSY:LF NOISE FILTER<br>.(SEE A4A1A3 REPL) | | |
| -16 | ----- ----- | | | 1 | .CIRCUIT BD ASSY:DIFF STEP FILTER<br>.(SEE A4A1A2 REPL) | | |
| -17 | ----- ----- | | | 1 | .CIRCUIT BD ASSY:HIGHPASS FILTER<br>.(SEE A4A1A1 REPL) | | |
| -18 | ----- ----- | | | 1 | .CIRCUIT BD ASSY:LOWPASS FILTER<br>.(SEE A4A1A4 REPL) | | |
| -19 | 174-2008-00 | | | 1 | CABLE ASSY,RF:75 OHM COAX,3.75 L,O-N | 80009 | 174-2008-00 |
| -20 | 337-3515-00 | | | 1 | SHIELD,ELEC:POLYMIDE | 80009 | 337-3515-00 |
| -21 | ----- ----- | | | 1 | CIRCUIT BD ASSY:ANALOG INPUT<br>(SEE A1 REPL)<br>*MOUNTING PARTS* | | |
| -22 | 211-0658-00 | | | 2 | SCR,ASSEM WSHR:6-32 X 0.312,PNH,STL,POZ | 78189 | S51-060545-0X |
| -23 | 211-0661-00 | | | 8 | SCR,ASSEM WSHR:4-40 X 0.25,PNH,STL,CD PL,PO Z,MACHINE<br>*END MOUNTING PARTS* | 01536 | 821-01655-024 |
| -24 | 174-1165-00 | | | 2 | CABLE ASSY,RF:75 OHM COAX,7.5 L | 80009 | 174-1165-00 |
| -25 | 174-0843-00 | | | 1 | CABLE ASSY,RF:50 OHM COAX,13.0 L | 80009 | 174-0843-00 |
| -26 | ----- ----- | | | 1 | CIRCUIT BD ASSY:GEN LOCK<br>(SEE A2A1 REPL)<br>*MOUNTING PARTS* | | |
| -27 | 211-0661-00 | | | 7 | SCR,ASSEM WSHR:4-40 X 0.25,PNH,STL,CD PL,PO Z,MACHINE<br>*END MOUNTING PARTS* | 01536 | 821-01655-024 |
| | | | | | ASSEMBLY INCLUDES: | | |
| -28 | ----- ----- | | | 1 | .CIRCUIT BD ASSY:GENLOCK VCO,NTSC<br>.(SEE A2A1A2 REPL) | | |
| -29 | ----- ----- | | | 1 | .CIRCUIT BD ASSY:GENLOCK VCO,PAL<br>.(SEE A2A1A1 REPL) | | |
| -30 | 343-1331-01 | | | 1 | RETAINER,CKT BD:RIGHT | 80009 | 343-1331-01 |

| Fig. & Index No. | Tektronix Part No. | Serial/Assembly No. Effective | Dscont | Qty | 12345 | Name & Description | Mfr. Code | Mfr. Part No. |
|---|---|---|---|---|---|---|---|---|
| 2- | | | | | | *MOUNTING PARTS* | | |
| -31 | 211-0507-00 | | | 2 | | SCREW,MACHINE:6-32 X 0.312,PNH,STL | 83385 | ORDER BY DESCR |
| | | | | | | *END MOUNTING PARTS* | | |
| -32 | 174-0840-00 | | | 1 | | CA ASSY,SP,ELEC:34,28 AWG,2.0 L,RIBBON | 80009 | 174-0840-00 |
| -33 | ----- ----- | | | 1 | | CIRCUIT BD ASSY:CONTROLLER (SEE A8 REPL) | | |
| -34 | ----- ----- | | | 1 | | CIRCUIT BD ASSY:DATA ACQUISITION 2 (SEE A7 REPL) | | |
| -35 | ----- ----- | | | 1 | | CIRCUIT BD ASSY:DISPLAY MEMORY II (SEE A9 REPL) | | |
| -36 | 343-1328-00 | | | 1 | | RTNR,CKT BOARD: | 80009 | 343-1328-00 |
| -37 | 213-0919-00 | | | 1 | | THUMBSCREW:6-32,0.312 X 0.25 OD,SST | 80009 | 213-0919-00 |
| | | | | | | *MOUNTING PARTS* | | |
| -38 | 354-0163-00 | | | 1 | | RING,RETAINING:TYPE E EXT,U/O 0.125 ID SFT | 79136 | 5133-12ZD |
| | | | | | | *END MOUNTING PARTS* | | |
| -39 | 348-0102-00 | | | 1 | | PAD,CUSHIONING:13.76 X 0.67 X 0.188,RUBBER | 80009 | 348-0102-00 |
| -40 | 386-5592-00 | | | 3 | | PANEL,BLANK: | 80009 | 386-5592-00 |
| | | | | | | *MOUNTING PARTS* | | |
| -41 | 211-0661-00 | | | 3 | | SCR,ASSEM WSHR:4-40 X 0.25,PNH,STL,CD PL,PO Z,MACHINE | 01536 | 821-01655-024 |
| | | | | | | *END MOUNTING PARTS* | | |
| -42 | ----- ----- | | | 1 | | CIRCUIT BD ASSY:EPROM (SEE A6 REPL) | | |
| | | | | | | *MOUNTING PARTS* | | |
| -43 | 211-0661-00 | | | 1 | | SCR,ASSEM WSHR:4-40 X 0.25,PNH,STL,CD PL,PO Z,MACHINE | 01536 | 821-01655-024 |
| | | | | | | *END MOUNTING PARTS* | | |
| -44 | ----- ----- | | | 1 | | CIRCUIT BD ASSY:CPU II (SEE A5 REPL) | | |
| | | | | | | *MOUNTING PARTS* | | |
| -45 | 211-0661-00 | | | 1 | | SCR,ASSEM WSHR:4-40 X 0.25,PNH,STL,CD PL,PO Z,MACHINE | 01536 | 821-01655-024 |
| | | | | | | *END MOUNTING PARTS* | | |
| -46 | ----- ----- | | | 1 | | CIRCUIT BD ASSY:MOTHER (SEE A11 REPL) | | |
| | | | | | | *MOUNTING PARTS* | | |
| -47 | 211-0661-00 | | | 6 | | SCR,ASSEM WSHR:4-40 X 0.25,PNH,STL,CD PL,PO Z,MACHINE | 01536 | 821-01655-024 |
| | | | | | | *END MOUNTING PARTS* | | |
| | | | | | | ASSEMBLY INCLUDES: | | |
| -48 | ----- ----- | | | 1 | | .CIRCUIT BD ASSY:BUS INTERCONNECT .(SEE A11A1 REPL) | | |
| -49 | ----- ----- | | | 1 | | .CIRCUIT BD ASSY:MAIN INTERFACE,RIGHT .(SEE A11A2 REPL) | | |
| -50 | ----- ----- | | | 1 | | .CIRCUIT BD ASSY:MAIN INTERFACE,LEFT .(SEE A11A3 REPL) | | |
| -51 | ----- ----- | B022000 | B030874 | 1 | | CA ASSY,SP,ELEC:2,26 AWG,3.75 L,RIBBON | | |
| | ----- ----- | B030875 | | 1 | | CA ASSY,SP,ELEC:2,26 AWG,4.50 L,RIBBON (SEE W252 REPL) | | |
| -52 | | | | | | (PART OF 441-1729-01 CHASSIS ASSEMBLY) | | |
| | | | | | | *MOUNTING PARTS* | | |
| | 337-3658-00 | B022000 | B022476 | 1 | | SHIELD,ELEC:RIGHT,ALUMINUM | 80009 | 337-3658-00 |
| -53 | 211-0507-00 | | | 4 | | SCREW,MACHINE:6-32 X 0.312,PNH,STL | 83385 | ORDER BY DESCR |
| | | | | | | (PART OF 441-1729-01 CHASSIS ASSEMBLY) | | |
| | | | | | | *END MOUNTING PARTS* | | |
| -54 | | | | | | (PART OF 441-1729-01 CHASSIS ASSEMBLY) | | |
| | | | | | | *MOUNTING PARTS* | | |
| | 337-3656-00 | B022000 | B022476 | 1 | | SHIELD,ELEC:LEFT,ALUMIMUM | 80009 | 337-3656-00 |
| -55 | 211-0507-00 | | | 6 | | SCREW,MACHINE:6-32 X 0.312,PNH,STL | 83385 | ORDER BY DESCR |
| | | | | | | (PART OF 441-1729-01 CHASSIS ASSEMBLY) | | |
| | | | | | | *END MOUNTING PARTS* | | |

| Fig. & Index No. | Tektronix Part No. | Serial/Assembly No. Effective | Dscont | Qty | 12345 Name & Description | Mfr. Code | Mfr. Part No. |
|---|---|---|---|---|---|---|---|
| 3- | 441-1729-01 | B022000 | B022476 | 1 | CHASSIS ASSY: | 80009 | 441-1729-01 |
| | 441-1729-02 | B022477 | B030874 | 1 | CHASSIS ASSY:VM700A | 80009 | 441-1729-02 |
| | 441-1729-03 | B030875 | | 1 | CHASSIS ASSY:VM700A | 80009 | 441-1729-03 |
| -1 | 407-3649-00 | | | 1 | .BRKT,MTG,CRT: | 80009 | 407-3649-00 |
| | | | | | *MOUNTING PARTS* | | |
| -2 | 212-0040-00 | | | 2 | .SCREW,MACHINE:8-32 X 0.375,FLH,100 DEG,STL | 83486 | ORDER BY DESCR |
| -3 | 211-0507-00 | | | 3 | .SCREW,MACHINE:6-32 X 0.312,PNH,STL | 83385 | ORDER BY DESCR |
| | | | | | *END MOUNTING PARTS* | | |
| -4 | 426-1629-03 | | | 1 | .FRAME,CABINET:OPEN FR,8.75 FULL RACK,FINISH .ED,VM700A | 80009 | 426-1629-03 |
| | | | | | *MOUNTING PARTS* | | |
| -5 | 213-0760-00 | | | 4 | .SCREW,TPG,TF:8-32 X 0.875,SPCL TAPTITE,FILH .,STL | 72228 | ORDER BY DESCR |
| | | | | | *END MOUNTING PARTS* | | |
| -6 | 426-2204-00 | | | 1 | .FRAME SECT,CAB.: | 80009 | 426-2204-00 |
| | | | | | *MOUNTING PARTS* | | |
| -7 | 211-0507-00 | | | 1 | .SCREW,MACHINE:6-32 X 0.312,PNH,STL | 83385 | ORDER BY DESCR |
| | | | | | *END MOUNTING PARTS* | | |
| -8 | 426-2203-00 | | | 1 | .FRAME SECT,CAB.: | 80009 | 426-2203-00 |
| | | | | | *MOUNTING PARTS* | | |
| -9 | 211-0507-00 | | | 3 | .SCREW,MACHINE:6-32 X 0.312,PNH,STL | 83385 | ORDER BY DESCR |
| | | | | | *END MOUNTING PARTS* | | |
| -10 | 426-2202-00 | | | 2 | .FRAME SECT,CAB.: | 80009 | 426-2202-00 |
| | | | | | *MOUNTING PARTS* | | |
| -11 | 211-0507-00 | | | 7 | .SCREW,MACHINE:6-32 X 0.312,PNH,STL | 83385 | ORDER BY DESCR |
| | | | | | *END MOUNTING PARTS* | | |
| -12 | 124-0430-00 | | | 4 | .STRIP,TRIM:CORNER,W/STEP,20.0 | 80009 | 124-0430-00 |
| -13 | 348-0632-00 | | | 4 | .SHLD GSKT,ELEK:FINGER TYPE,19.0 L,CORNER | 52961 | ORDER BY DESCR |
| -14 | 348-0633-00 | | | 4 | .SHLD GSKT,ELEK:FINGER TYPE,19.0 L,CORNER | 52961 | ORDER BY DESCR |
| -15 | 343-1070-00 | | | 8 | .RTNR,ELEK SHLD:STAINLESS STEEL | 80009 | 343-1070-00 |
| -16 | | | | | *MOUNTING PARTS* | | |
| | 333-3520-01 | B022000 | B030874 | 1 | .PANEL,REAR: | 80009 | 333-3520-01 |
| | 333-3520-02 | B030875 | | 1 | .PANEL,REAR:VM700A | 80009 | 333-3520-02 |
| -17 | 211-0507-00 | | | 4 | .SCREW,MACHINE:6-32 X 0.312,PNH,STL | 83385 | ORDER BY DESCR |
| -18 | 213-0808-00 | | | 4 | .SCREW,TPG,TR:8-32 X 0.625 L,TAPTITE,FILH | 83486 | 239-006-408062 |
| | | | | | *END MOUNTING PARTS* | | |
| -19 | 200-2222-00 | | | 1 | .GUARD,FAN: | 81041 | 6-182-033 |
| -20 | 119-2616-02 | | | 1 | .FAN:24VDC,28A,6.7W,W/LEADS 17.0L,VM700 | 80009 | 119-2616-02 |
| | | | | | *MOUNTING PARTS* | | |
| -21 | 212-0010-00 | | | 4 | .SCREW,MACHINE:8-32 X 0.625,PNH,STL | 83385 | ORDER BY DESCR |
| -22 | 210-0458-00 | | | 4 | .NUT,PL,ASSEM WA:8-32 X 0.344,STL CD PL | 78189 | 511-081800-00 |
| | | | | | *END MOUNTING PARTS* | | |
| -23 | 348-0014-00 | | | 4 | .FOOT,CABINET:BLACK PHENOLIC | 80009 | 348-0014-00 |
| | | | | | *MOUNTING PARTS* | | |
| -24 | 212-0010-00 | | | 4 | .SCREW,MACHINE:8-32 X 0.625,PNH,STL | 83385 | ORDER BY DESCR |
| | | | | | *END MOUNTING PARTS* | | |
| -25 | 348-0276-01 | | | 6 | .SHLD GSKT,ELEK:MESH TYPE,0.124 OD,7.442 L | 80009 | 348-0276-01 |
| -26 | 252-0571-00 | | | 1 | .NEOPRENE EXTR:CHAN,0.234 X 0.156 | 85471 | ORDER BY DESCR |
| -27 | 348-0150-00 | | | 1 | .GROMMET,PLASTIC:DK GRAY,U-SHAPE,0.66 ID | 80009 | 348-0150-00 |
| -28 | 351-0602-00 | | | 10 | .GUIDE,CKT BOARD:MAIN CHASSIS,POLYAMIDE | 80009 | 351-0602-00 |
| -29 | 351-0752-00 | | | 8 | .GUIDE,LIGHT:ACRYLIC GRATICULE | 80009 | 351-0752-00 |
| -30 | 407-3687-00 | | | 1 | .BRACKET,AIR:ALUMINUM | 80009 | 407-3687-00 |
| | | | | | *MOUNTING PARTS* | | |
| -31 | 211-0507-00 | | | 1 | .SCREW,MACHINE:6-32 X 0.312,PNH,STL | 83385 | ORDER BY DESCR |
| | | | | | *END MOUNTING PARTS* | | |
| -32 | 351-0817-00 | | | 5 | .GUIDE,CKT BD:NYLON,6.0 L | 80009 | 351-0817-00 |
| -33 | 348-0089-00 | | | 3 | .BUMPER,PLASTIC:0.312 DIA X 0.855 L,BLACK | 80009 | 348-0089-00 |
| -34 | 426-2221-04 | B022000 | B022476 | 1 | .FRAME ASSEMBLY: | 80009 | 426-2221-04 |
| | 426-2221-05 | B022477 | | 1 | .FRAME ASSEMBLY:VM700A | 80009 | 426-2221-05 |

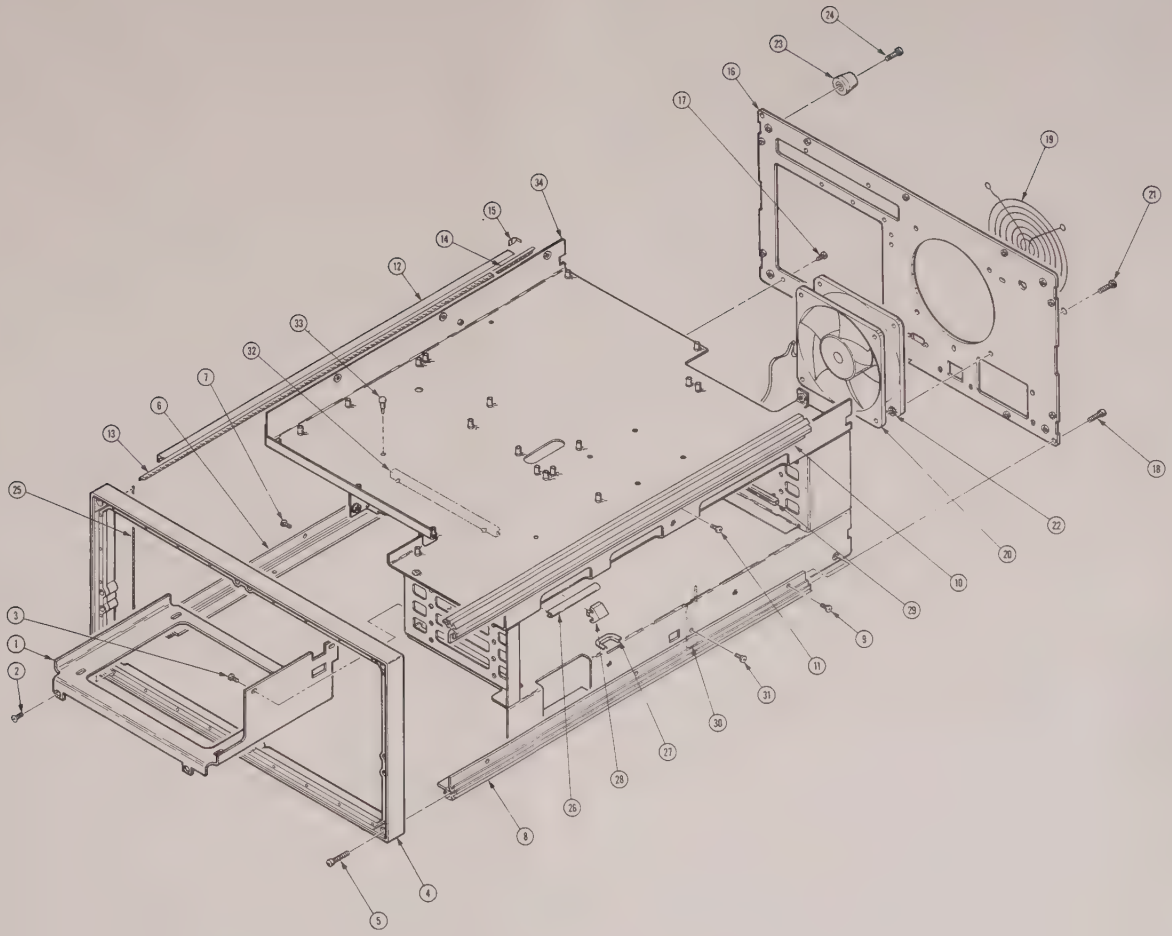

FIG 3 CHASSIS ASSEMBLY

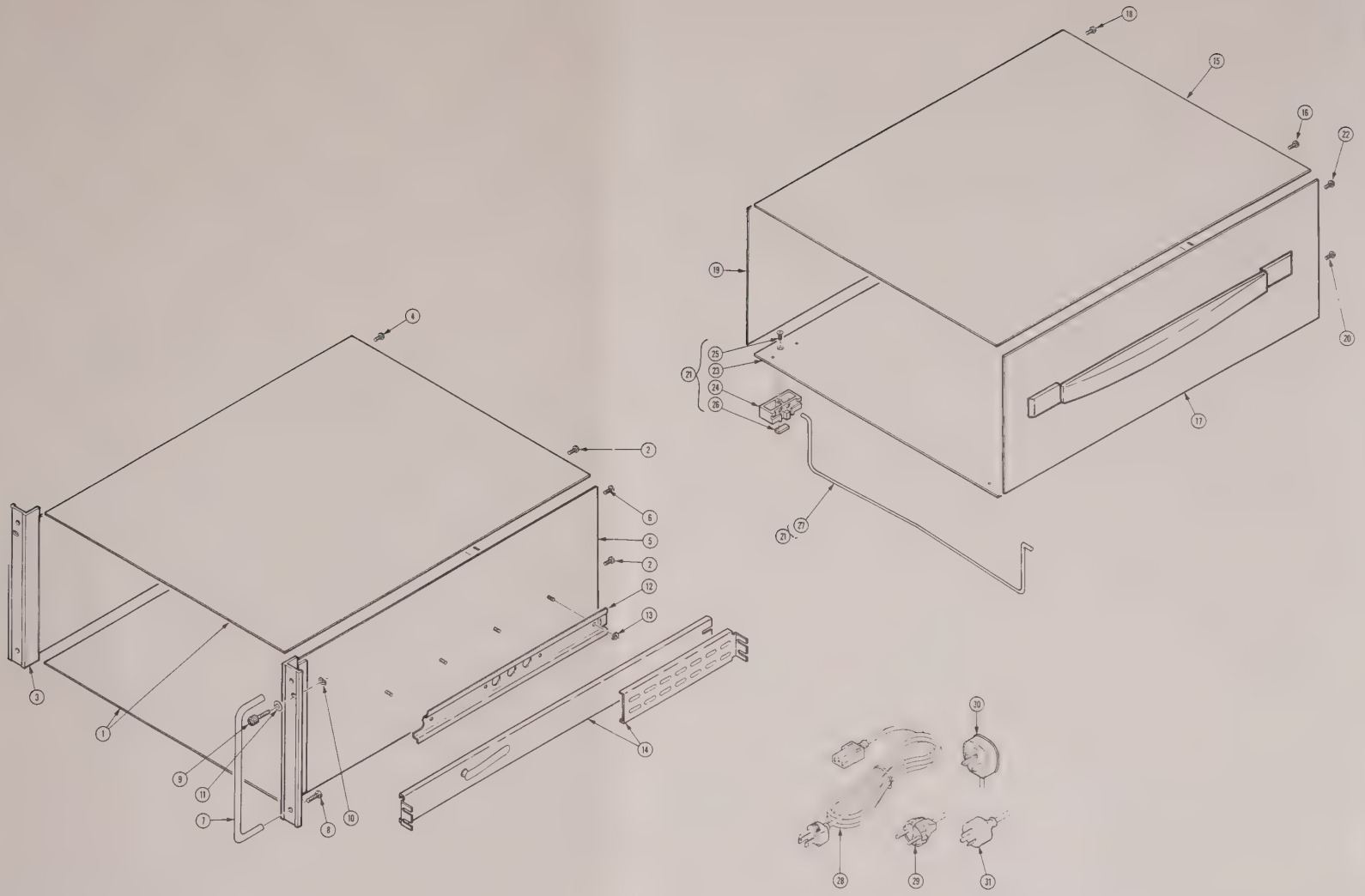
18
15
16
22
19
20
25
23
21
24
26
17
21
27
4
2
6
5
2
12
13
3
1
14
9
11
7
8
10
30
28
29
31

| Fig. & Index No. | Tektronix Part No. | Serial/Assembly No. Effective | Dscont | Qty | 12345 Name & Description | Mfr. Code | Mfr. Part No. |
|---|---|---|---|---|---|---|---|
| 4-1 | 390-1020-00 | B010100 | B030487 | 2 | CABINET,COVER:RACK MOUNT,TOP & BOTTOM | 80009 | 390-1020-00 |
| | 390-1020-03 | B030488 | | 2 | CABINET,COVER:RACK MOUNT,TOP & BOTTOM | 80009 | 390-1020-03 |
| | | | | | *MOUNTING PARTS* | | |
| -2 | 211-0658-00 | | | 4 | SCR,ASSEM WSHR:6-32 X 0.312,PNH,STL,POZ | 78189 | S51-060545-0X |
| | | | | | *END MOUNTING PARTS* | | |
| -3 | 390-1023-00 | | | 1 | CAB.,SIDE ASSY:LEFT,RACK MOUNT | 80009 | 390-1023-00 |
| | | | | | *MOUNTING PARTS* | | |
| -4 | 211-0658-00 | | | 2 | SCR,ASSEM WSHR:6-32 X 0.312,PNH,STL,POZ | 78189 | S51-060545-0X |
| | | | | | *END MOUNTING PARTS* | | |
| -5 | 390-1022-00 | | | 1 | CAB.,SIDE ASSY:RIGHT,RACK MOUNT | 80009 | 390-1022-00 |
| | | | | | *MOUNTING PARTS* | | |
| -6 | 211-0658-00 | | | 2 | SCR,ASSEM WSHR:6-32 X 0.312,PNH,STL,POZ | 78189 | S51-060545-0X |
| | | | | | *END MOUNTING PARTS* | | |
| -7 | 367-0366-00 | | | 2 | HANDLE,CARRYING: | 80009 | 367-0366-00 |
| | | | | | *MOUNTING PARTS* | | |
| -8 | 212-0509-00 | B022000 | B022531 | 4 | SCREW,MACHINE:10-32 X 0.625,PNH,STL | TK0435 | ORDER BY DESCR |
| | 211-0755-00 | B022532 | | 4 | SCREW,MACHINE:10-32 X 0.5,PNH,POZI,STAINLES S STEEL,PASIVATED | 80009 | 211-0755-00 |
| | | | | | *END MOUNTING PARTS* | | |
| -9 | 213-0940-00 | | | 2 | THUMBSCREW:10-32 X 1.15,0.375 OD,SST | 80009 | 213-0940-00 |
| | | | | | *MOUNTING PARTS* | | |
| -10 | 354-0025-00 | | | 2 | RING,RETAINING:EXTERNAL,U/O 0.187 DIA SFT | 79136 | 5555-18 |
| | | | | | *END MOUNTING PARTS* | | |
| -11 | 210-0894-00 | | | 2 | WASHER,FLAT:0.19 ID X 0.438 OD X 0.031 | 09422 | ORDER BY DESCR |
| -12 | 351-0104-03 | | | 1 | SL SECT,DWR EXT:12.625 L,W/O HARDWARE | 06666 | C-720-3 |
| | | | | | *MOUNTING PARTS* | | |
| -13 | 210-0458-00 | | | 8 | NUT,PL,ASSEM WA:8-32 X 0.344,STL CD PL | 78189 | 511-081800-00 |
| | | | | | *END MOUNTING PARTS* | | |
| -14 | 351-0636-00 | | | 1 | SLIDE,DWR,EXT:20.0 X 1.69,PAIR,R&L | 80009 | 351-0636-00 |
| | ----- ----- | | | 1 | VM7FC1:PORTABLE CABINET | | |
| -15 | 390-1020-02 | B010100 | B030487 | 1 | CABINET,TOP:PORTABLE VM700 | 80009 | 390-1020-02 |
| | 390-1020-04 | B030488 | | 1 | CABINET,TOP:PORTABLE,VM700 | 80009 | 390-1020-04 |
| | | | | | *MOUNTING PARTS* | | |
| -16 | 211-0658-00 | | | 2 | SCR,ASSEM WSHR:6-32 X 0.312,PNH,STL,POZ | 78189 | S51-060545-0X |
| | | | | | *END MOUNTING PARTS* | | |
| -17 | 390-1028-00 | B010100 | B030487 | 1 | CAB.,SIDE ASSY:RIGHT,PORTABLES | 80009 | 390-1028-00 |
| | 390-1028-01 | B030488 | | 1 | CAB.,SIDE ASSY:RIGHT,PORTABLE | 80009 | 390-1028-01 |
| | | | | | *MOUNTING PARTS* | | |
| -18 | 211-0658-00 | | | 2 | SCR,ASSEM WSHR:6-32 X 0.312,PNH,STL,POZ | 78189 | S51-060545-0X |
| | | | | | *END MOUNTING PARTS* | | |
| -19 | 390-1025-00 | B010100 | B030487 | 1 | CABINET,SIDE: | 80009 | 390-1025-00 |
| | 390-1025-01 | B030488 | | 1 | CABINET,SIDE:LEFT,PORTABLE,VM700A | 80009 | 390-1025-01 |
| | | | | | *MOUNTING PARTS* | | |
| -20 | 211-0658-00 | | | 2 | SCR,ASSEM WSHR:6-32 X 0.312,PNH,STL,POZ | 78189 | S51-060545-0X |
| | | | | | *END MOUNTING PARTS* | | |
| -21 | 390-1021-01 | B010100 | B030487 | 1 | CABINET ASSY:BOTTOM,PORTABLE | 80009 | 390-1021-01 |
| | 390-1021-03 | B030488 | | 1 | CABINET ASSY:BOTTOM,PORTABLE | 80009 | 390-1021-03 |
| | | | | | *MOUNTING PARTS* | | |
| -22 | 211-0658-00 | | | 2 | SCR,ASSEM WSHR:6-32 X 0.312,PNH,STL,POZ | 78189 | S51-060545-0X |
| | | | | | *END MOUNTING PARTS* | | |
| | | | | | ASSEMBLY INCLUDES: | | |
| -23 | 390-1021-00 | B010100 | B030487 | 1 | .CABINET,BOTTOM:PORTABLE | 80009 | 390-1021-00 |
| | 390-1021-01 | B030488 | | 1 | .CABINET ASSY:BOTTOM,PORTABLE | 80009 | 390-1021-01 |
| -24 | 348-0879-01 | | | 4 | .FOOT,CABINET:BOTTOM,BLACK,POLYCARBONATE | 80009 | 348-0879-01 |
| | | | | | *MOUNTING PARTS* | | |
| -25 | 211-0538-00 | | | 4 | .SCREW,MACHINE:6-32 X 0.312,FLH,100 DEG,STL | 93907 | ORDER BY DESCR |
| | | | | | *END MOUNTING PARTS* | | |
| -26 | 348-0596-00 | | | 4 | .PAD,CAB.FOOT:0.69 X 0.255 X 0.06,PU | 80009 | 348-0596-00 |
| -27 | 348-0988-00 | | | 4 | .FLIPSTAND,CAB.: | 80009 | 348-0988-00 |
| | 200-3634-00 | B022000 | B022883 | 1 | COVER,PROT:17.164 X 9.0,PLASTIC | 80009 | 200-3634-00 |
| | 200-3634-01 | B022884 | | 1 | COVER,PROT:17.164 X 9.0,PLASTIC | 80009 | 200-3634-01 |
| -28 | 161-0066-00 | | | 1 | CABLE ASSY,PWR,:3,18AWG,98 L,SVT,GREY/BLK,6 0 DEG C,IEC BME X STR,IEC RCPT,10A/125V;,, (STANDARD ONLY) | 80009 | 161-0066-00 |
| | 011-0102-01 | | | 1 | TERMN,COAXIAL:75 OHM,BNC | 80009 | 011-0102-01 |
| | 070-8165-00 | | | 1 | MANUAL,TECH:SVC,VM700A,OPT 01,11,VIDEO MEAS UREMENT SET | 80009 | 070-8165-00 |
| | 070-8166-00 | | | 1 | MANUAL,TECH:OPER,VM700A,OPT 01 & 11,VIDEO M EASUREMENT SET | 80009 | 070-8166-00 |

| Fig. & Index No. | Tektronix Part No. | Serial/Assembly No. Effective | Dscont | Qty | 12345 Name & Description | Mfr. Code | Mfr. Part No. |
|---|---|---|---|---|---|---|---|
| 4- | 159-0149-00 | B022000 | | 1 | FUSE,CARTRIDGE:4 A,250 V, SLOW BLOW (FOR 119-2630-XX POWER SUPPLY) | 75915 | 326.004 |
| | 159-0005-00 | B030875 | | 1 | FUSE,CARTRIDGE:3AG,3A,250V,30SEC,CER (FOR 119-4258-XX POWER SUPPLY) | 71400 | MSL-3 |
| | 210-0863-00 | | | 1 | WSHR,LOOP CLAMP:0.091 ID U/W 0.5 W CLP,STL CD PL | 95987 | C191 |
| | 343-0136-00 | | | 1 | CLAMP,LOOP:0.25 ID,PLASTIC | 80009 | 343-0136-00 |
| | | | | | OPTIONAL ACCESSORIES | | |
| -29 | 161-0066-09 | | | 1 | CABLE ASSY,PWR,:3,0.75MM SQ,220V,99.0 L (EUROPEAN OPTION A1 ONLY) | 80009 | 161-0066-09 |
| -30 | 161-0066-10 | | | 1 | CABLE ASSY,PWR,: (UNITED KINGDOM OPTION A2 ONLY) | TK1373 | 24230 |
| -31 | 161-0066-11 | | | 1 | CABLE ASSY,PWR,:3,0.75MM,240V,96.0 L (AUSTRALIAN OPTION A3 ONLY) | 80009 | 161-0066-11 |
| | 118-7818-00 | B010100 | B030426 | 1 | PRINTER:24 PIN,DOT MATRIX COMPUTER | 80009 | 118-7818-00 |
| | 118-8792-00 | B030427 | | 1 | PRINTER:SAFETY CONTROLLED | 80009 | 118-8792-00 |
| | 174-1352-00 | B010100 | B030426 | 1 | CA ASSY,SP,ELEC:6,28 AWG,74.0 L | 80009 | 174-1352-00 |
| | 174-2740-00 | B030427 | | 1 | CA ASSY,SP,ELEC:,RS-232;4,28 AWG,72 INCH,25 POS FEMALE D-SUB X 25 POS MALE D-SUB;,, | 80009 | 174-2740-00 |
| | 018-0225-00 | B030427 | | 1 | CIRCUIT BD ASSY:SERIAL INTERFACE CARD W/MANUAL | 80009 | 018-0225-00 |

# VM700A Problem Report Form

Name:

Company:

Address:

City: State: Zip:

Country:

Instrument Serial # (found on rear of instrument):

Firmware Version (found on rear of instrument):

Hardware Version (found on rear of instrument):

Problem Description:

Please do not write outside the border

Please
Remove
Sheet
From
Manual
At
Perforation

Please fold sheet exactly in half and tape at bottom of sheet

NO POSTAGE
NECESSARY
IF MAILED
IN THE
UNITED STATES

**BUSINESS REPLY MAIL**

FIRST CLASS PERMIT NO. 1 BEAVERTON, OR

POSTAGE WILL BE PAID BY ADDRESSEE

TEKTRONIX, INC.
VM700A Marketing
Del. Sta. 58-639
P.O. BOX 500
BEAVERTON, OR 97075-9959

# VM700A Problem Report Form

Name:

Company:

Address:

City: State: Zip:

Country:

Instrument Serial # (found on rear of instrument):

Firmware Version (found on rear of instrument):

Hardware Version (found on rear of instrument):

Problem Description:

Please do not write outside the border

Please
Remove
Sheet
From
Manual
At
Perforation

Please fold sheet exactly in half and tape at bottom of sheet

NO POSTAGE
NECESSARY
IF MAILED
IN THE
UNITED STATES

**BUSINESS REPLY MAIL**

FIRST CLASS PERMIT NO. 1 BEAVERTON, OR

POSTAGE WILL BE PAID BY ADDRESSEE

TEKTRONIX, INC.
VM700A Marketing
Del. Sta. 58-639
P.O. BOX 500
BEAVERTON, OR 97075-9959

# VM700A Problem Report Form

Name:

Company:

Address:

City: State: Zip:

Country:

Instrument Serial # (found on rear of instrument):

Firmware Version (found on rear of instrument):

Hardware Version (found on rear of instrument):

Problem Description:

Please do not write outside the border

Please
Remove
Sheet
From
Manual
At
Perforation

Please fold sheet exactly in half and tape at bottom of sheet

NO POSTAGE
NECESSARY
IF MAILED
IN THE
UNITED STATES

**BUSINESS REPLY MAIL**

FIRST CLASS PERMIT NO. 1 BEAVERTON, OR

POSTAGE WILL BE PAID BY ADDRESSEE

TEKTRONIX, INC.
VM700A Marketing
Del. Sta. 58-639
P.O. BOX 500
BEAVERTON, OR 97075-9959

## MANUAL CHANGE INFORMATION

At Tektronix, we continually strive to keep up with latest electronic developments by adding circuit and component improvements to our instruments as soon as they are developed and tested.

Sometimes, due to printing and shipping requirements, we can't get these changes immediately into printed manuals. Hence, your manual may contain new change information on following pages.

A single change may affect several sections. Since the change information sheets are carried in the manual until all changes are permanently entered, some duplication may occur. If no such change pages appear following this page, your manual is correct as printed.

Tektronix

# MANUAL CHANGE INFORMATION

Group Code 21

Date: 2–4–93 Change Reference: M79132

Product: VM700A Video Measurement Set Service Manual Manual Part No: 070–8165–00

DESCRIPTION

**Note**

*The part number for A4A1U898 is changing due to non–availability of the original part. New and old part numbers are directly interchangeable, and existing stock may be used.*

## REPLACEABLE ELECTRICAL PARTS LIST CHANGES

**Change to read:**

| Component Nr. | Tektronix Part No. | Name and Description |
|---|---|---|
| A4 | 672–1344–02 | CIRCUIT BOARD ASSY:FILTER SW |
| A4A1 | 671–0695–03 | CIRCUIT BOARD ASSY:FILTER |
| A4A1U898 | 160–5572–01 | IC DIGITAL:CMOS,22V10–25,PRGM |

## SCHEMATIC CHANGES

**On Diagram 17:** Change the nomenclature of A4A1U898 to read GAL 22V10–25.

Tektronix

# MANUAL CHANGE INFORMATION

Group Code 21

Date: 2–9–93 Change Reference: M78999–REV 2

Product: VM700A Video Measurement Set Service Manual Manual Part No: 070–8165–00

DESCRIPTION

EFF. VM700A Display Memory II circuit boards 671–0533–06 and 671–2607–01 (Option 21)

**NOTE:** The new parts are not direct replacements individually for the changed components. All the parts listed must be replaced as a unit to effect a repair if any one of the new parts is used. Also for board versions below 671–0533–05, the older parts must be used; the newer ICs will not work in the older board.

## REPLACEABLE ELECTRICAL PARTS LIST CHANGES

### Change the parts list to read as follows:

| Component Nr. | Tektronix Part No. | Name and Description |
|---|---|---|
| A9 | 671–0533–06 | CIRCUIT BD ASSY: DISPLAY MEMORY II |
| A9 | 671–2607–01 | CIRCUIT BD ASSY: DISPLAY MEMORY II (OPTION 21) |
| A9R798 | 322–3085–00 | RESISTOR FXD, 75Ω, 1%, 0.20 W |
| A9R945 | 322–3075–00 | RESISTOR FXD, 59Ω, 1%, 0.20W |
| A9R946 | 322–3085–00 | RESISTOR FXD, 75Ω, 1%, 0.20 W |
| A9R964 | 322–3085–00 | RESISTOR FXD, 75Ω, 1%, 0.20 W |
| A9U524 | 160–6630–01 | MICROCKT,DGTL,PAL 20V8B–20, PRGM |
| A9U674 | 160–5091–01 | MICROCKT,DGTL,GAL 22V10–15, PRGM |
| A9U786 | 160–6096–01 | MICROCKT,DGTL,GAL 16V8–15, PRGM |
| A9U868 | 160–5092–01 | MICROCKT,DGTL,GAL 22V10–25, PRGM |
| A9U946 | 160–6097–01 | MICROCKT,DGTL,GAL 16V8–25, PRGM |

## SCHEMATIC DIAGRAM CHANGES

### Make the following schematic diagram changes:

Change the nomenclature for A9U674 on diagram 48.

Change the nomenclature for A9U524 on diagram 49.

Change the resistor values for A9R945, A9R946, and A9R964 the nomenclature for A9U868 and A9U946 on schematic diagram 51.

Change the resisitor value for A9R798 and the nomenclature for A9U786 on diagram 52.

Group Code 21

Tektronix

# MANUAL CHANGE INFORMATION

Group Code 21

Date: 1–20–93 Change Reference: M76917

Product: VM700A Video Measurement Set Service Manual Manual Part No: 070–8165–00

DESCRIPTION

EFF. VM700A Serial Number B031030

## REPLACEABLE ELECTRICAL PARTS LIST CHANGES

**Change the following part numbers:**

| Component Nr. | Tektronix Part No. | Name and Description |
|---|---|---|
| A15 | 119–4258–01 | POWER SUPPLY:IN 115/230 47–63 HZ, OUT 5V 40A, 15V 3A, –15V 3A, 12V 2.5A, –5.2V 2A, VAR FAN OUT 12–24V |
| A15A1C157 | 283–0198–00 | CAPACITOR,FXD,CER DI; 0.22UF |
| A15A1C158 | 283–0198–00 | CAPACITOR,FXD,CER DI; 0.22UF |
| A15A1C290 | 285–1381–00 | CAPACITOR,FXD,MTLZD; 1500PF,10%,250V Y RATED |
| A15A1C291 | 285–1381–00 | CAPACITOR,FXD,MTLZD; 1500PF,10%,250V Y RATED |
| A15A1T2 | 120–1911–01 | TRANSFORMER; PWR |
| A15A1W20 | 176–0120–00 | WIRE STRAP, 18 GA |
| A15A1W21 | 176–0120–00 | WIRE STRAP, 18 GA |

## SCHEMATIC CHANGES

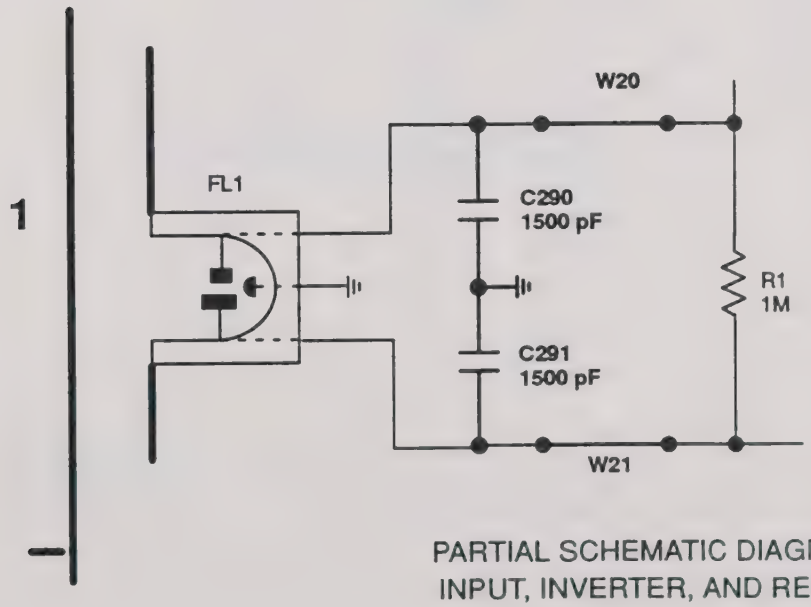


PARTIAL SCHEMATIC DIAGRAM 1, A15
INPUT, INVERTER, AND REGULATORS

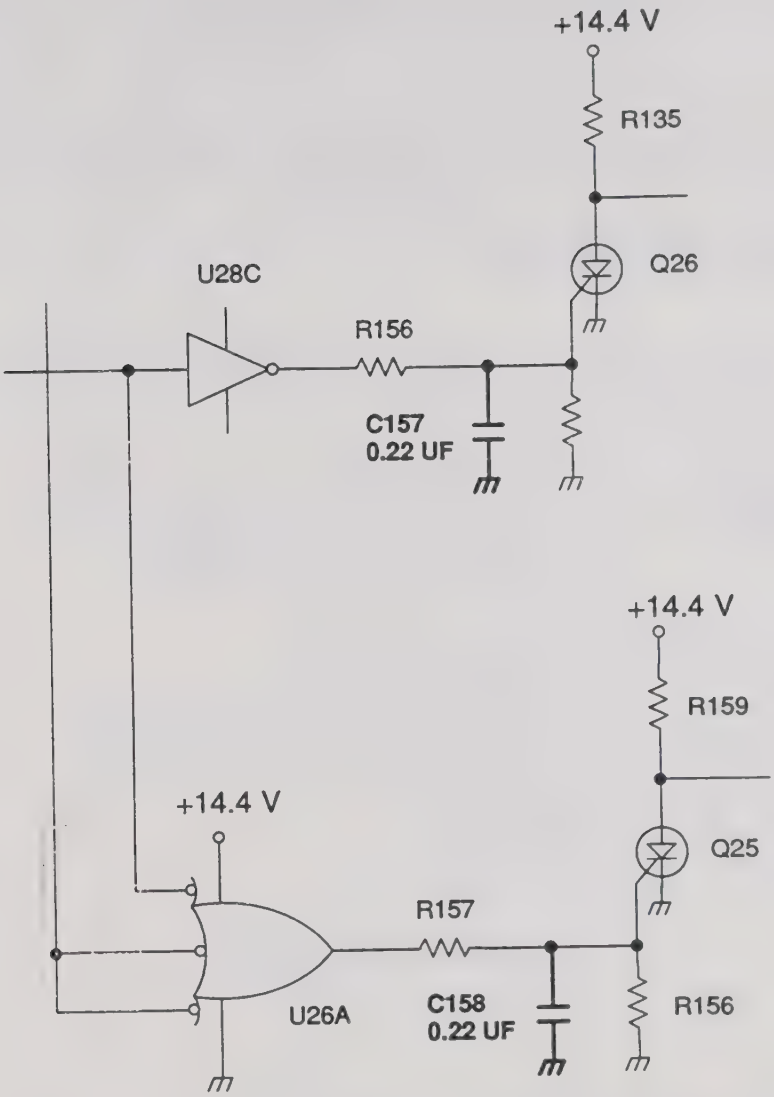


PARTIAL SCHEMATIC DIAGRAM 2, A15
ALARM SENSING AND LOGIC, FAN DRIVE

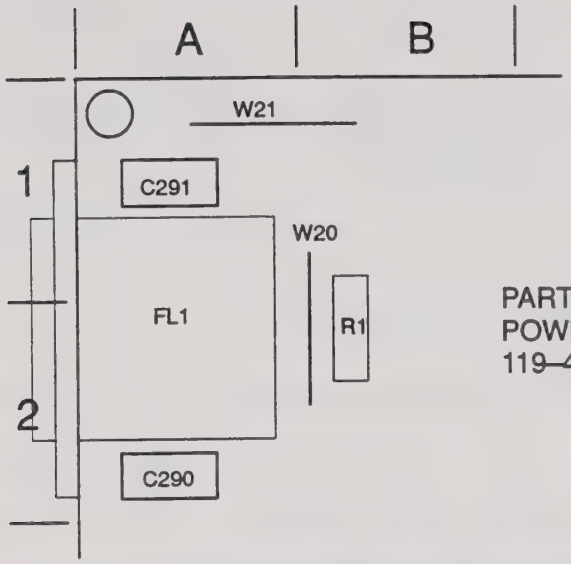


PARTIAL A15
POWER SUPPLY BOARD
119–4258–01

LOCATION GUIDE FOR C290, C291, W20, AND W21

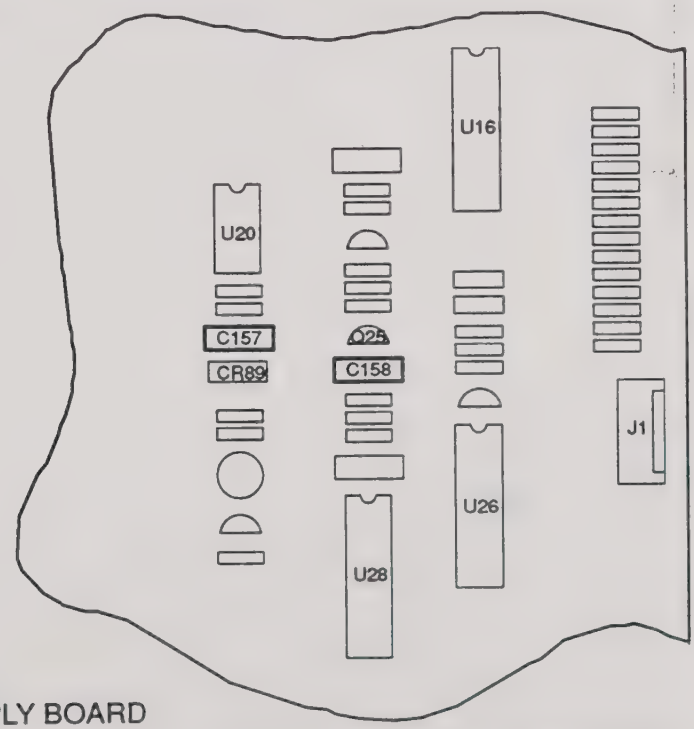


PARTIAL A15
POWER SUPPLY BOARD
119–4258–01

LOCATION GUIDE FOR C157 AND C158

| MANUAL CHANGE INFORMATION | Group Code 21 |
| --- | --- |
| Date: 5–17–93 Change Reference: M79514 | |
| Manual Part No: 070–8165–00 | |
| DESCRIPTION | |

5. All VM700A with Board Assy [illegible] 670–8165–05 and higher. Starting serial number B010[illegible]

## PREL CHANGE ELECTRICAL PARTS LIST CHANGES

Change the replaceable parts list to read:

| Component No. | Tektronix Part No. | Name and Description |
| --- | --- | --- |
| | [illegible] | PC BOARD ASSEMBLY:INT 116/230 AT–60 HZ OUT 5V 40A, 15V 3A |
| | [illegible] | SW 5.5 A –5.2V 2A VAR FAN OUT |
| | 150–1160–00 | DIODE,OPTO:LED,ORG |
| | 150–1160–00 | DIODE,OPTO:LED,GRN |
| | 150–1160–00 | DIODE,OPTO:LED,[illegible] |
| | 150–[illegible] | [illegible] |
| | [illegible] | [illegible] |
| | [illegible] | [illegible] |
| | [illegible] | [illegible] |
| | [illegible] | [illegible] |
| | [illegible] | [illegible] |
| | 150–1160–00 | [illegible] |

Tektronix

MANUAL CHANGE INFORMATION

Group Code 21

Date: 5–17–93 Change Reference: M79614

Product: VM700A Video M[illegible]ement Set Service Manual Manual Part No: 070–8165–00

DESCRIPTION

EFF. All VM700A with A15 Board Assy Number 119–4258–03 and higher. Starting serial number B040563. Exception: B040567.

## REPLACEABLE ELECTRICAL PARTS LIST CHANGES

**Change the replaceable parts list to read:**

| Component Nr. | Tektronix Part No. | Name and Description |
|---|---|---|
| A15 | 119–4258–03 | POWER SUPPLY:IN 115/230 47–63 HZ, OUT 5V 40A, 15V 3A 12V 2.5 A, –5.2V 2A,VAR FAN OUT 12–24V |
| A15A1DS2 | 150–1160–00 | DIODE,OPTO:LED,GREEN |
| A15A1DS3 | 150–1160–00 | DIODE,OPTO:LED,GREEN |
| A15A1DS4 | 150–1160–00 | DIODE,OPTO:LED,GREEN |
| A15A1DS5 | 150–1160–00 | DIODE,OPTO:LED,GREEN |
| A15A1DS6 | 150–1160–00 | DIODE,OPTO:LED,GREEN |
| A15A1DS7 | 150–1171–00 | DIODE,OPTO:LED,RED |
| A15A1DS8 | 150–1171–00 | DIODE,OPTO:LED,RED |
| A15A1DS9 | 150–1171–00 | DIODE,OPTO:LED,RED |
| A15A1DS10 | 150–1171–00 | DIODE,OPTO:LED,RED |
| A15A1DS11 | 150–1160–00 | DIODE,OPTO:LED,GREEN |

Contents printed on recyclable paper. Please recycle.